Installer manual

Exhaust air heat pump

NIBE S735 Stainless, 3x400 V, 3x230 V



IHB EN 2647-4
M13212

Quick guide

NAVIGATION

Select



Most options and functions are activated by lightly pressing on the display with your finger.

Scroll

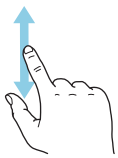

If the menu has several sub-menus, you can see more information by dragging up or down with your finger.

Browse

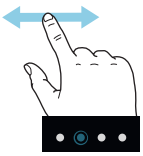

The symbols at the bottom edge show if there are more pages.

Drag to the right or left with your finger to browse between the pages.

Smartguide

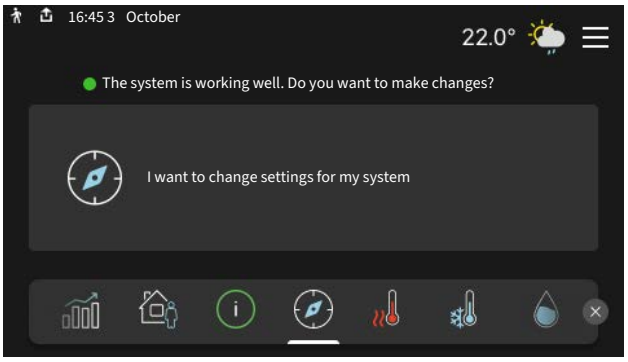

Smartguide helps you both to view information about the current status and to make the most common settings easily. The information that you see depends on the product you have and the accessories that are connected to the product.

Setting the indoor temperature.



Here, you can set the temperature in the installation's zones.

Increasing hot water temperature

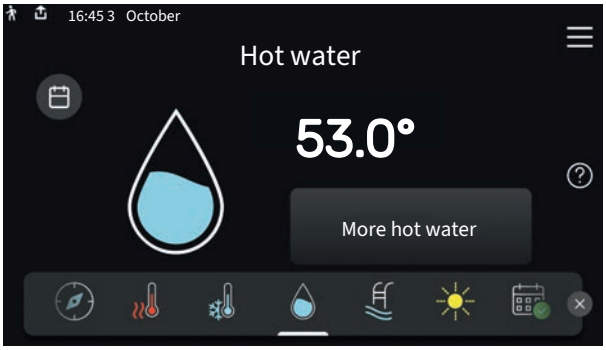

Here, you can start or stop a temporary increase in the hot water temperature.

Product overview

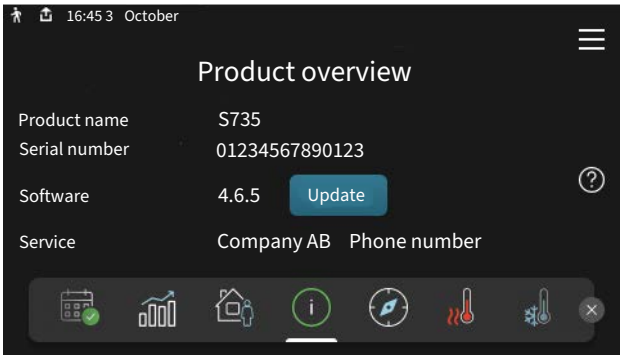

Here, you can find information about the product name, the product's serial number, the version of the software and contact details for the company that is supplying service. When a software update is available, you can start the update here (provided that S735 is connected to myUplink).

Table of Contents

1 Important information 4
Safety information 4
Symbols 4
Marking 4
Serial number 4
Inspection of the installation 5

2 Delivery and handling 6
Transport 6
Assembly 6
Supplied components 7
Handling panels 7
Removing insulation 9
Separated/one unit 9

3 The heat pump design 10
General 10
Distribution boxes 12
Air treatment section 12

4 Pipe and ventilation connections 13
General pipe connections 13
Dimensions and pipe connections 14
Symbol key 15
Climate system 15
Cold and hot water 15
Installation alternative 15
General ventilation connection 17
Ventilation flow 18
Adjusting ventilation 18
Dimensions and ventilation connections 18

5 Electrical connections 19
General 19
Connections 21
Settings 27

6 Commissioning and adjusting 28
Filling and venting 28
Start-up and inspection 29
Setting the heating curve 30

7 myUplink 32
Specification 32
Connection 32
Range of services 32
myUplink PRO 32

8 Control - Introduction 33
Display unit 33
Navigation 34
Menu types 34
Climate systems and zones 36
Update the software 36

9 Control - Menus 37
Menu 1 - Indoor climate 37
Menu 2 - Hot water 41
Menu 3 - Info 43
Menu 4 - My system 44
Menu 5 - Connection 47
Menu 6 - Scheduling 48
Menu 7 - Installer settings 50

10 Service 57
Maintenance 57
Service actions 57

11 Disturbances in comfort 61
Info-menu 61
Manage alarm 61
Troubleshooting 61

12 Accessories 64

13 Technical data 66
Dimensions 66
Technical specifications 68
Energy labelling 72
Electrical circuit diagram 75

Item register 89

Contact information 91

Important information

Safety information

This manual describes installation and service procedures for implementation by specialists.

The manual must be left with the customer.

For the latest version of the product's documentation, see nibe.eu.

> **CAUTION!**
>
> Read the enclosed safety manual before installation or servicing.

Symbols

Explanation of symbols that may be present in this manual.

> **WARNING!**
>
> This symbol indicates serious danger to person or machine.

> **CAUTION!**
>
> This symbol indicates danger to person or machine.

> **NOTE!**
>
> This symbol indicates important information about what you should consider when installing or servicing the installation.

> **TIP!**
>
> This symbol indicates tips on how to facilitate using the product.

Marking

Explanation of symbols that may be present on the product's label(s).

Fire hazard!

Dangerous voltage.

Read the User Manual.

Read the Installer Manual.

Disconnect the voltage supply before starting work.

Serial number

The serial number can be found at the bottom right on S735, in the display on the home screen "Product overview" and on the type plate (PZ1).

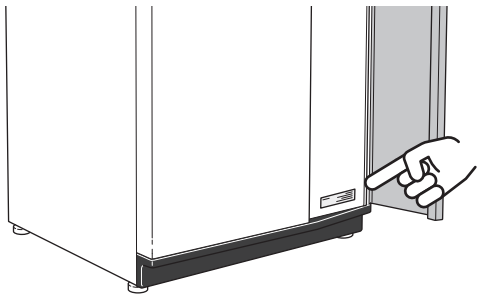

> **NOTE!**
>
> You need the product's (14 digit) serial number for servicing and support.

Inspection of the installation

Current regulations require the heating installation to be inspected before it is commissioned. The inspection must be carried out by a suitably qualified person. In addition, fill in the page for the installation data in the User Manual.

✔	Description	Notes	Signature	Date
Ventilation (page 17)				
	Setting ventilation flow exhaust air			
	Connecting ground cables			
Heating medium (page 15)				
	System flushed			
	System vented			
	Pressure in the climate system			
Electricity (page 19)				
	Connections			
	Main voltage			
	Phase voltage			
	Fuses heat pump			
	Fuses property			
	Outside sensor			
	Room sensor			
	Current sensor			
	Safety breaker			
	Earth circuit-breaker			

Delivery and handling

Transport

S735 should be transported and stored vertically in a dry place.

Ensure that the heat pump cannot fall over during transport.

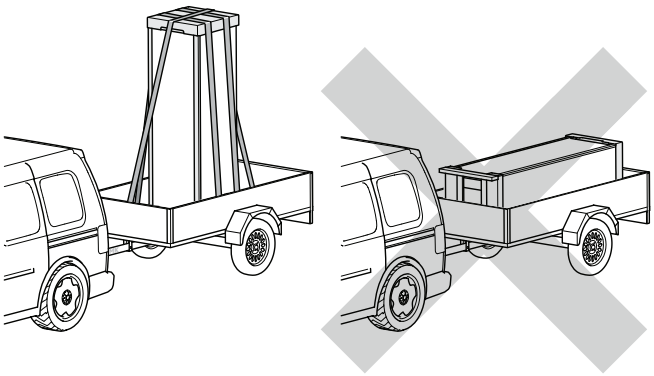

Check that S735 has not been damaged during transport.

However, the S735 can be carefully laid on its back when being moved into the building. The centre of gravity is in the top section.

Assembly

- Position S735 on a solid foundation indoors that withstands water and the weight of the product.
- Use the product's adjustable feet to attain a horizontal and stable set-up.

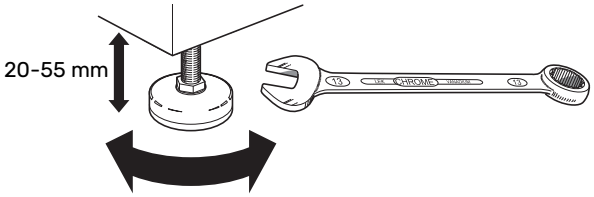

- Since water comes from S735, the area where S735 is located must be equipped with floor drainage.
- Because water comes from S735, the floor coating is important. A waterproof floor or floor membrane is recommended.
- Install with its back to an outside wall, ideally in a room where noise does not matter, in order to eliminate noise problems. If this is not possible, avoid placing it against a wall behind a bedroom or other room where noise may be a problem.
- Wherever the unit is located, walls to sound sensitive rooms should be fitted with sound insulation.
- Route pipes so they are not fixed to an internal wall that backs on to a bedroom or living room.
- The installation area always has to have a temperature of at least 10 °C and max. 30 °C.

INSTALLATION AREA

Leave a free space of 800 mm in front of the product. Leave free space between S735 and wall/other machinery/fittings/cables/pipes etc. It is recommended that a space of at least 10 mm is left to reduce the risk of noise and of any vibrations being propagated.

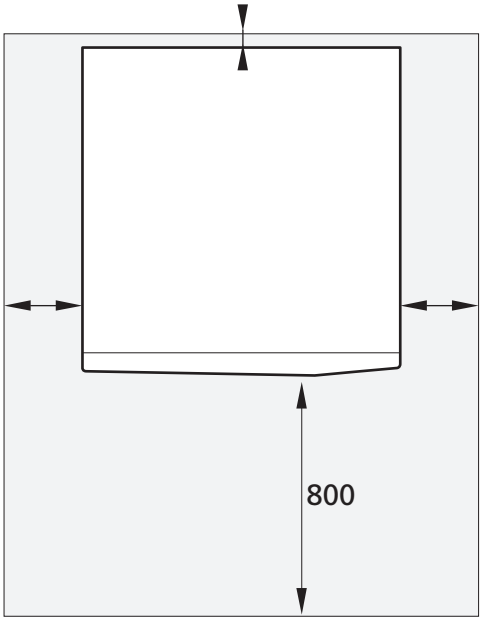

CAUTION!

To make connection of the ventilation ducts easier, approximately 300 mm of free space is required above S735.

Supplied components

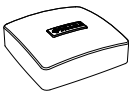

Outdoor temperature sensor (BT1)

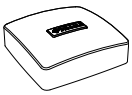

Room sensor(BT50)



Earth cabling (2 pcs)



Vent hose (length 4 m)

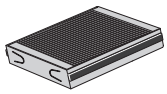

Extra air filter



Current sensor

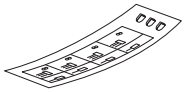

Label for external control voltage for the control system

LOCATION

The kit of supplied items is placed on top of the product.

Handling panels

OPEN FRONT HATCH

Press the hatch's top left corner to open it.

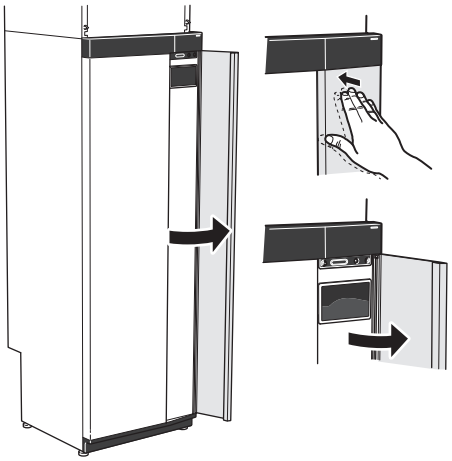

REMOVE THE AIR TREATMENT UNIT'S FRONT HATCH

Remove the air treatment unit's front hatch by pulling it straight out.

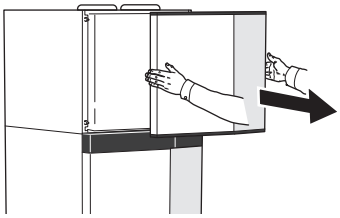

REMOVE THE FRONT HATCH

1. Remove the screw in the hole next to the on/off button (SF1).

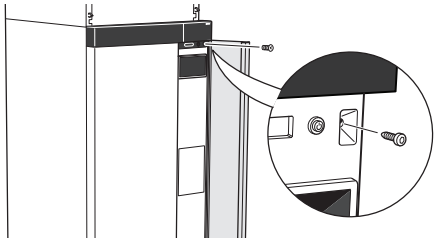

2. Pull the panel's top edge towards you and lift diagonally upwards to remove it from the frame.

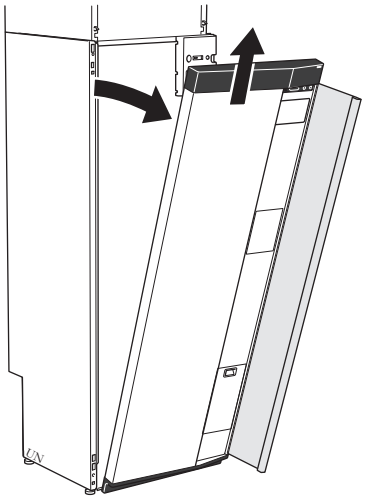

FIT THE FRONT HATCH

1. Hook one bottom corner of the front onto the frame.

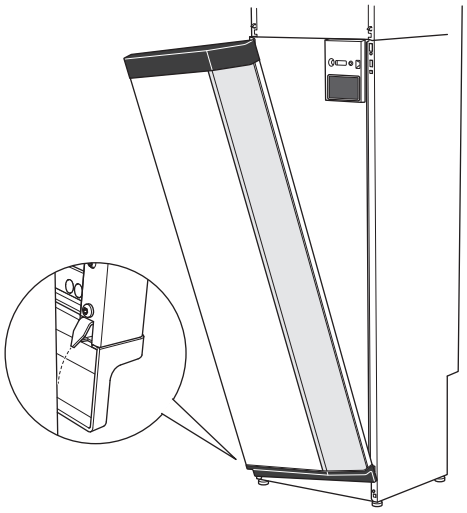

2. Hook the other corner in place.

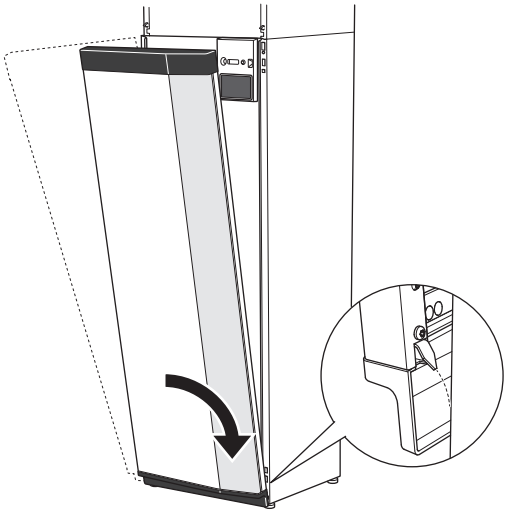

3. Check the display is straight. Adjust if necessary.

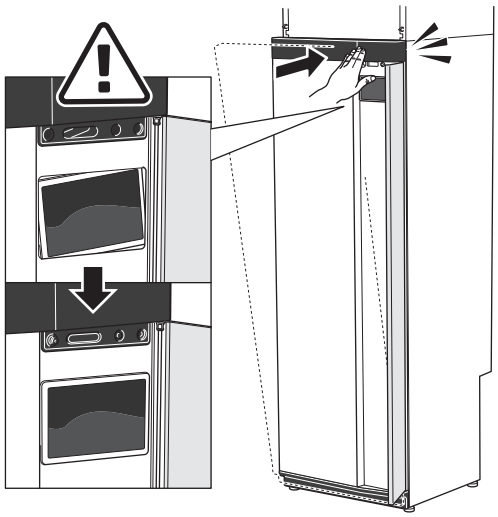

4. Press the top of the front section against the frame and screw it into place.

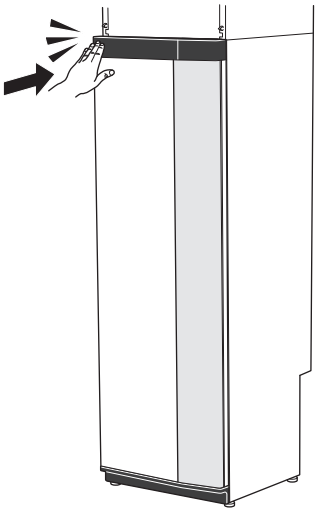

REMOVE SIDE PANELS

The side panels can be removed to facilitate the installation.

1. Remove the screws from the upper and lower edges.

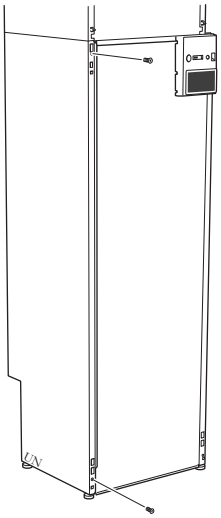

2. Turn the panel outwards slightly.

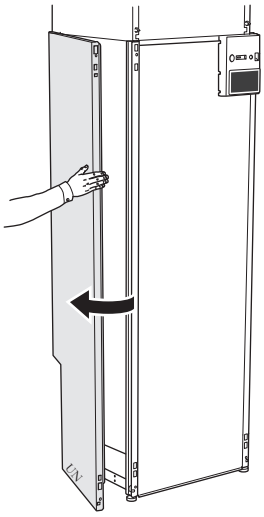

3. Move the panel outwards and backwards.

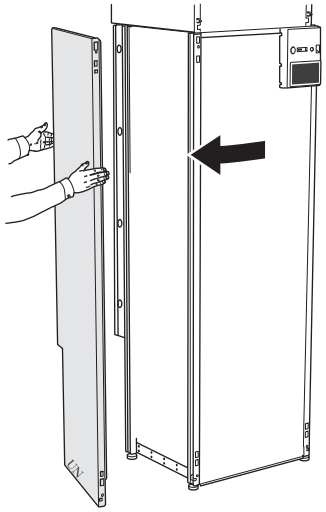

4. Assembly takes place in the reverse order.

REMOVE THE AIR TREATMENT UNIT'S SIDE PANELS

1. Undo the screw at the upper edge.

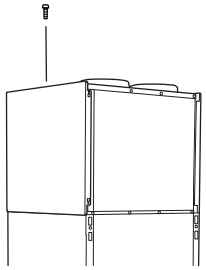

2. Move the panel upwards and outwards.

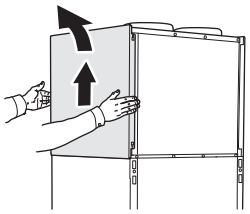

Removing insulation

The insulation can be removed to make installation easier.

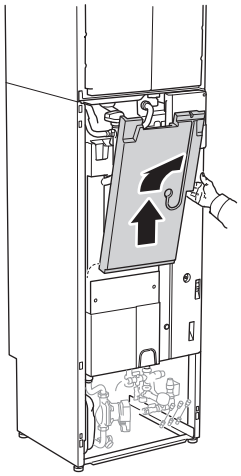

Separated/one unit

S735 is delivered as a unit and can be installed as one unit or separately. For separate installation, the accessory DKI S10 is required.

The images in this manual show S735 installed as one unit.



One unit



Separated installation

The heat pump design

General

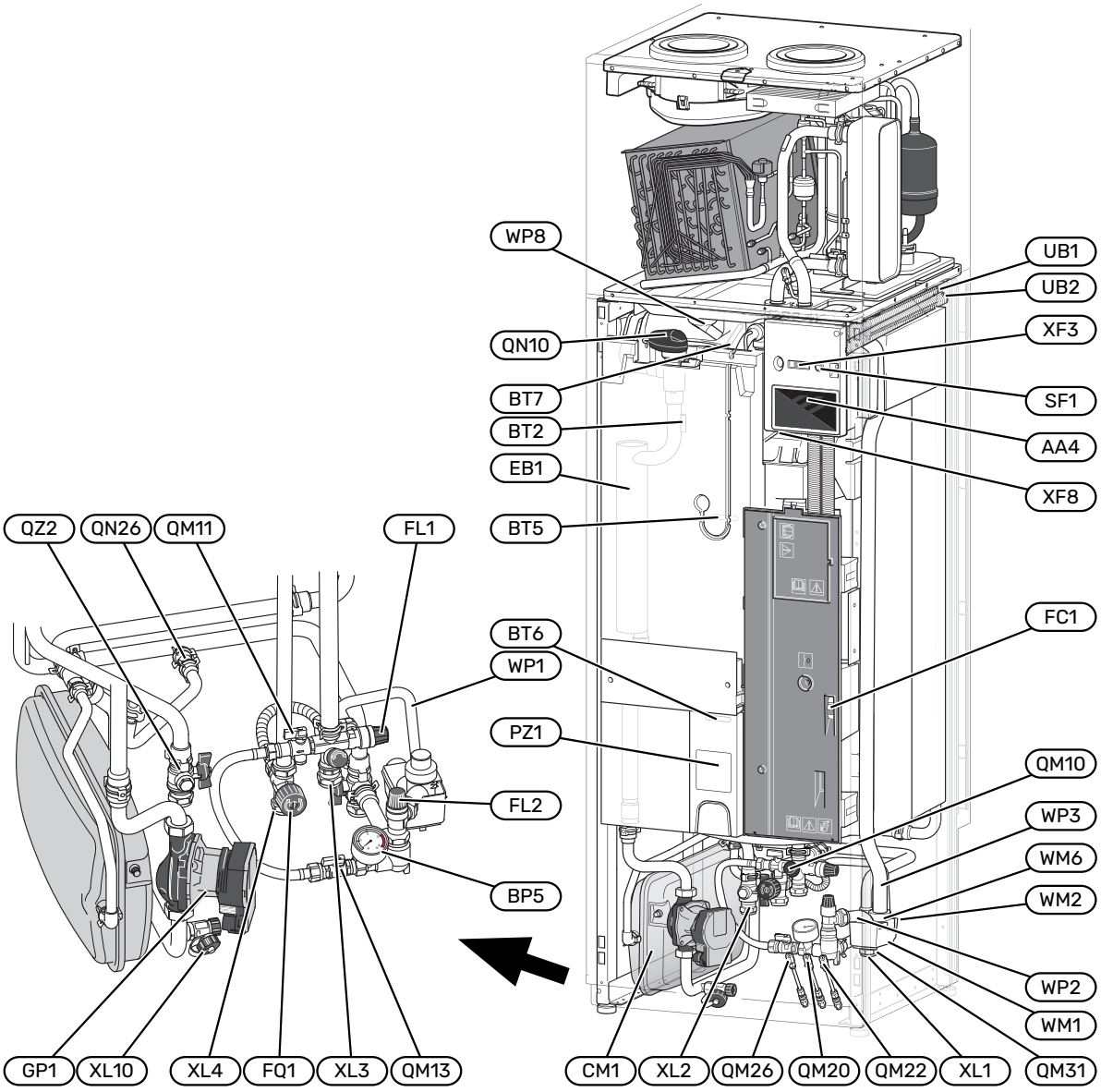

PIPE CONNECTIONS

XL1	Heating medium connection, supply line
XL2	Heating medium connection, return line
XL3	Cold water connection
XL4	Hot water connection
XL10	Drain connection, heating medium

HVAC COMPONENTS

CM1	Expansion vessel
FL1	Safety valve, water heater
FL2	Safety valve, climate system
FQ1	Mixer valve, hot water
GP1	Circulation pump
QM10	Filler valve, hot water heater
QM11	Filler valve, climate system
QM13	Filling valve 2, climate system
QM20	Vent valve, heating medium
QM22	Venting valve, coil
QM26	Vent valve, heating medium 2
QM31	Shut-off valve, heating medium supply line
QN10	Diverter valve, climate system/water heater
QN26	Overflow valve
QZ2	Filterball
WM1	Overflow cup
WM2	Overflow water discharge
WM6	Water seal
WP1	Overflow pipe, safety valve hot water heater
WP2	Overflow pipe, safety valve climate system
WP3	Condensation water hose
WP8	Connection for condensation water hose

SENSORS ETC.

BF1	Flow sensor (located on the rear of the product)
BP5	Pressure gauge, climate system
BT2	Flow line sensor
BT5	Controlling hot water sensor
BT6	Controlling hot water sensor
BT7	Display hot water sensor

ELECTRICAL COMPONENTS

AA4	Display unit
EB1	Immersion heater
FC1	Miniature circuit-breaker
SF1	On/off button
XF3	USB socket
XF8	Network connection for myUplink

MISCELLANEOUS

PZ1	Rating plate
UB1-2	Cable gland

Designations according to standard EN 81346-2.

Distribution boxes

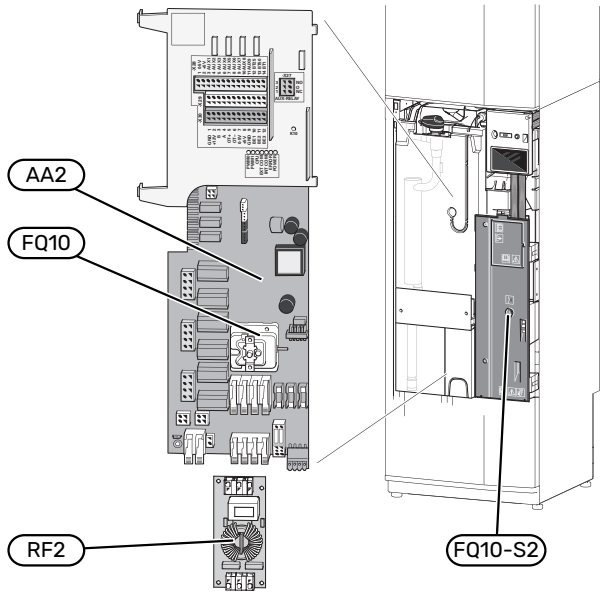

ELECTRICAL COMPONENTS

AA2	Base card
FQ10	Temperature limiter
	FQ10-S2 Reset button for temperature limiter
RF2	EMC card

Air treatment section

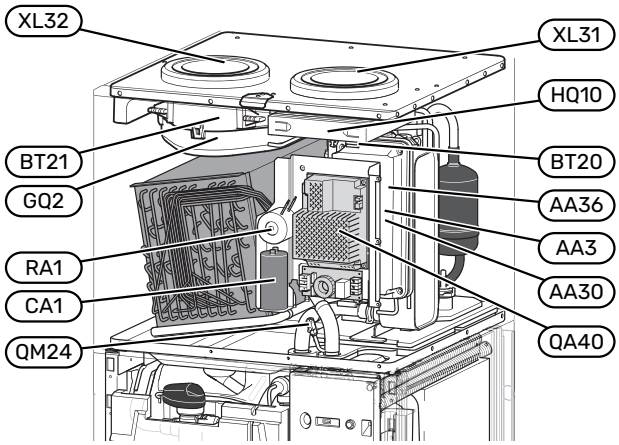

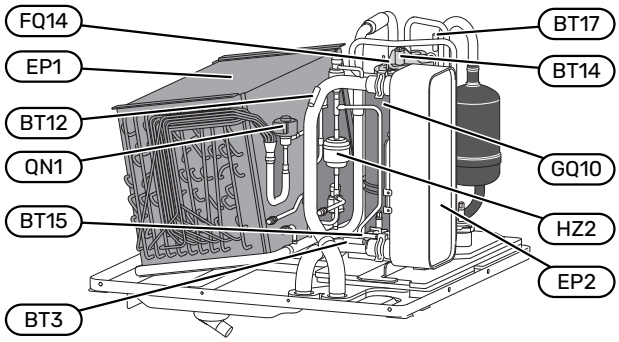

VENTILATION CONNECTIONS

XL31	Exhaust air connection
XL32	Extract air connection

HVAC COMPONENTS

QM24	Vent valve, heat exchanger

SENSORS ETC.

BT3	Return line sensor
BT12	Supply temperature sensor after condenser
BT14	Hot gas sensor
BT15	Fluid line sensor
BT17	Suction gas sensor
BT20	Exhaust air sensor
BT21	Extract air sensor

ELECTRICAL COMPONENTS

AA3	Input board[1]
AA30	Safety board (SFT board)[1]
AA36	Measurement board[1]
CA1	Capacitor
FQ14	Temperature limiter, compressor
QA40	Inverter
RA1	Choke

[1] Not visible in the image

COOLING COMPONENTS

EP1	Evaporator
EP2	Condenser
GQ10	Compressor
HZ2	Drying filter
QN1	Expansion valve

VENTILATION

GQ2	Exhaust air fan
HQ10	Exhaust air filter

Pipe and ventilation connections

General pipe connections

Pipe installation must be carried out in accordance with current norms and directives.

The system requires the radiator circuit to be designed for a low temperature heating medium. At the lowest dimensioned outdoor temperature (DOT) the highest recommended temperatures are 55 °C on the supply line and 45 °C on the return line.

NOTE!

Ensure that incoming cold water is clean. When using a private well, it is important to take a water sample. Depending on the water quality, it may be necessary to supplement with an extra water filter.

CAUTION!

The pipe installation has to be flushed clean before the product is connected, to prevent any contaminants from damaging the components. If there is a risk that magnetite may be present, a magnetite filter should be installed.

CAUTION!

Water may drip from the safety valve. A factory-fitted overflow pipe runs from the safety valve to an overflow cup. An overflow pipe has to be routed from the overflow cup to a suitable drain. The overflow pipe must be inclined along its entire length to prevent pockets where water can accumulate, and must be frost-proof.

SYSTEM VOLUME

S735 is equipped with an expansion vessel (CM1).

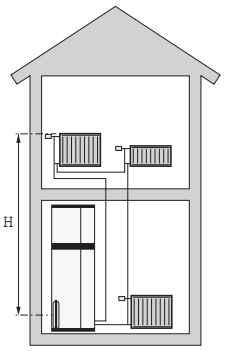

The volume of the expansion vessel is 10 litres and it is pre-pressurised as standard to 0.5 bar. As a result, the maximum permitted height "H" between the expansion vessel and the highest installed radiator is 5 m, see figure.

If the pre-pressure is not high enough, it can be increased by filling with air via the valve in the expansion vessel. Any change in the pre-pressure affects the ability of the expansion vessel to handle the expansion of the water.

The maximum system volume, excluding S735, is 285 litres at the above-mentioned pre-pressure.

SYSTEM DIAGRAM

S735 consists of a heat pump, water heater, immersion heater, fan, circulation pump and control system. S735 is connected to the ventilation system and the climate system.

When the room temperature exhaust air, and in certain cases outdoor air, passes through the evaporator, the refrigerant evaporates because of its low boiling point. In this way, the energy in the air is transferred to the refrigerant.

The refrigerant is then compressed in the compressor, causing the temperature to rise considerably.

The warm refrigerant is led to the condenser. Here, the refrigerant gives off its energy to the climate system's water, whereupon the refrigerant changes state from gas to liquid.

The refrigerant then goes via filters to the expansion valve, where the pressure and temperature are reduced.

The refrigerant has now completed its circulation and returns to the evaporator.

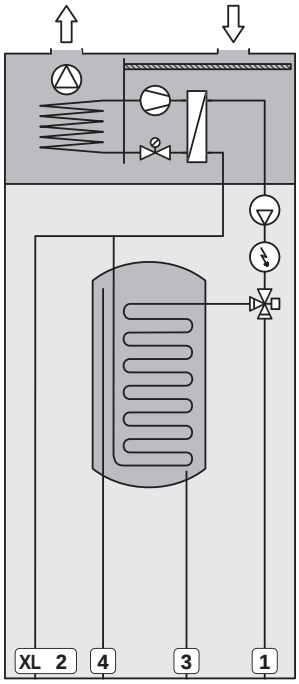

Pipe connections

XL1	Heating medium connection, supply line
XL2	Heating medium connection, return line
XL3	Cold water connection
XL4	Hot water connection
XL10	Drain connection, heating medium

NOTE!

This is a principle of operation. For more detailed information about S735, see section "The heat pump design".

Dimensions and pipe connections

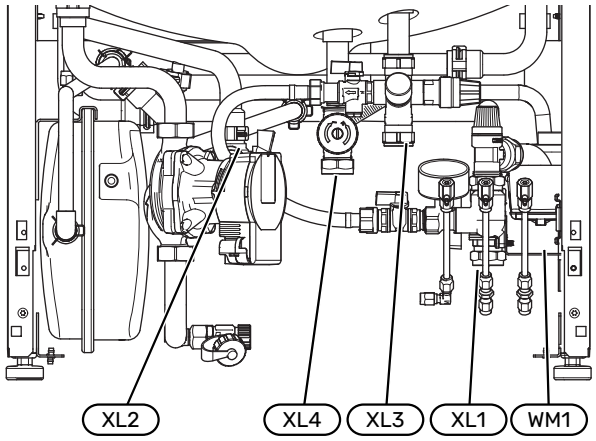

The overflow cup (WM1) can be turned, allowing the pipe to be pointed forwards or backwards to simplify connection to the drain.

SETTING OUT DIMENSIONS

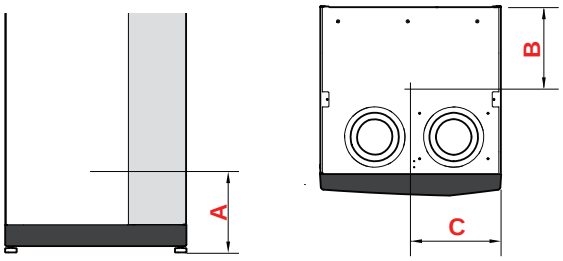

Connection		A	B	C
XL1 Heating medium supply	(mm)	115	280	105
XL2 Heating medium return	(mm)	180	275	370
XL3 Cold water	(mm)	250	445	195
XL4 Hot water	(mm)	225	400	265
WM1 Overflow cup	(mm)	185	280	50

PIPE DIMENSIONS

Connection		
XL1-XL2 Heating medium ext Ø	(mm)	22
XL3 Cold water ext Ø	(mm)	22
XL4 Hot water ext Ø	(mm)	22
WM2 Overflow water discharge	(mm)	32

Symbol key

Symbol	Meaning
	Unit box
	Non-return valve
	Mixing valve
	Circulation pump
	Immersion heater
	Temperature sensor
	Trim valve
	Diverter valve/shunt
	Overflow valve
	Heat pump
	Heating system
	Heating system with lower temperature
	Domestic hot water
	Hot water circulation

Climate system

A climate system is a system that regulates the indoor temperature with the help of the control system in S735 and the heating medium circuit's radiators, under floor heating, fan coils, etc.

CONNECTING THE CLIMATE SYSTEM

Install as follows:

- When connecting to a system with thermostats, either a bypass valve must be fitted or, alternatively, some of the thermostats must be removed to ensure there is sufficient flow and heat emission.

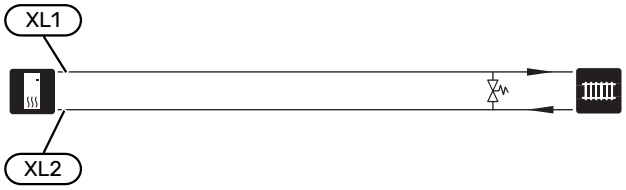

Cold and hot water

The settings for hot water are made in menu 7.1.1 - "Hot water".

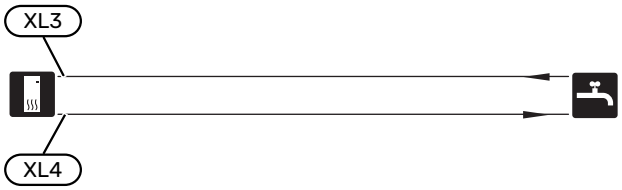

Installation alternative

S735 can be installed in several different ways, some of which are shown here.

Further option information is available at nibe.eu and in the respective assembly instructions for the accessories used. See page 64 for a list of the accessories that can be used with S735.

EXTRA CLIMATE SYSTEM

In a property with several climate systems that require different supply temperatures, the accessory ECS 40/ECS 41 can be connected.

A shunt valve then lowers the temperature to the underfloor heating system, for example.

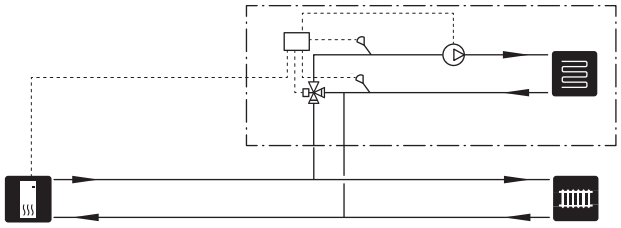

EXTRA HOT WATER HEATERS

The system should be supplemented with an extra water heater/heat pump water heater, if a large bath tub or other significant consumer of hot water is installed.

Water heater/heat pump water heater without immersion heater

In water heaters/heat pump water heaters without an immersion heater, the water is heated by the heat pump.

The water heater/heat pump water heater is connected upstream of S735.

Some water heaters/heat pump water heaters require pipe routing behind the products, which requires 60 mm of free space to the wall.

For connection, a docking kit DEW is required.

DEW S42 means that S735 can be connected to the heat pump water heater VPB S200.

DEW S43 means that S735 can be connected to the heat pump water heater AHPH S/AHPS S/VPB S300/VPBS S300.

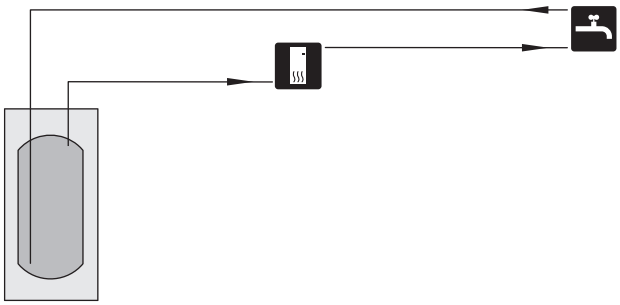

Water heater with immersion heater

In a water heater with an immersion heater, the water is initially heated by the heat pump. The immersion heater in the water heater is used for keeping warm and when the heat pump does not have sufficient power.

The water heater's flow is connected after S735.

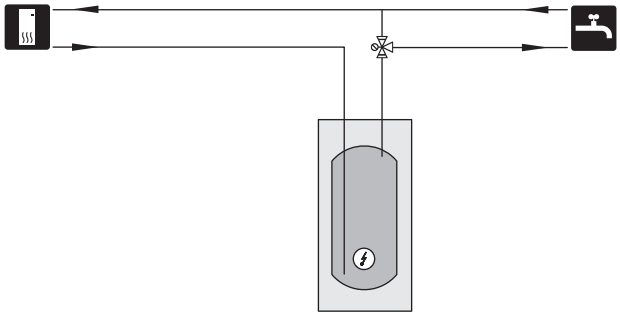

HOT WATER CIRCULATION

A circulation pump can be controlled by S735 to circulate the hot water. The circulating water must have a temperature that prevents bacterial growth and scalding. National standards must be met.

The HWC return is connected to a freestanding water heater.

The circulation pump is activated via the AUX output in menu 7.4 -"Selectable in/outputs".

HWC can be supplemented with a hot water sensor for HWC (BT70) and (BT82), which is connected via the AUX input and activated in menu 7.4 -"Selectable in/outputs".

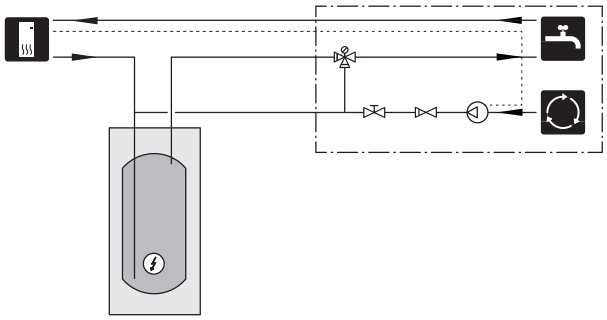

General ventilation connection

- Ventilation installation must be carried out in accordance with current norms and directives.
- Provision must be made for inspection and cleaning of the duct.
- Make sure that there are no reductions of cross-sectional area in the form of creases, tight bends, etc., since this will reduce the ventilation capacity.
- The air duct system must have a minimum air tightness class of B (EN 12237).

EXTRACT AIR DUCT

- The extract air duct has to be insulated with diffusion-proof material along its entire length.
- Ensure that the condensation insulation is fully sealed at any joints and/or at lead-in nipples, silencers, roof cowls or similar.

> **CAUTION!**
>
> S735 occasionally has a very low extract air temperature (see section "Technical specifications"). To avoid damaging the product and/or the property, it is therefore important that the extract air duct is insulated with diffusion-proof material along its entire length.

- A duct in a masonry chimney stack must not be used for extract air.
- The extract air duct must be a maximum of 20 m long with a maximum of six bends.
- Because the heat pump contains a flammable refrigerant, the air ducting system must be earthed. This is done by making a good electrical connection to the air ducts using the enclosed earth cables (2). The cables must then be connected to the earth pins on top of the top cover.
- The extract air duct should, if possible, be routed up through the roof; if this is not possible, the duct can be routed out through an external wall.
- A wall lead-in designed for the purpose must be used to avoid moisture on the facade.
- Ensure that the position of the wall lead-in and the air flowing out do not cause inconvenience at, for example, an entrance, patio or similar.
- In cases where the extract air duct from several S735 is connected to a larger, common duct, for example in apartment buildings with a S735 in each dwelling, local regulations regarding protection against the spread of fire must be complied with.

SILENCER

- To prevent fan noise being transferred to the ventilation devices, install silencers in suitable locations in the duct system.
- Noise from the fan can be transferred via the extract air duct. To prevent disruptive noise being transferred outside the property, the correct type and size of silencer must be installed.

  The noise level varies with the selected fan curve. For more detailed sound data, including sound to channels, visit nibe.eu.

VENTILATION CONNECTIONS

S735 has two sizes of ventilation connection, 125 mm or 160 mm.

On delivery, the ventilation connections have the smaller dimension; if the larger dimension is required, the insulation rings placed in the connections must be removed.

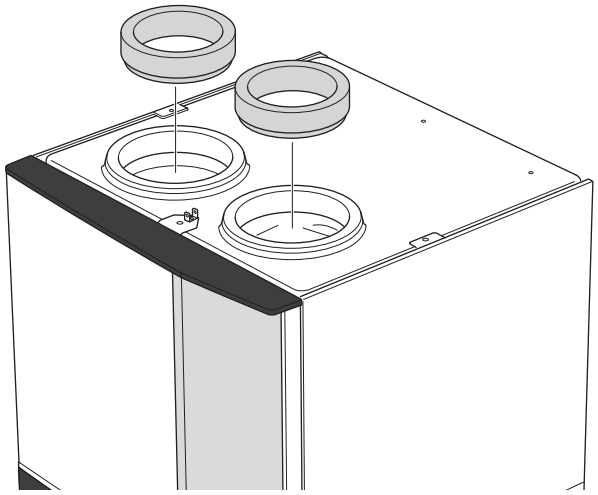

Connect the heat pump to the duct system by installing a nipple (not enclosed) or other ventilation component in the ventilation connections.

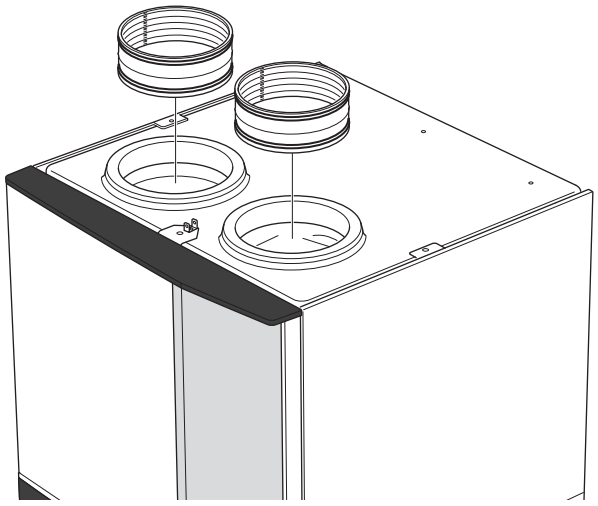

EXHAUST AIR DUCT /KITCHEN FAN

Exhaust air duct (kitchen fan) must not be connected to S735.

To prevent cooking odours from being led to the S735, the distance between the kitchen fan and the exhaust air valve must be taken into consideration. The distance must not be less than 1.5 m, but may vary between different installations.

Always use a kitchen fan when cooking.

Ventilation flow

Connect S735 so that all the exhaust air, except kitchen duct air (kitchen fan), passes through the evaporator (EP1) in the heat pump.

The ventilation flow must comply with the applicable national standards.

For the heat pump to work optimally, a given ventilation flow is required. For the min. air flow, see technical specifications.

Set the ventilation capacity in the heat pump's menu system (menu 7.1.4 - "Ventilation").

If the exhaust air temperature falls below 10 °C, the compressor is blocked and electric additional heat is permitted. No energy is recovered from the exhaust air when the compressor is blocked.

Adjusting ventilation

To obtain the necessary air exchange in every room of the property, the exhaust air valves must be correctly positioned and adjusted and the fan in the heat pump adjusted.

Immediately after installation adjust the ventilation so that it is set according to the projected value of the property.

Incorrect adjustment of the ventilation may lead to reduced installation efficiency and thus poorer operating economy, a poorer indoor climate and moisture damage in the property.

Dimensions and ventilation connections

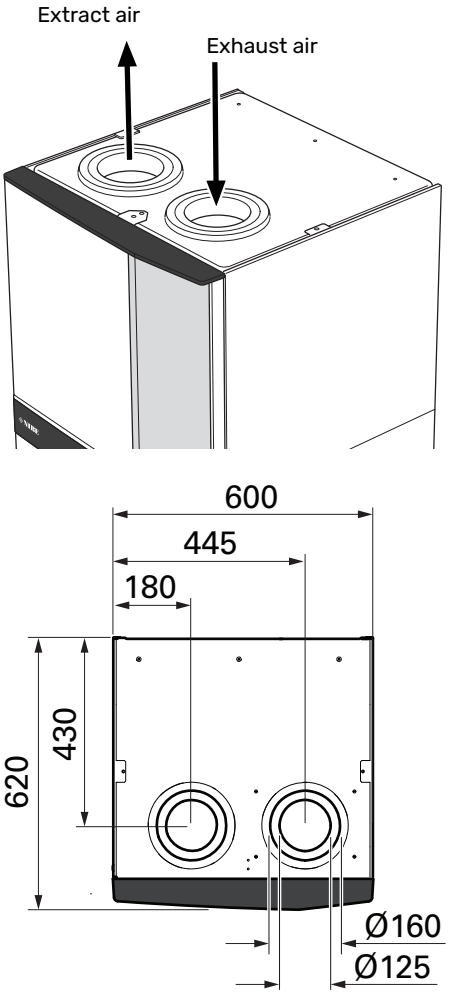

Electrical connections

General

All electrical equipment, except the outdoor sensors, room sensors and the current sensors are ready connected at the factory.

- Electrical installation and wiring must be carried out in accordance with national provisions.
- Disconnect S735 before insulation testing the house wiring.
- S735 must be fitted with a RCD (residual current device). A separate residual current device is recommended.
- S735 must be installed via an isolator switch. The cable area has to be dimensioned based on the fuse rating used.
- If a miniature circuit breaker is used, this must have at least triggering characteristic "C". See section "Technical specifications" for fuse size.
- To prevent interference, communication cables to external connections must not be laid in the vicinity of high voltage cables.
- The minimum area of communication and sensor cables to external connections must be 0.5 mm² up to 50 m, for example EKKX, LiYY or equivalent.
- For an electrical wiring diagram for S735, see the "Technical specifications" section.
- When routing a cable into S735, the cable grommets (UB1) and (UB2) must be used.

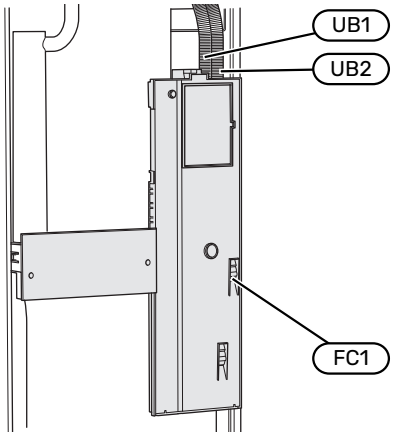

> **CAUTION!**
>
> Electrical installation and any servicing must be carried out under the supervision of a qualified electrician. Turn off the power with the circuit breaker before servicing.

> **CAUTION!**
>
> If the supply cable is damaged, only NIBE, its service representative or similar authorised person may replace it to prevent any danger and damage.

> **CAUTION!**
>
> Check the connections, main voltage and phase voltage before the product is started, to prevent damage to the heat pump electronics.

> **CAUTION!**
>
> Do not start the system before filling up with water. Components in the system could be damaged.

MINIATURE CIRCUIT-BREAKER

The operating circuit in S735 and some of its internal components are fused internally by a miniature circuit-breaker (FC1).

ACCESSIBILITY, ELECTRICAL CONNECTION

Removing the cover

The hatch is opened using a screwdriver.

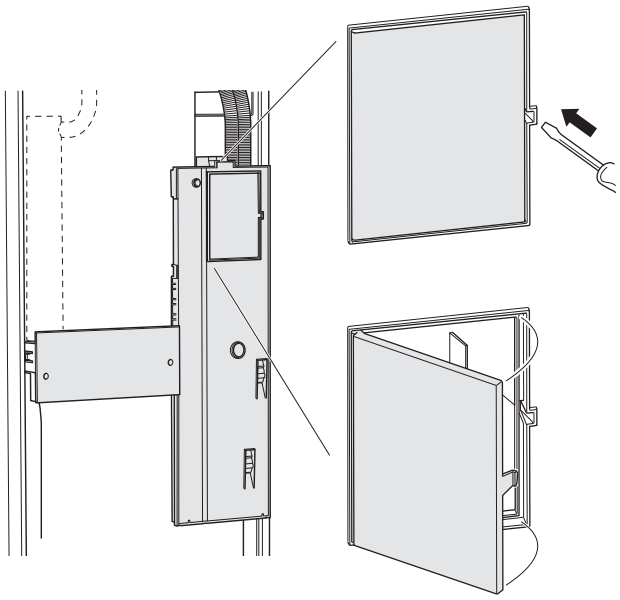

Removing the covers

The cover is opened using a screwdriver.

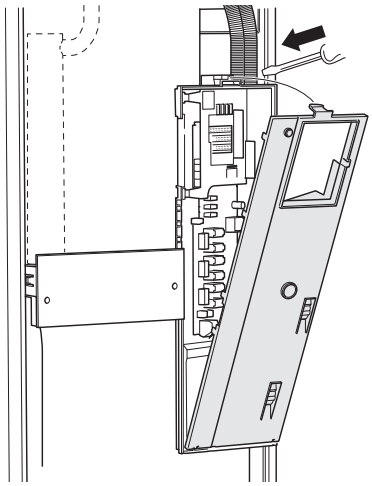

CABLE LOCK

Use a suitable tool to release/lock cables in the heat pump terminal blocks.

Terminal block

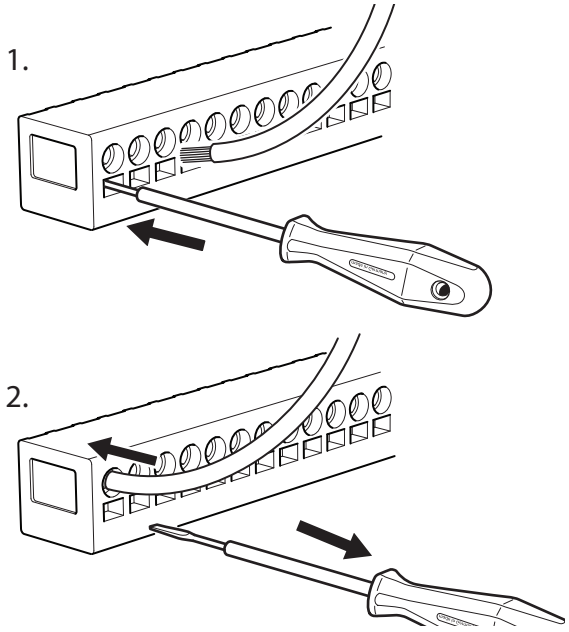

TEMPERATURE LIMITER

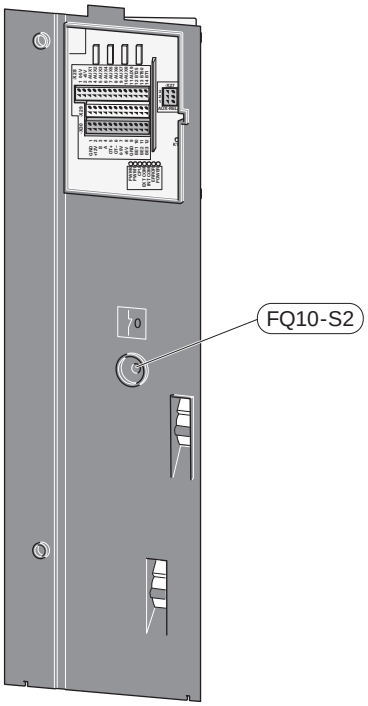

The temperature limiter (FQ10) cuts the voltage to the electric additional heat if the temperature rises above 89 °C and it is reset manually.

Connections

TERMINAL BLOCKS

The following terminal blocks are used on the base board (AA2).

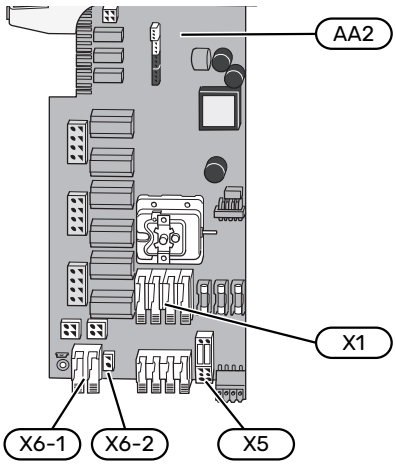

POWER CONNECTION

Supply voltage

Enclosed cable for incoming supply electricity is connected to terminal block X1 and X6-1 on the PCB (AA2).

Connection 3x230 V

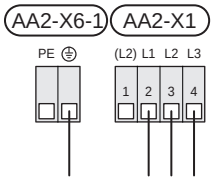

Connection 3x400 V

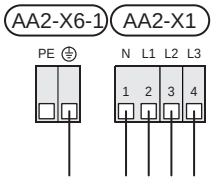

External control voltage for the control system

If the control system is to be powered separately from other components in S735 (e.g. for tariff control), a separate operating cable is connected.

> **CAUTION!**
>
> During service, all supply circuits must be disconnected.

1. Remove the bridges from terminal block AA2-X5.

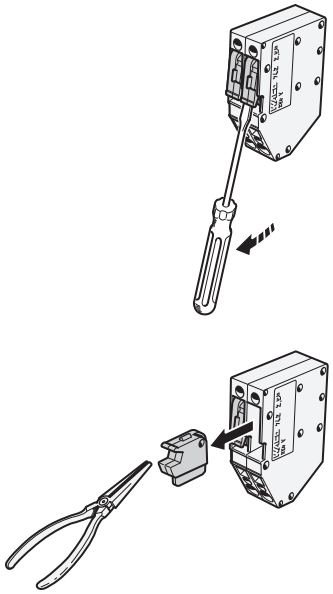

2. Connect control voltage (230 V ~ 50Hz) to AA2-X5:N, AA2-X5:L and AA2-X6-2 (PE).

Enclosed label

The enclosed label is placed on the electrical connection's cover.

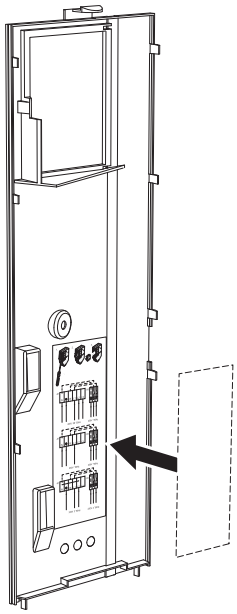

Tariff control

If the voltage to the immersion heater and/or compressor is lost for a period, "Tariff blocking" must be selected at the same time via the selectable inputs, see section "Selectable inputs".

EXTERNAL CONNECTIONS

Connect external connections on terminal blocks X28, X29 and X30 on the base board (AA2).

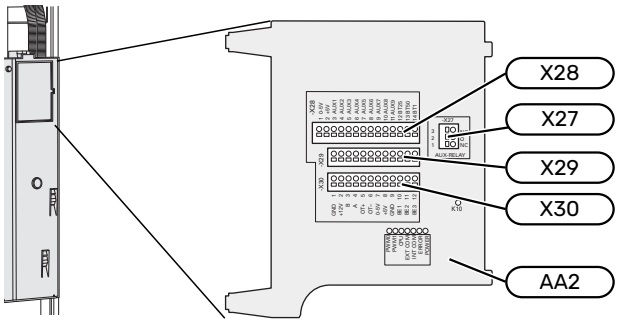

Sensors

Outside sensor

The outdoor temperature sensor (BT1) is placed in the shade on a wall facing north or north-west, so it is unaffected, for example, by the morning sun.

Connect the outdoor temperature sensor to terminal block AA2-X28:14 and AA2-X29:GND.

If a conduit is used it must be sealed to prevent condensation in the sensor capsule.

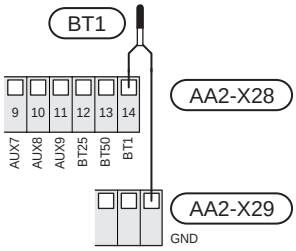

Room sensor

S735 is supplied with an enclosed room sensor (BT50) that makes it possible to display and control the room temperature in the display on S735.

S735 operates without the room sensor, but if you want to read the property's indoor temperature from the display on S735, the room temperature sensor must be fitted.

The room temperature sensor is installed in a neutral location where the set temperature is required. A suitable location might be, for example, on a free inner wall in a hall approx. 1.5 m above the floor. It is important that the room temperature sensor is not prevented from measuring the correct room temperature, for example by being located in a recess, between shelves, behind a curtain, above or close to a heat source, in a draught from an external door or in direct sunlight. Closed radiator thermostats can also cause problems.

Connect the room temperature sensor to terminal blocks AA2-X28:13 and AA2-X29:GND.

If a room sensor is to be used to change the room temperature in °C and/or to fine-tune the room temperature, the sensor must be activated in menu 1.3 - "Room sensor settings".

If a room sensor is used in a room with underfloor heating, it should only have an indicatory function, not control of the room temperature.

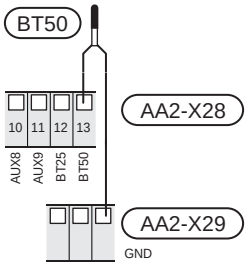

> **NOTE!**
>
> Changes of temperature in the property take a long time. For example, short periods of time combined with under floor heating will not give a noticeable difference in room temperature.

External supply temperature sensor

If an external supply temperature sensor (BT25) needs to be used, connect it to terminal block AA2-X28:12 and to terminal block AA2-X29:GND.

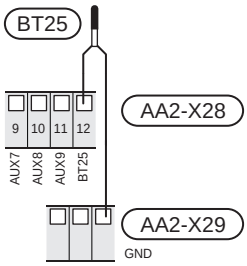

External return line sensor

Connect the external return line sensor (BT71) to terminal block AA2-X28:9 (or to one of the other selectable AUX inputs) and to terminal block AA2-X29:GND.

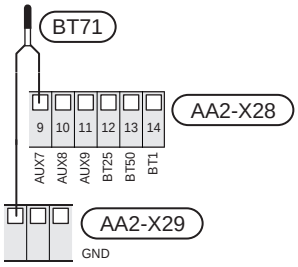

External electricity meter and energy meter

Up to two electricity meters (BE6, BE7) or energy meters for heating (BF2, BF3) can be connected to S735.

Activate the meter(s) in menu 7.2 - "Accessory settings" and then set the desired value ("Energy per pulse" or "Pulses per kWh") in menu 7.2.19 -"Pulse energy meter".

Electricity meter

Connect the electricity meters to terminal blocks AA2-X28:1-2 and AA2-X30:7-8.

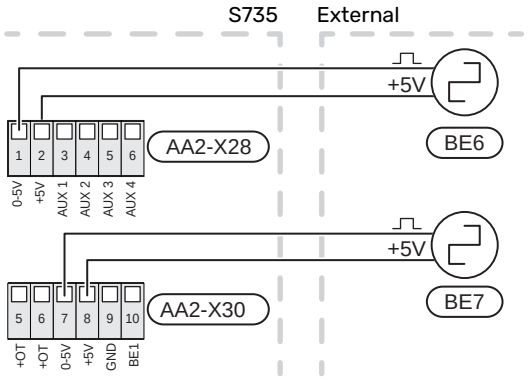

Energy meter

Connect the energy meters to terminal blocks AA2-X28:1-2 and AA2-X30:7-8 and to terminal block AA2-X29:GND.

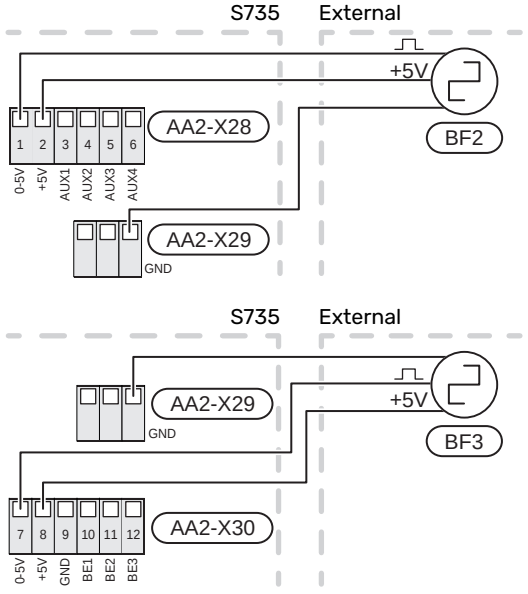

Load monitor

Integrated load monitor

S735 is equipped with a simple form of integrated load monitor, which limits the power steps for the electric additional heat by calculating whether future power steps can be connected to the relevant phase without exceeding the current for the specified main fuse.

If the current would exceed the specified main fuse, the power step is not permitted. The size of the property's main fuse is specified in menu 7.1.9 - "Load monitor".

Load monitor with current sensor

When many power-consuming products are connected in the property at the same time as the compressor and/or the electric additional heat is operating, there is a risk of the property's main fuses tripping.

S735 is equipped with a load monitor that, with the help of a current sensor, controls the power steps for the electric additional heat by redistributing the power between the different phases or, alternatively, disengages the electric additional heat step-by-step if there is an overload in a phase.

If the overload remains despite the electric additional heat being disengaged, the compressor is limited.

Reconnection occurs when the other current consumption is reduced.

The building's phases can have different loads. If the compressor has been connected to a heavily loaded phase, there is a risk that the compressor output will be restricted and the electric additional heat will operate longer than expected. This means that the savings will not be as expected.

Connection and activation of current sensors

1. Install a current sensor on each incoming phase conductor into the electrical distribution unit. This is best done in the electrical distribution unit.
2. Connect the current sensors to a multi-core cable in an enclosure directly adjacent to the electrical distribution unit. The multi-core cable between the enclosure and S735 must have a cable area of at least 0.5 mm².

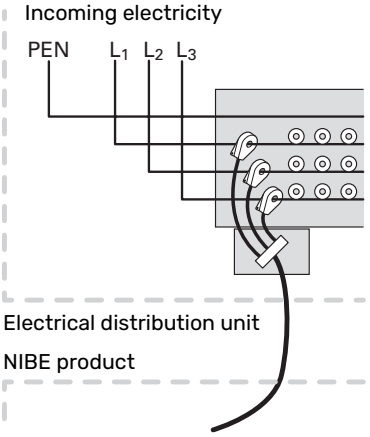

3. Connect the cable to terminal block AA2-X30:9-12, where X30:9 is the common terminal block for the three current sensors.

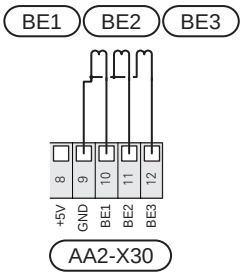

4. Specify the size of the property's main fuse in menu 7.1.9 - "Load monitor".
5. Activate phase detection in menu 7.1.9 - "Load monitor". Read more about phase detection in section "Menu 7.1.9 - Load monitor".

COMMUNICATION

Connecting accessories

Instructions for connecting accessories are provided in the manual accompanying the accessory. See section "Accessories" for a list of the accessories that can be used with S735. Connection for communication with the most common accessories is shown here.

Accessories with accessory board (AA5)

Accessories with accessory board (AA5) connect to terminal block AA2-X30:1, 3, 4 in S735.

If several accessories are to be connected, or are already installed, the boards are connected in series.

Because there can be different connections for accessories with accessory board (AA5), you should always read the instructions in the manual for the accessory that is to be installed.

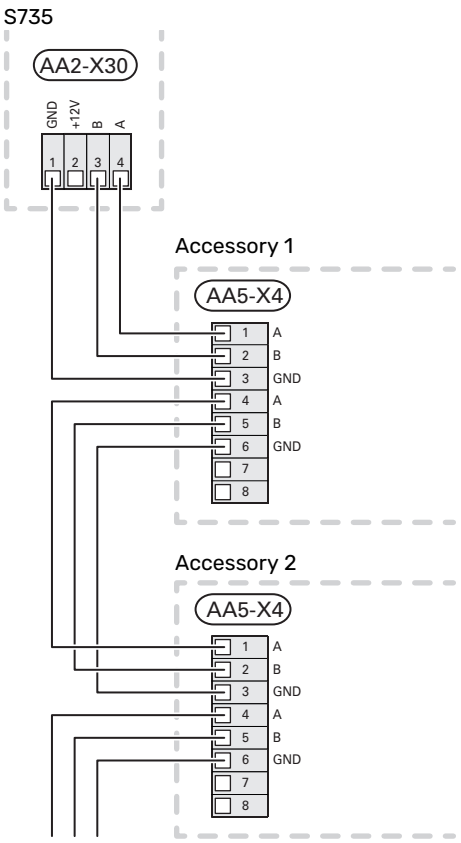

Network cable for myUplink (W130)

In instances when you want to connect to myUplink using a network cable instead of via wifi.

The network cable can be routed without removing the air treatment unit.

1. Connect the shielded network cable to the display.
2. Route the network cable to the top of the heat pump's heater unit.
3. Follow the flow meter's cable out at the rear.

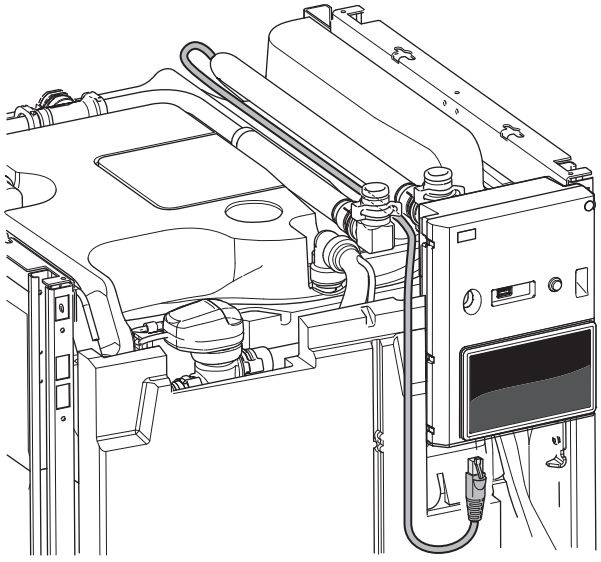

SELECTABLE OUTPUTS/INPUTS

S735 has software-controlled AUX inputs and outputs for connecting the external switch function (contact has to be potential-free) or sensor.

In menu 7.4 - "Selectable in/outputs", you select the AUX connection to which each function has been connected.

For certain functions, accessories may be required.

> **TIP!**
>
> Some of the following functions can also be activated and scheduled via menu settings.

Selectable inputs

Selectable inputs on the base board (AA2) for these functions are AA2-X28:3-11. Each function connects to any input and GND (AA2-X29).

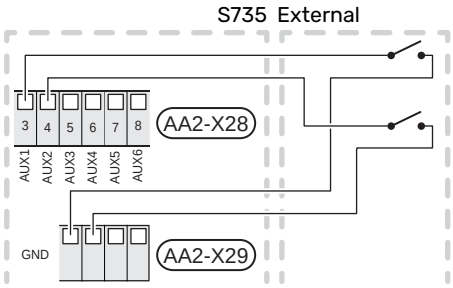

The example above uses the inputs AUX1 (AA2-X28:3) and AUX2 (AA2-X28:4).

Selectable output

A selectable output is AA2-X27.

The output is a potential-free switching relay.

Alarm indication is connected to C-NC, other functions are connected to C-NO.

If S735 is switched off or in emergency mode, the relay is in C-NC position.

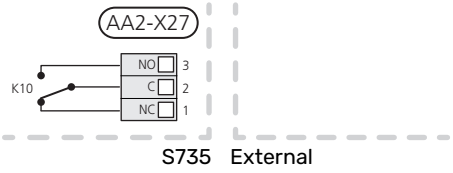

> **NOTE!**
>
> The relay output may be subjected to a max load of 2 A at resistive load (230 V~).

> **TIP!**
>
> The AXC accessory is required if more than one function is to be connected to the AUX output.

Possible selection for AUX inputs

Temperature sensor

Available options are:

- Ext. HW out temp. (BT70) (displayed hot water sensor for HWC. Placed on the supply line.)

  Can be selected when "HW circulation" is activated in menu 7.4 - "Selectable in/outputs".
- Ext. HW recirc. temp. (BT82) (displayed hot water sensor for HWC. Placed on the return line.)

  Can be selected when "HW circulation" is activated in menu 7.4 - "Selectable in/outputs".
- Outd air mixing (BT28) (accessory OEK S20 is required)
- 6 dedicated sensors (BT37.1 – BT37.6) for optional placement and naming.

Monitor

Available options are:

- Level monitor (for condensation water drains (NO).)
- Press. switch climate syst. (NC)
- External alarm (NO), External alarm (NC)
  The alarm is connected to the control, which means that the malfunction is presented as an information message in the display.

External activation of functions

An external switch function can be connected to S735 to activate various functions. The function is activated during the time the switch is closed.

Possible functions that can be activated:

- Temp. more hot water
- Act. dmnd. mode small
- “External adjustment”

  When the switch is closed, the temperature is changed in °C (if a room sensor is connected and activated). If a room sensor is not connected or not activated, the desired change of "Temperature" ("Offset") is set with the number of steps selected. The value is adjustable between -10 and +10. Setting the value for the change is performed in menu 1.30.3 - "External adjustment".
- activation of one of four fan speeds.

  The following options are available:

  - "Activate fan speed 1 (NO)" - "Activate fan speed 4 (NO)"
  - “Activate fan speed 1 (NC)”

  The fan speed is activated during the time the switch is closed. Normal speed is resumed when the switch is opened again.
- SG Ready

> **NOTE!**
>
> "SG Ready" requires two AUX inputs.

In cases where this function is required, it must be connected to terminal block X28 on the base board (AA2).

"SG Ready" is a smart form of tariff control where the electricity supplier can affect the indoor and hot water temperatures or simply block the additional heat and/or the compressor in the heat pump at certain times of the day (can be selected in menu 4.2.3 after the function is activated). Activate the function by connecting potential-free switch functions to two inputs selected in menu 7.4 - "Selectable in/outputs" (SG Ready A and SG Ready B).

Closed or open switch means one of the following:

- *Blocking (A: Closed, B: Open)*

  "SG Ready" is active. The compressor in S735 and additional heat are blocked.

- *Normal mode (A: Open, B: Open)*

  "SG Ready" is not active. No effect on the system.

- *Low price mode (A: Open, B: Closed)*

  "SG Ready" is active. The system focuses on costs savings and can for example exploit a low tariff from the electricity supplier or over-capacity from any own power source (effect on the system can be adjusted in the menu 4.2.3).

- *Overcapacity mode (A: Closed, B: Closed)*

  "SG Ready" is active. The system is permitted to run at full capacity at over capacity (very low price) with the electricity supplier (effect on the system is settable in menu 4.2.3).

(A = SG Ready A. B = SG Ready B)

External blocking of functions

An external switch function can be connected to S735 for blocking various functions. The switch must be potential-free and a closed switch results in blocking.

> **CAUTION!**
>
> Blocking entails a risk of freezing.

Functions that can be blocked:

- Block hot water (any hot water circulation (HWC) remains in operation)
- Block heating
- Block additional heat
- Block compressor
- Tariff blocking (NO), Tariff blocking (NC) (additional heat, compressor, heating and hot water are disconnected)
- "External power limiting"

  In markets where the mains network operator requires dynamic control of the mains network's load, the compressor's and the immersion heater's operating power can be limited.

  You set the power limit in menu 7.4.2 - "External power limiting".

Possible selections for AUX output

Indication

- Alarm outp.
- Holiday
- Away mode
- SPA (Smart Price Adaption: low electricity price)

Control

- HW circulation (circulation pump for hot water circulation)
- Ext. HM pump (external heating medium pump)
- Outd. air damp. (external freeze protection damper (QN42))
- Outd. air damp.. External outdoor air damper (QN38) (accessory OEK S20 is required)

> **CAUTION!**
>
> The relevant distribution box must be marked with a warning about external voltage.

Connecting external circulation pump

An external circulation pump is connected to the AUX output, as illustrated below.

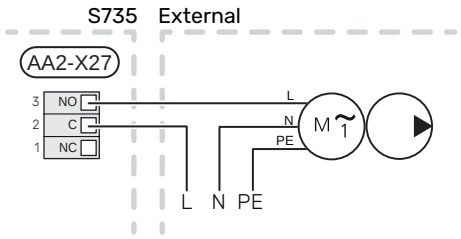

Settings

ELECTRICAL ADDITION - MAXIMUM OUTPUT

The immersion heater is set at the factory to max power.

The immersion heater's power is set in menu 7.1.5.1 - "Int elec add heat".

Power steps of the immersion heater

The table(s) displays the total phase current for the immersion heater.

3x400 V

Max electrical addition (kW)	Max phase current L1(A)	Max phase current L2(A)	Max phase current L3(A)
0	–	–	–
2	–	8.7	–
3	–	7.5	7.5
4	–	8.7	8.7
5	–	15.6	7.5
6	8.7	8.7	8.7
7	–	15.6	15.6
9[1]	8.7	15.6	15.6

[1] Factory setting

3x230 V

Max electrical addition (kW)	Max phase current L1(A)	Max phase current L2(A)	Max phase current L3(A)
0	–	–	–
2	–	8.7	8.7
3	13.0	–	13.0
4	–	17.4	17.4
5	13.0	8.7	19.0
6	8.7	23.0	17.4
7	13.0	17.4	26.5
9[1]	19.0	23.0	26.5

[1] Factory setting

Max operating current

In addition to the immersion heater, there is the current for compressor operation.

The table(s) show what the total phase current for the compressor, control system, fan and circulation pump can amount to, depending on the operating conditions.

S735-4

Max electrical addition (kW)	Max phase current L1(A)
0.0	11

S735-7

Max electrical addition (kW)	Max phase current L1(A)
0.0	14

Current sensor

When the current sensors are connected, S735 monitors the phase currents and allocates the power steps automatically to the least loaded phase.

> **CAUTION!**
>
> If the current sensors are not connected, S735 calculates how high the currents will be if the relevant power steps are added. If the currents are higher than the set fuse size, the power step is not allowed to cut in.

EMERGENCY MODE

Emergency mode is used in event of operational interference and in conjunction with service.

When S735 is put into emergency mode, the system works as follows:

- The compressor is blocked.
- S735 prioritises heating production.
- Hot water is produced if possible.
- The load monitor is not active.
- Max output for the immersion heater in emergency mode, limited according to the setting in menu 7.1.8.2 - "Emergency mode".
- Fixed supply temperature if the system has no value from the outdoor temperature sensor (BT1).

When the emergency mode is active, the status lamp is yellow.

You can activate the emergency mode both when S735 is running and when it is switched off.

To activate when S735 is running: press and hold the on/off button (SF1) for 2 seconds and select "Emergency mode" from the shutdown menu.

To activate emergency mode when S735 is switched off: press and hold the on/off button (SF1) for 5 seconds. (Deactivate the emergency mode by pressing once).

Commissioning and adjusting

Filling and venting

FILLING THE HOT WATER HEATER

1. Open a hot water tap in the property.
2. Open the filling valve (QM10). Afterwards, this valve must be fully open during operation.
3. When the water that comes out of the hot water tap is no longer mixed with air, the water heater is full and the tap can be closed.

FILLING THE CLIMATE SYSTEM

1. Open the vent valves (QM20), (QM22), (QM24) and (QM26).
2. Open the filling valves (QM11), (QM13). The heating unit and the rest of the climate system fill with water.
3. When the water exiting the vent valves (QM20), (QM22), (QM24) and (QM26) is no longer mixed with air, close the valves.
4. After a while, the pressure begins to rise on the pressure gauge (BP5). When the pressure reaches 2.5 bar (0.25 MPa), the safety valve (FL2) starts to release water. Now, close one filling valve (QM11).
5. Reduce the pressure in the climate system to the normal working range (approx. 1 bar) by opening the vent valves (QM20), (QM22), (QM24) and (QM26) or the safety valve (FL2).
6. Start the heat pump and allow it to run in both heating and hot water modes.

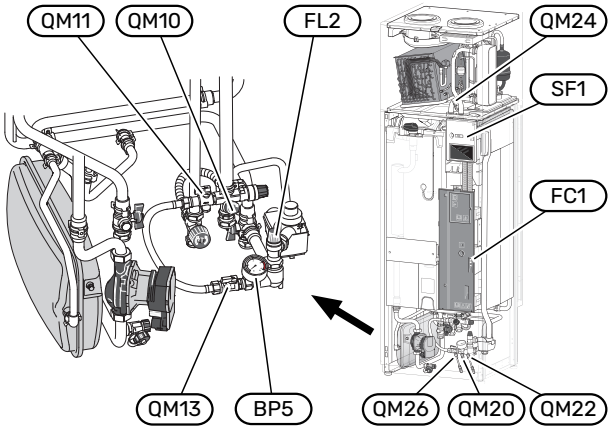

VENTING THE CLIMATE SYSTEM

TIP!
Use the enclosed venting hose for simpler and easier venting.

1. Turn off S735 using the on/off button (SF1).
2. Vent the heat pump via the vent valves (QM20), (QM22), (QM24), (QM26) and the rest of the climate system via its respective vent valves.
3. Keep topping up and venting until all air has been removed and the pressure is correct.

CAUTION!
The vent hoses from the container must be drained of water before air can be released. This means that the system is not necessarily vented despite the flow of water when the vent valves (QM20), (QM22), (QM24), (QM26) are opened.

Start-up and inspection

START GUIDE

> **CAUTION!**
> There must be water in the climate system before S735 is started.

> **CAUTION!**
> Do not start S735 if there is a risk that the water in the system has frozen.

1. Check the miniature circuit-breaker (FC1). It may have tripped during transport.
2. Start S735 by pressing the on/off button (SF1).
3. Follow the instructions in the display's start guide. If the start guide does not start when you start the S735, you can start it manually in menu 7.7.

> **TIP!**
> See the section "Control – Introduction" for a more detailed introduction to the installation's control system (operation, menus, etc.).

If the building is cooled when S735 starts, the compressor may not be able to meet the entire demand without having to use additional heating.

Commissioning

The first time the installation is started a start guide is started. The start guide instructions state what needs to carried out at the first start together with a run through of the installation's basic settings.

The start guide ensures that the start-up is carried out correctly and, for this reason, cannot be skipped.

> **NOTE!**
> The fan is in operation when the start guide is run.

Operation in the start guide

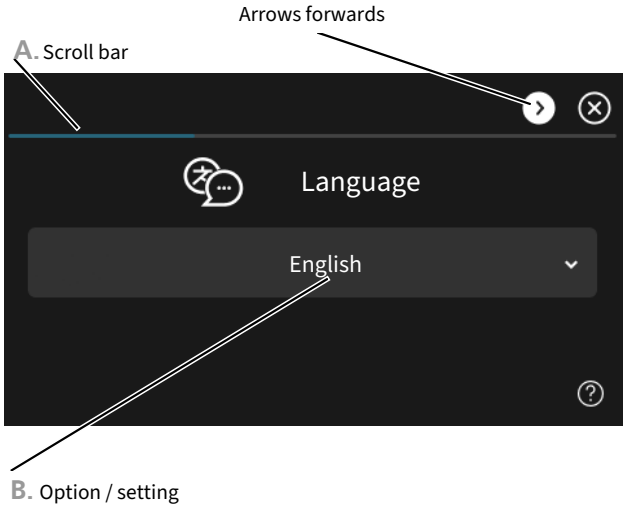

A. Scroll bar

Here you can see how far you have come in the start guide.

Drag to the right or left with your finger to browse between the pages.

You can also press the arrows in the top corners to browse.

B. Option / setting

Make settings for the system here.

SETTING THE VENTILATION

The ventilation must be set according to applicable standards. The fan speed is set in menu 7.1.4.3 - "Fine-tuning the ventilation".

Even if ventilation is roughly set at installation it is important that a ventilation adjustment is ordered and permitted.

> **CAUTION!**
>
> Order a ventilation adjustment to complete the setting.

Ventilation capacity

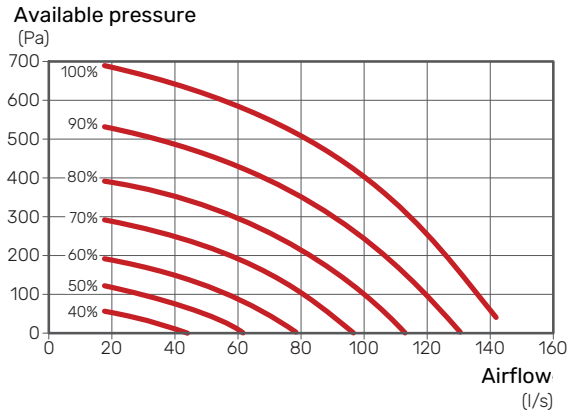

Fan rating

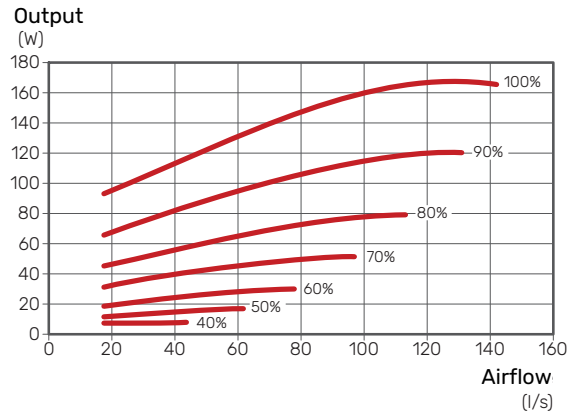

COMMISSIONING WITHOUT FAN

The heat pump can be run without recovery, as only an electric boiler, to produce heat and hot water, for example before the ventilation installation is complete.

1. Enter menu 4.1 - "Operating mode" and select "Add. heat only"
2. Then enter menu 7.1.4.1 - "Fan speed, exhaust air" and reduce the fan speed "Normal" to 0%.

> **CAUTION!**
>
> Select operating mode "Auto" or "Manual" when the heat pump is to run on recovery again.

SETTING PUMP SPEED

The heat pump (GP1) is automatically controlled and sets itself using the controls and based on the heating demand.

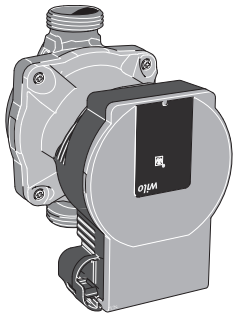

Capacity, heating medium pump

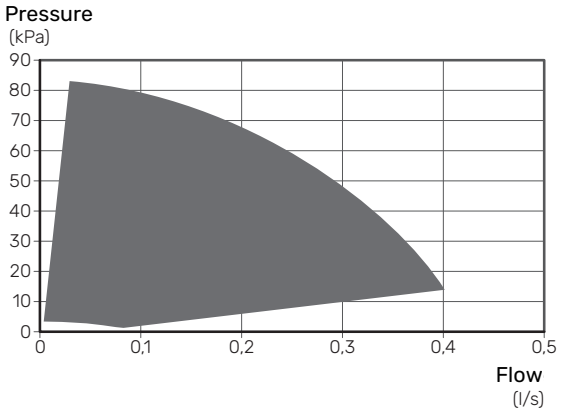

Output, heating medium pump

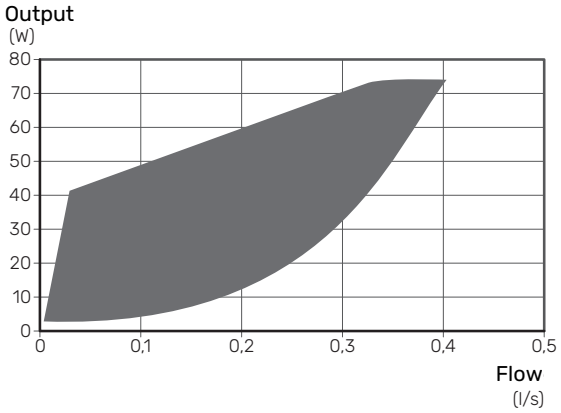

Setting the heating curve

In the menu 1.30.1 -"Curve, heating", you can see the heating curve for the property. The task of the curve is to provide an even indoor temperature, regardless of the outdoor temperature. Based on this curve, the S735 determines the temperature of the water to the climate system (the supply temperature) and thus the indoor temperature.

CURVE COEFFICIENT

The slope of the heating curve indicates how many degrees the supply temperature is to be increased/reduced when the outdoor temperature drops/increases. A steeper slope means a higher supply temperature at a certain outdoor temperature.

The lower the heating curve, the more energy efficient the operation, although an excessively low curve entails reduced comfort.

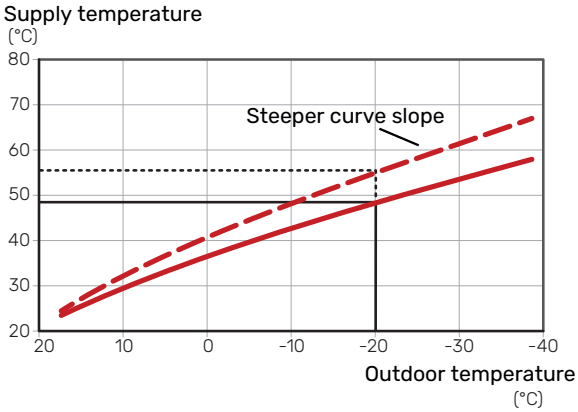

The optimum curve slope depends on the climate conditions in the area and the lowest dimensioned outdoor temperature (DOT), whether the property has radiators, fan coils or under floor heating and how well insulated the property is.

For properties with radiators or fan coils, a higher heating curve (e.g. curve 9) is suitable, for properties with under floor heating, a lower curve (e.g. curve 5) is suitable.

The heating curve is set when the heating installation is installed, but may need adjusting later. Normally, the curve will not need further adjustment.

CURVE OFFSET

An offset of the heating curve means that the supply temperature changes by the same amount for all outdoor temperatures, e.g. a curve offset of +2 steps increases the supply temperature by 5 °C at all outdoor temperatures.

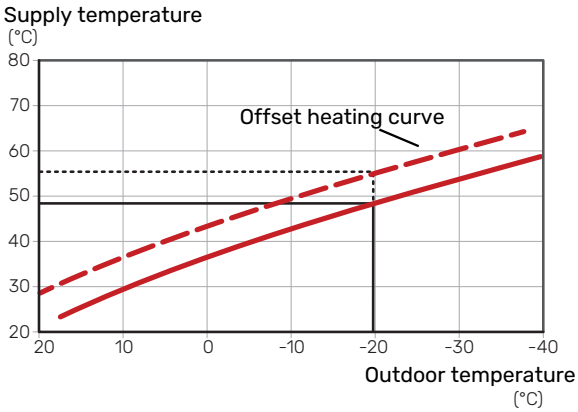

SUPPLY TEMPERATURE – MAXIMUM AND MINIMUM VALUES

Because the flow line temperature cannot be calculated higher than the set maximum value or lower than the set minimum value the heating curve flattens out at these temperatures.

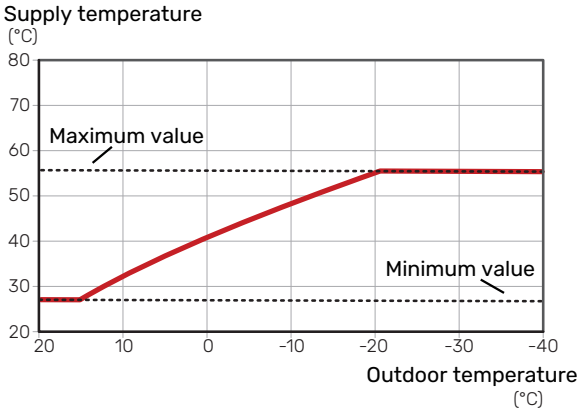

NOTE!

With underfloor heating systems, the maximum supply temperature is normally set between 35 and 45 °C.

ADJUSTMENT OF CURVE

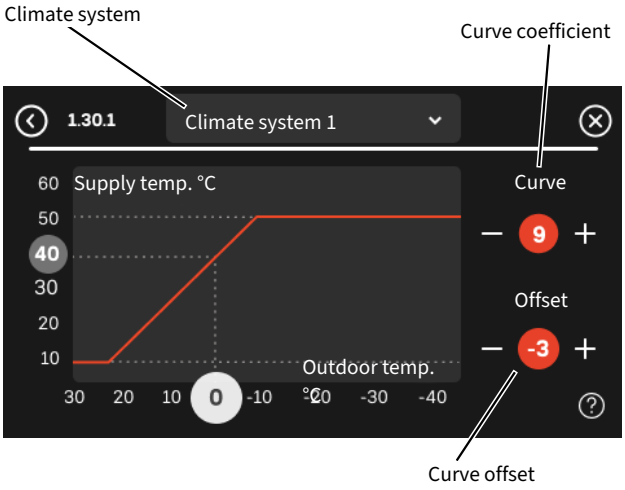

1. Select the climate system (if more than one) for which the curve is to be changed.
2. Select curve slope and curve offset.
3. Select max and min supply temperature.

NOTE!

Curve 0 means that "Own curve" is used.

Settings for "Own curve" are made in menu 1.30.7.

TO READ OFF A HEATING CURVE

1. Drag in the circle on the axis with outdoor temperature.
2. Read off the value for supply temperature in the circle on the other axis.

myUplink

With myUplink you can control the installation – where and when you want. In the event of any malfunction, you receive an alarm directly to your e-mail or a push notification to the myUplink app, which allows you to take prompt action.

The possibility to view the history and to make changes depends on the myUplink subscription. You can always view and subscribe on the myUplink website.

Visit myuplink.com for more information.

Specification

You need the following in order for myUplink to be able to communicate with S735:

- wireless network or network cable
- Internet connection
- account on myuplink.com

We recommend our mobile apps for myUplink.

Connection

When you log in for the first time, you must connect the installation. This can be done with the QR code or with a connection string.

CONNECTION WITH QR CODE

1. Scan the QR code in menu 5.1 - "myUplink".
2. Follow the instructions in the myUplink app.

CONNECTION WITH CONNECTION STRING

1. Select connection type (wifi/Ethernet) in menu 5.2.1 or 5.2.2.
2. In menu 5.1 you select "Request new connection string".
3. When a connection string has been produced, it is shown in this menu and is valid for 60 minutes.
4. If you do not already have an account, register in the mobile app or on myuplink.com/sign-up.
5. Use the connection string to connect the system to your user account on myUplink.

Range of services

myUplink gives you access to various levels of service. The basic level is included and, in addition to that, you can opt for additional subscriptions for a fee. Visit https://myuplink.com/store for more information.

myUplink PRO

myUplink PRO is a complete tool for offering service agreements to the end customer and for always having the latest information about the installation, as well as the option to adjust settings remotely.

With myUplink PRO, you can provide your connected customers with rapid status and remote diagnostics.

Visit pro.myuplink.com for information about what else you can do using the mobile app and online.

Control - Introduction

Display unit

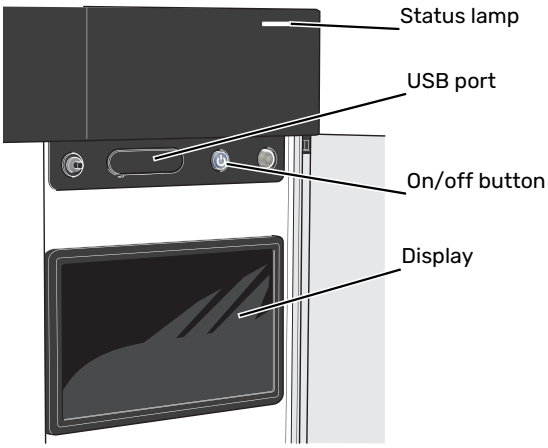

THE STATUS LAMP

The status lamp indicates current operating status. It:

- lights up white during normal operation.
- lights yellow in emergency mode.
- lights red in the event of a deployed alarm.
- flashes white during active notice.
- is blue when S735 is switched off.

If the status lamp is red, you receive information and suggestions for suitable actions on the display.

> TIP!
>
> You also receive this information via myUplink.

THE USB PORT

Above the display, there is a USB port that can be used e.g. for updating the software. Log in to myuplink.com and click the "General" tab and then "Software" to download the latest software version for your installation.

> TIP!
>
> If you connect the product to myUplink, you can update the software without using the USB port. See section "myUplink".

THE ON/OFF BUTTON

The on/off button (SF1) has three functions:

- start
- switch off
- activate emergency mode

To start: press the on/off button once.

To switch off, restart or activate emergency mode: press and hold the on/off button for 2 seconds. This brings up a menu with various options.

For hard switch off: press and hold the on/off button for 10 seconds.

To activate emergency mode when S735 is switched off: press and hold the on/off button (SF1) for 5 seconds. (Deactivate the emergency mode by pressing once).

THE DISPLAY

Instructions, settings and operational information are shown on the display.

Navigation

S735 has a touchscreen where you simply navigate by pressing and dragging with your finger.

SELECT

Most options and functions are activated by lightly pressing on the display with your finger.



BROWSE

The symbols at the bottom edge show if there are more pages.

Drag to the right or left with your finger to browse between the pages.

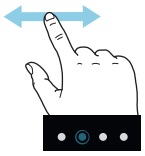

SCROLL

If the menu has several sub-menus, you can see more information by dragging up or down with your finger.

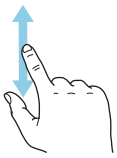

CHANGE A SETTING

Press the setting you want to change.

If it is an on/off setting, it changes as soon as you press it.

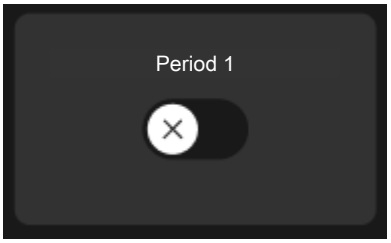

If there are several possible values, a spinning-wheel appears that you drag up or down to find the desired value.

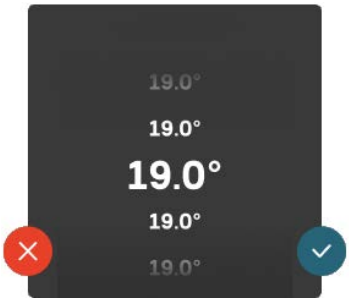

Press ✓ to save your change, or ✗ if you don't want to make a change.

FACTORY SETTING

Factory set values are marked with *.

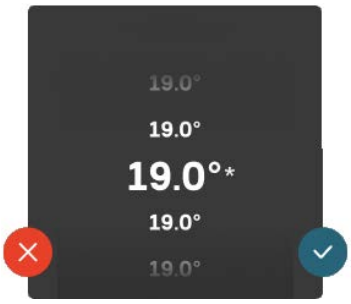

HELP MENU



In many menus there is a symbol that indicates that extra help is available.

Press the symbol to open the help text.

You may need to drag with your finger to see all text.

Menu types

HOME SCREENS

Smartguide

Smartguide helps you both to view information about the current status and to make the most common settings easily. The information that you see depends on the product you have and the accessories that are connected to the product.

Select an option and press it to proceed. The instructions on the screen help you to choose correctly or give you information about what is happening.

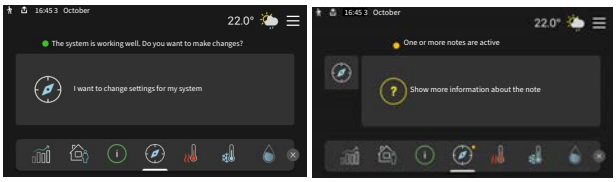

Function pages

On the function pages, you can both view information about the current status and easily make the most common settings. The function pages that you see depend on the product you have and the accessories that are connected to the product.

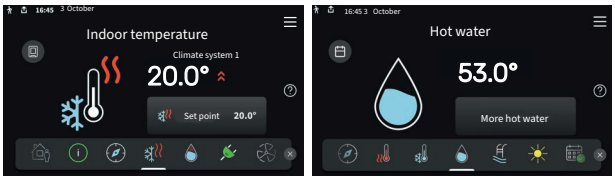



Drag to the right or left with your finger to browse between the function pages.

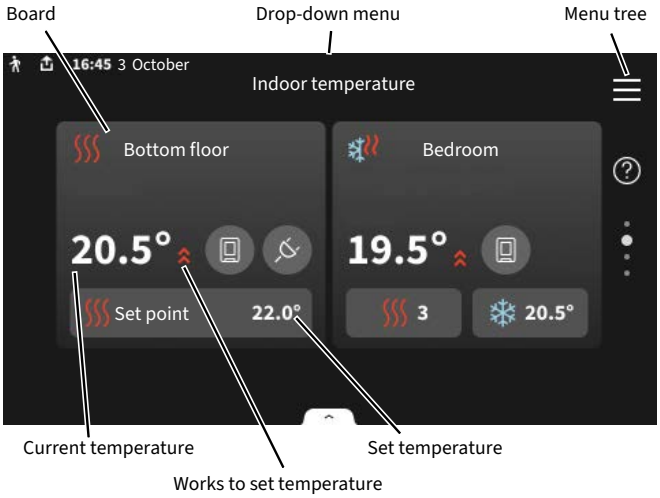

Press the card to adjust the desired value. On certain function pages, drag your finger up or down to obtain more cards.

Product overview

It can be a good idea to have the product overview open during any service cases. You can find it among the function pages.

Here, you can find information about the product name, the product's serial number, the version of the software and contact details for the company that is supplying service. When a software update is available, you can start the update here (provided that S735 is connected to myUplink).

> **TIP!**
>
> You enter the service details in menu 4.11.1.

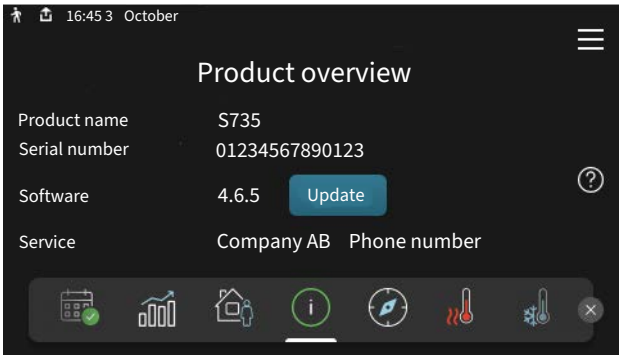

Drop-down menu

From the home screens, you reach a new window containing further information by dragging down a drop-down menu.

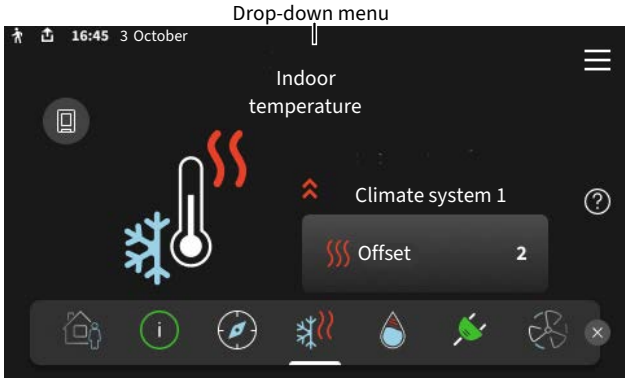

The drop-down menu shows the current status for S735, what is in operation and what S735 is doing at the moment. The functions that are in operation are highlighted with a frame.

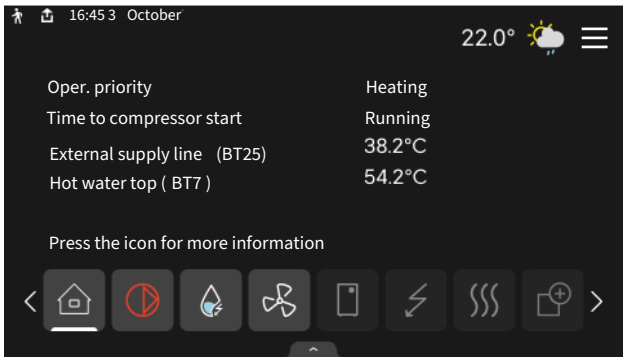

Press the icons on the menu's lower edge for more information about each function. Use the scroll bar to view all information for the selected function.

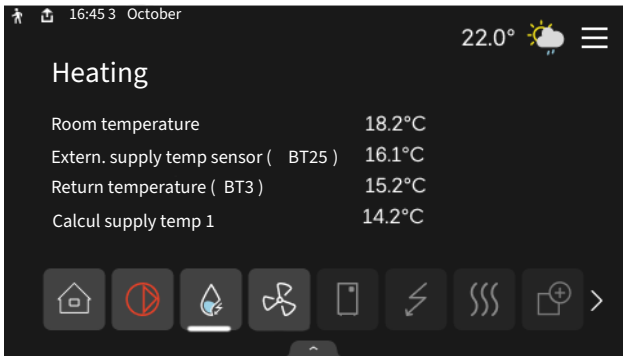

MENU TREE

In the menu tree, you can find all menus and can make more advanced settings.

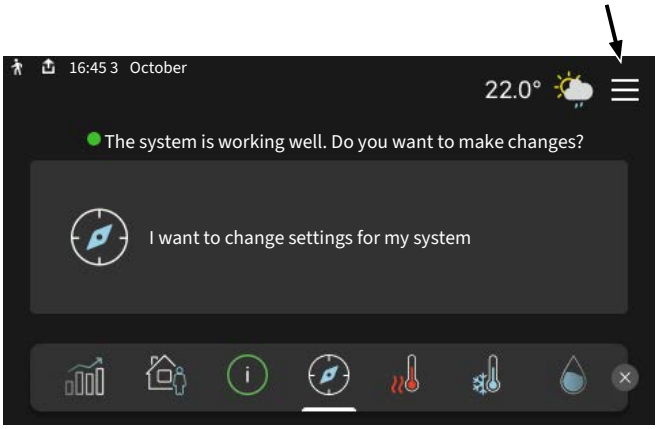

You can always press "X" to return to the home screens.

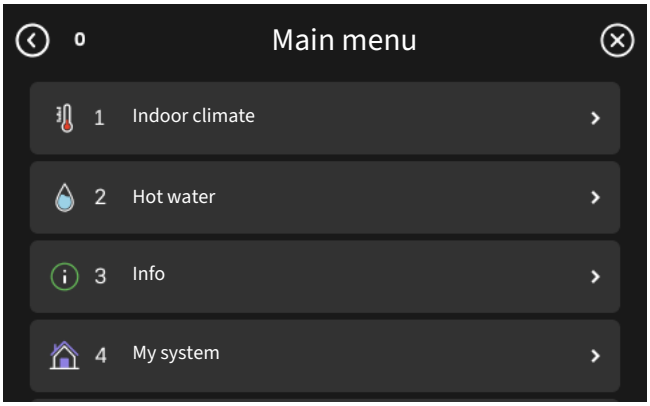

Climate systems and zones

Climate systems can be divided into multiple zones. A zone can be a specific room, and it is also possible to divide a large room into several zones, with the help of radiator thermostats.

Each zone can contain one or more accessories, e.g. room sensors or thermostats, both wired and wireless.

A zone can be set with or without the influence of the climate system's supply temperature.

OUTLINE DIAGRAM WITH TWO CLIMATE SYSTEMS AND FOUR ZONES

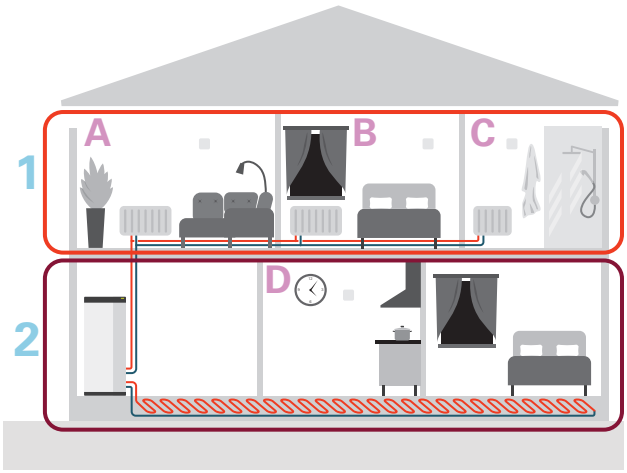

This example shows a property with two climate systems (1 and 2, two separate floors) divided into four zones (A-D, four different rooms). The temperature can be controlled individually in each zone (accessory required).

Update the software

There are several ways to update the software for S735. It is possible to do this via:

- myUplink and myUplink PRO
- home screen
- menu 5.10 - "Direct connection" with the myUplink PRO account
- The USB port

Control - Menus

Menu 1 - Indoor climate

OVERVIEW

1.1 - Temperature	1.1.1 - Indoor temperature
	1.1.3 - Humidity [1]
1.2 - Ventilation	1.2.1 - Fan speed
	1.2.2 - Night cooling
	1.2.4 - Demand controlled ventilation [1]
	1.2.5 - Fan return time
	1.2.6 - Filter replacement interval
1.3 - Room sensor settings	1.3.3 - Room sensor settings
	1.3.4 - Zones
	1.3.30 - Unassigned units
1.4 - External influence	
1.5 - Climate system name	
1.30 - Advanced	1.30.1 - Curve, heating
	1.30.3 - External adjustment
	1.30.4 - Lowest supply heating
	1.30.6 - Highest supply heat
	1.30.7 - Own curve
	1.30.8 - Point offset

1 Consult the accessory's Installer Manual.

MENU 1.1 - TEMPERATURE

Here, you make temperature settings for your installation's climate system.

If there is more than one zone and/or climate system, the settings are made for each zone/system.

MENU 1.1.1 - INDOOR TEMPERATURE

Set the temperature (with room sensor installed and activated):

Setting range: 5 – 35°C

The value in the display appears as a temperature in °C, if the zone is controlled by a room sensor.

NOTE!

A slow climate system, such as underfloor heating, may be unsuitable for controlling with room sensors.

Setting the temperature (without room sensors activated):

Setting range: -10 – 10

The display shows the set value for heating (curve offset). To increase or reduce the indoor temperature, increase or reduce the value in the display.

The number of steps the value has to be changed in order to achieve a one degree change to the indoor temperature depends on the property's climate system. One step is usually enough, but in some cases several steps may be required.

If multiple zones in a climate system do not have activated room sensors, these will have the same curve offset.

Set the desired value. The new value is shown on the right-hand side of the symbol on the home screen, indoor temperature.

NOTE!

An increase in the room temperature can be slowed by the thermostats for the radiators or under floor heating. Therefore, open the thermostats fully, except in those rooms where a cooler temperature is required, e.g. bedrooms.

If the exhaust air temperature falls below 10 °C, the compressor is blocked and electric additional heat is permitted. No energy is recovered from the exhaust air, when the compressor is blocked.

TIP!

If the room temperature is constantly too low/high, you increase/decrease the value on the indoor temperature home screen.

If the room temperature changes when the outdoor temperature changes, you increase/decrease the curve slope by one step in menu 1.30.1.

Wait 24 hours before making a new setting, so that the room temperature has time to stabilise.

MENU 1.2 - VENTILATION

You make the settings for the ventilation in the installation here. For example, you can adjust the fan speed and set how frequently S735 will remind you of when air filters need replacing.

MENU 1.2.1 - FAN SPEED

Alternatives: normal and speed 1 – speed 4

Here, you can temporarily increase or reduce the ventilation in the property.

When you have selected a new speed a clock starts a count down. When the time has counted down the ventilation speed returns to the normal setting.

If necessary, the different return times can be changed in menu 1.2.5.

The fan speed is shown in brackets (in percent) after each speed alternative.

TIP!

If longer time changes are required, use the holiday function, home/away mode or scheduling.

MENU 1.2.2 - NIGHT COOLING

Night cooling
Alternative: on/off

Start temp exhaust air
Setting range: 20 – 30 °C

Min. diff. ind. temp. - outd. temp.
Setting range: 3 – 10 °C

Night cooling during heating
Alternative: on/off

Here, you can activate night cooling. When the temperature in the property is high, and the outdoor temperature is lower, a cooling effect can be obtained by forcing the ventilation. When night cooling is activated, the fan runs at the speed 4.

Start temp exhaust air: Here, you set the exhaust air temperature at which night cooling will start.

Min. diff. ind. temp. - outd. temp.: If the temperature difference is greater than the set value for "Min. diff. ind. temp. - outd. temp.", and the exhaust air temperature is higher than the set value for "Start temp exhaust air", the ventilation operates at speed 4 until one of these conditions is no longer valid.

Night cooling during heating: It is possible to have night cooling during the time heating is permitted.

MENU 1.2.5 - FAN RETURN TIME

speed 1 – speed 4
Setting range: 1 – 24 h

Here, you select the return time for the temporary change of ventilation speed (speed 1 – speed 4), regardless of whether the speed has been changed in menu 1.2.1 - "Fan speed", via the home screen or via myUplink.

Return time is the time it takes before the temporary ventilation speed returns to normal speed.

MENU 1.2.6 - FILTER REPLACEMENT INTERVAL

Months btwn filter repl.
Setting range: 1 – 24 months

The filter in S735 is of a type that should not be cleaned, but has to be replaced instead. Replacement must be performed regularly, at least once a year. More frequent intervals may be necessary, depending on the quantity of particles in the air as well as other environmental factors. Test to find out what is most appropriate for the installation.

Set the interval for the reminder in this menu.

The menu shows the time remaining until the next reminder, and you can also reset active reminders.

MENU 1.3 - ROOM SENSOR SETTINGS

Here you configure settings for room sensors and zones. The room sensors are grouped by zone.

MENU 1.3.3 - ROOM SENSOR SETTINGS

Here you select which zone a sensor should belong to. It is possible to connect several room sensors to each zone. If multiple room sensors are used in the same zone, their average temperature is calculated and used as the controlling temperature. Each room sensor can be given a unique name.

The control of heating, humidity and ventilation are activated by checking each option. Which options are shown depends on which type of sensor is installed. If control is not activated, the sensor will be the displaying sensor.

Smart Room Comfort is activated when heating is selected as the controlling option. A zone is regulated based on the weather forecast and the indoor temperature.

NOTE!

A slow heating system such as underfloor heating may be inappropriate for controlling with room sensors.

If there is more than one zone and/or climate system, the settings are made for each zone/system.

MENU 1.3.4 - ZONES

Here, you add and name zones. You also select the climate system to which a zone is to belong.

MENU 1.3.30 - UNASSIGNED UNITS

All units that are not connected to a zone are listed here.

MENU 1.4 - EXTERNAL INFLUENCE

Information for the accessories/functions that can affect the indoor climate and that are active is shown here.

MENU 1.5 - CLIMATE SYSTEM NAME

You can give the installation's climate system a name here.

MENU 1.30 - ADVANCED

Menu "*Advanced*" is intended for the advanced user. This menu has several sub-menus.

"*Curve, heating*" Setting the heating curve slope.

"*External adjustment*" Setting the heating curve offset when the external contact is connected.

"*Lowest supply heating*" Setting minimum permitted supply temperature during heating operation.

"*Highest supply heat*" Setting maximum permitted supply temperature for the climate system.

"*Own curve*" Here, you can create your own heating curve, if there are special requirements, by setting the desired supply temperatures for different outdoor temperatures.

"*Point offset*" Select a change in the heating curve at a certain outdoor temperature here. One step is usually enough to change the room temperature by one degree, but in some cases several steps may be required.

MENU 1.30.1 - CURVE, HEATING

Curve, heating
Setting range: 0 – 15

The heating curve can be found in this menu. The task of the heating curve is to provide a uniform indoor temperature, regardless of the outdoor temperature. It is from the heating curve that S735 determines the temperature of the water to the climate system, the supply temperature, and therefore the indoor temperature.

For properties with radiators or fan coils, a higher heating curve (e.g. curve 9) is suitable, for properties with under floor heating, a lower curve (e.g. curve 5) is suitable.

When you have selected the heating curve, you can read off how the supply temperature will change at different outdoor temperatures.

TIP!

It is also possible to create your own curve. This is done in menu 1.30.7.

NOTE!

With underfloor heating systems, the maximum supply temperature is normally set between 35 and 45 °C.

TIP!

If the room temperature is constantly too low/high, you increase/decrease the curve offset by one step.

If the room temperature changes when the outdoor temperature changes, you increase/decrease the curve slope by one step.

Wait 24 hours before making a new setting, so that the room temperature has time to stabilise.

MENU 1.30.3 - EXTERNAL ADJUSTMENT

External adjustment
Setting range: -10 – 10

Setting range (if room sensor is installed): 5 – 30 °C

Connecting an external switch, for example a room thermostat or a timer, allows you to raise or lower the room temperature temporarily or periodically. When the switch is on, the heating curve offset is changed by the number of steps selected in the menu. If a room sensor is installed and activated, the desired room temperature (°C) is set.

If there is more than one zone, the setting can be made separately for each zone.

MENU 1.30.4 - LOWEST SUPPLY HEATING

Climate system
Setting range: 20 – 80 °C

Here, you set the lowest supply temperature for the climate system. This means that S735 never calculates a temperature lower than that set here.

If there is more than one climate system the setting can be made separately for each system.

MENU 1.30.6 - HIGHEST SUPPLY HEAT

Climate system
Setting range: 20 – 80 °C

Here, you set the highest supply temperature for the climate system. This means that S735 never calculates a temperature higher than the one set here.

If there is more than one climate system the setting can be made separately for each system. Climate systems 2 – 8 cannot be set to a higher max supply temperature than climate system 1.

NOTE!

With underfloor heating systems, "Maximum supply temperature for heating" should normally be set between 35 and 45°C.

MENU 1.30.7 - OWN CURVE

Own curve, heat

Supply temp
Setting range: 5 – 80 °C

NOTE!

Curve 0 must be selected for own curve to apply.

Here, you can create your own heating curve, if there are special requirements, by setting the desired supply temperatures for different outdoor temperatures.

MENU 1.30.8 - POINT OFFSET

Outdoor temp. point
Setting range: -40 – 30 °C

Change in curve
Setting range: -10 – 10 °C

Select a change in the heating curve at a certain outdoor temperature here. One step is usually enough to change the room temperature by one degree, but in some cases several steps may be required.

The heating curve is affected at ± 5°C from set outdoor temp. point.

It is important that the correct heating curve is selected so that the room temperature is experienced as even.

TIP!

If it feels cold in the property at e.g. -2 °C, "outdoor temp. point" is set to "-2" and "change in curve" is increased until the desired room temperature is maintained.

NOTE!

Wait 24 hours before making a new setting, so that the room temperature has time to stabilise.

Menu 2 - Hot water

OVERVIEW

2.1 - More hot water
2.2 - Hot water demand
2.3 - External influence
2.4 - Periodic increase
2.5 - Hot water circulation

MENU 2.1 - MORE HOT WATER

More hot water
Alternatives: 3, 6, 12, 24 and 48 hours, and modes "Off" and "One-time incr."

Quick start with imm. heater
Alternative: on/off

"More hot water": When there is a temporary increase in hot water demand, this menu can be used to select an increase in the hot water temperature for a selectable time.

If the hot water temperature is already sufficiently high, "One-time incr." cannot be activated.

The function is activated directly when a time period is selected. The remaining time for the selected setting is shown to the right.

When the time has run out, S735 returns to the set demand mode.

Select "Off" to switch off "More hot water".

"Quick start with imm. heater": Gives faster heating, but can lead to increased energy consumption.

MENU 2.2 - HOT WATER DEMAND

Alternative: Small, Medium, Large

The difference between the selectable modes is the temperature of the hot tap water. Higher temperature means that the hot water lasts longer.

"Small": This mode produces less hot water at a lower temperature than the other alternatives. This mode can be used in smaller households with a small hot water demand.

"Medium": Normal mode produces a larger amount of hot water and is suitable for most households.

"Large": This mode produces the greatest quantity of hot water at a higher temperature than the other alternatives. In this mode, the immersion heater may be used to partially heat the hot water. In this mode, hot water production is prioritised ahead of heating.

MENU2.3 - EXTERNAL INFLUENCE

Information for the accessories/functions that can affect the hot water operation is shown here.

MENU 2.4 - PERIODIC INCREASE

Activated
Alternative: on/off

Period
Setting range: 1 - 90 days

Start time
Setting range: 00:00 - 23:59

Next increase
The date when the next periodic increase will occur is shown here.

To prevent bacterial growth in the water heater, the heat pump and the immersion heater can increase the hot water temperature once at regular intervals.

Here, you can select the length of time between increases in the hot water temperature. The time can be set between 1 and 90 days. Tick/untick "Activated" to start/switch off the function.

MENU 2.5 - HOT WATER CIRCULATION

Operating time
Setting range: 1 – 60 min

Downtime
Setting range: 0 – 60 min

Period

Active days
Alternatives: Monday – Sunday

Start time
Setting range: 00:00 – 23:59

Stop time
Setting range: 00:00 – 23:59

Set hot water circulation for up to five periods per day here. During the set periods, the hot water circulation pump will run according to the settings above.

"Operating time" determines how long the hot water circulation pump will run per operating instance.

"Downtime" determines how long the hot water circulation pump will be stationary between operating instances.

"Period": Here, you set the time period during which the hot water circulation pump will run, by selecting "Active days", "Start time" and "Stop time".

> **CAUTION!**
>
> Hot water circulation is activated in menu 7.4 "Selectable in/outputs" or via accessory.

Menu 3 - Info

OVERVIEW

3.1 - Operating info	
3.2 - Temperature log	
3.3 - Energy and power log	3.3.1 - Energy log
	3.3.2 - Power log
3.4 - Alarm log	
3.5 - Product info, summary	
3.6 - Licences	
3.7 - Version history	
3.8 - Data protection information	

MENU 3.1 - OPERATING INFO

Information about the installation's current operating status (e.g. current temperatures) can be obtained here. No changes can be made.

You can also read off operating information from all connected wireless units.

A QR code appears on one side. This QR code indicates serial number, product name and limited operating data.

MENU 3.2 - TEMPERATURE LOG

Here you can see the average temperature indoors week by week over the past year.

The average outdoor temperature is only shown if a room temperature sensor/room unit is installed. Otherwise, the exhaust air temperature is shown.

MENU 3.3 - ENERGY LOG

Here, you can select which parts of the installation will be included in the log.

MENU 3.3.1 - ENERGY LOG

Number of years
Setting range: 1 – 10 years

Months
Setting range: January - December

Include hot water
Alternative: on/off

Show outdoor temperature
Alternative: on/off

Show indoor temperature
Alternative: on/off

Here, you can see a diagram showing how much energy S735 supplies and consumes. You can select which parts of the installation will be included in the log. It is also possible to activate display of indoor and/or outdoor temperature.

MENU 3.3.2 - POWER LOG

Here, you can see how much power the system has consumed at a given time of day. You can choose to view either hourly or every 15 minutes.

MENU 3.4 - ALARM LOG

To facilitate troubleshooting, the installation's operating status at the time of an alarm is stored here. You can see information for the 10 most recent alarms.

To view operating status in the event of an alarm, select the relevant alarm from the list.

MENU 3.5 - PRODUCT INFO, SUMMARY

Here, you can view general information about the installation, for example software version.

MENU 3.6 - LICENCES

You can view licences for open source code here.

MENU 3.7 - VERSION HISTORY

Here you can see what is new and/or has been changed in different software versions.

MENU 3.8 - DATA PROTECTION INFORMATION

Here, you can see what data NIBE collects for troubleshooting and optimising the product.

Menu 4 - My system

OVERVIEW

4.1 - Operating mode		
4.2 - Plus functions	4.2.2 - Solar electricity[1]	
	4.2.3 - SG Ready	
	4.2.5 - Smart Price Adaption™	4.2.5.1 - Electricity prices
		4.2.5.2 - Transfer fees
4.3 - Profiles[1]		
4.4 - Weather control		
4.5 - Away mode		
4.6 - Smart Energy Source™		
4.7 - Energy price	4.7.1 - Variable electricity price	
	4.7.3 - Shunt-controlled additional heat[1]	
	4.7.4 - Step-controlled additional heat[1]	
4.8 - Time and date		
4.9 - Language		
4.10 - Country		
4.11 - Tools	4.11.1 - Installer details	
	4.11.2 - Sound when pressing button	
	4.11.4 - Home screen	
4.30 - Advanced	4.30.4 - Fact. settings user	

[1] Consult the accessory's Installer Manual.

MENU 4.1 - OPERATING MODE

Operating mode
Alternative: Auto, Manual, Add. heat only

Manual
Alternative: Compressor, Add. heat, Heating

Add. heat only
Alternative: Heating

The operating mode for S735 is normally set to "Auto". It is also possible to select operating mode "Add. heat only". Select "Manual" to choose that functions will be activated.

If "Manual" or "Add. heat only" is selected, selectable options are shown further down. Tick the functions you want to activate.

Operating mode "Auto"

In this operating mode, S735 automatically selects which functions are permitted.

Operating mode "Manual"

In this operating mode you can select what functions are permitted.

"Compressor" is the unit that produces hot water and heating for the property. You cannot deselect "compressor" in manual mode.

"Add. heat" is the unit that helps the compressor to heat the property and/or the hot water when it cannot manage the entire demand alone.

"Heating" ensures you obtain heating in the property. You can deselect the function, when you do not wish to have the heating on.

NOTE!

If you deselect "Add. heat", it may result in insufficient hot water and/or heating in the property.

Operating mode "Add. heat only"

In this operating mode the compressor is not active, only additional heat is used.

NOTE!

If you select the mode "Add. heat only", the compressor is deselected and there is a higher operating cost.

MENU 4.2 - PLUS FUNCTIONS

Settings for any additional functions installed in S735 can be made in the sub menus.

MENU 4.2.3 - SG READY

Here, you set the part of the climate system (e.g. room temperature) that will be affected on activation of "SG Ready". The function can only be used in mains networks that support the "SG Ready" standard.

Affect room temp heating

With low price mode on "SG Ready", the parallel offset for the indoor temperature is increased by "+1". If a room sensor is installed and activated, the desired room temperature is increased instead by 1 °C.

With overcapacity mode on "SG Ready", the parallel offset for the indoor temperature is increased by "+2". If a room sensor is installed and activated, the desired room temperature is increased by 2 °C instead.

Affect hot water

With low price mode on "SG Ready", the stop temperature for the hot water is set as high as possible with compressor operation only (immersion heater not permitted).

In the case of overcapacity mode on "SG Ready", the hot water is set to large demand mode (immersion heater permitted).

> **CAUTION!**
>
> The function must be connected to two AUX inputs and be activated in menu 7.4 "Selectable in/outputs".

MENU 4.2.5 - SMART PRICE ADAPTION™

Activated
Alternative: on/off

Price source
Options: "Spot price", "Manual"

Affect heating
Options: "Off", "Comfort", "Saving", "Saving PLUS"

Affect hot water
Alternative: on/off

This function can only be used if you have an active account on myUplink and the electricity supplier supports electricity contracts that are based on the current spot price.

Smart Price Adaption™ adjusts some of the installation's consumption throughout the day to those periods that have the cheapest electricity prices, which can provide savings if you are on a spot price electricity contract. The function is based on downloading the electricity prices for the coming 24 hours via myUplink.

"Price source": Here, you can choose whether to use spot prices or to enter prices manually.

"Degree of effect": The greater the saving your select, the greater the effect the electricity price has.

Certain wireless units can also be affected by Smart Price Adaption™.

> **CAUTION!**
>
> Increased savings can lead to a negative impact on the comfort.

MENU 4.2.5.1 - ELECTRICITY PRICES

If you have selected "Manual" in menu 4.2.5 - "Smart Price Adaption™", you can enter the electricity price for individual time periods.

MENU 4.2.5.2 - TRANSFER FEES

If you have selected "Spot price" in menu 4.2.5 - "Smart Price Adaption™", you can define transfer fees and assign them to specific time periods. The changes take effect the following day.

MENU 4.4 - WEATHER CONTROL

Activate weath. contr.
Alternative: on/off

Factor
Setting range: 0 – 10

You can select whether you want S735 to adjust the indoor temperature based on the weather forecast.

You can set factor for outdoor temperature. The higher the value, the greater the effect from the weather forecast.

> **NOTE!**
>
> This menu is only visible if the installation is connected to myUplink and if a climate system is not using room control.

MENU 4.5 - AWAY MODE

In this menu, you activate/deactivate "Away mode".

When away mode is activated, the following functions are affected:

- the setting for heating is lowered slightly
- the hot water temperature is lowered if demand mode "large" or "medium" is selected
- The AUX function "Away mode" is activated

If you want, you can select for the following functions to be affected:

- ventilation
- hot water circulation (accessory or use of AUX is required)

MENU 4.6 -SMART ENERGY SOURCE™

> **CAUTION!**
>
> Smart Energy Source™ requires external additional heat.

Smart Energy Source™
Alternative: on/off

Control method
Setting options: Price per kWh / CO2

If Smart Energy Source™ is activated, S735 prioritises how/to what extent each docked energy source will be used. Here, you can select whether the system will use the energy source that is cheapest at the time or the one that is currently the most carbon dioxide neutral.

NOTE!

The selections in this menu affect menu 4.7 - "Energy price".

MENU 4.7 - ENERGY PRICE

Here you can use tariff control for the additional heat.

Here, you can choose whether the system is to exercise control based on the spot price, tariff control or a set price. The setting is made for each individual energy source. Spot price can only be used if you have a spot price-based agreement with your electricity supplier.

Set the lower tariff periods. It is possible to set two different date periods per year. Within these periods, it is possible to set up to four different periods on weekdays (Monday to Friday) or four different periods on weekends (Saturdays and Sundays).

NOTE!

This menu can only be seen if Smart Energy Source™ is activated.

MENU 4.7.1 - VARIABLE ELECTRICITY PRICE

Here you can use tariff control for the electric additional heat.

Set the lower tariff periods. It is possible to set two different date periods per year. Within these periods, it is possible to set up to four different periods on weekdays (Monday to Friday) or four different periods on weekends (Saturdays and Sundays).

MENU 4.8 - TIME AND DATE

Set time and date, display mode and time zone here.

TIP!

Time and date are set automatically if connected to myUplink. To obtain the correct time, the time zone must be set.

MENU 4.9 - LANGUAGE

Choose the language that you want the information to be displayed in here.

MENU 4.10 - COUNTRY

Here, you specify the country in which the product has been installed. This allows access to country-specific settings in the product.

Language settings can be made regardless of this selection.

CAUTION!

This function is locked after 24 hours. If the display is restarted, or if the software is updated, the country selection will be locked in connection with this. Afterwards, it is not possible to change the country selected in this menu without first replacing components in the product.

MENU 4.11 - TOOLS

Here, you can find tools for use.

MENU 4.11.1 - INSTALLER DETAILS

The installer's name and telephone number are entered in this menu.

Afterwards, the details are visible in the home screen, "Product overview".

MENU 4.11.2 - SOUND WHEN PRESSING BUTTON

Alternative: on/off

Here you choose if you want to hear a sound when you press buttons on the display.

MENU 4.11.4 - HOME SCREEN

Alternative: on/off

Here, you choose which home screens you want to be displayed.

The number of options in this menu varies depending on which products and accessories are installed.

MENU 4.30 - ADVANCED

Menu "Advanced" is intended for advanced users.

MENU 4.30.4 - FACT. SETTINGS USER

All settings that are available to the user (including advanced menus) can be reset to default values here.

NOTE!

After the factory setting, personal settings such as the heating curve must be reset.

Menu 5 - Connection

OVERVIEW

5.1 - myUplink	
5.2 - Network settings	5.2.1 - wifi
	5.2.2 - Ethernet
	5.2.3 – Network usage
5.4 - Wireless units	
5.10 - Tools	5.10.1 - Direct connection

MENU 5.1 – MYUPLINK

Here, you obtain information about the installation's connection status, serial number and how many users and service partners are connected to the installation. A connected user has a user account in myUplink, which has been given permission to control and/or monitor the installation.

You can also manage the installation's connection to myUplink and request a new connection string.

It is possible to switch off all users and service partners who are connected to the installation via myUplink.

> **CAUTION!**
>
> After disconnecting all users, none of them can monitor or control the installation via myUplink without requesting a new connection string.

MENU 5.2 – NETWORK SETTINGS

Here, you choose whether the system connects to the internet via wifi (menu 5.2.1) or via a network cable (Ethernet) (menu 5.2.2).

Here, you can set TCP/IP settings for the installation.

To set the TCP/IP settings with the aid of DHCP, activate "Automatic".

During manual setting, select "IP address" and enter the correct address using the keyboard. Repeat this procedure for "Network mask", "Gateway" and "DNS".

> **NOTE!**
>
> The installation cannot connect to the internet without the correct TCP/IP settings. If you are unsure about applicable settings, use the "Automatic" mode or contact the network administrator (or equivalent) for further information.

> **TIP!**
>
> All settings made since opening the menu can be reset by selecting "Reset".

MENU 5.2.3 – NETWORK USAGE

Primary internet connection
Alternative: Wifi / Ethernet

Local control network
Alternative: Wifi / Ethernet / Wifi + Ethernet

Here you can configure how the control system uses the available network types for internet connection and local control.

"Primary internet connection": Here you select which network type is to be used for the internet connection. If the selected network type is not available, the control system can continue to use another available network type.

"Local control network": Here you select which network type is to be used for local control of the control system, e.g. MODBUS/TCP, REST API or EEBUS.

MENU 5.4 – WIRELESS UNITS

In this menu you connect wireless devices, and manage settings for connected devices.

Add the wireless device by pressing "Add unit". For the fastest identification of the wireless device, it is recommended that the main unit is first set to search mode. Then set the wireless device to identification mode.

MENU 5.10 – TOOLS

As the installer, you cane.g. connect an installation via an app here, by activating an access point for direct connection to a mobile phone.

MENU 5.10.1 – DIRECT CONNECTION

If you have a user account in myUplink PRO, you can activate direct connection via wifi. This means that the installation will lose communication with the relevant network, and that you instead make settings via your mobile unit, which you connect to the installation.

Menu 6 - Scheduling

OVERVIEW

6.1 - Holiday
6.2 - Scheduling

MENU 6.1 - HOLIDAY

In this menu, you schedule longer changes in heating, ventilation and hot water temperature.

You can also schedule settings for certain installed accessories.

If a room sensor is installed and activated, the desired room temperature (°C) is set during the time period.

If a room sensor is not activated, the desired offset of the heating curve is set. One step is usually enough to change the room temperature by one degree, but in some cases several steps may be required.

TIP!

Stop the holiday setting about a day before your return so that room temperature and hot water have time to return to their usual levels.

NOTE!

Holiday settings finish on the selected date. If you want to repeat the holiday setting once the end date has passed, go into the menu and change the date.

NOTE!

If the exhaust air temperature falls below 10°C, the compressor is blocked and electric additional heat is permitted. Heat is not recovered from the exhaust air when the compressor is blocked.

NOTE!

In installations with water heaters without an immersion heater connected to S735, "hot water comfort" should not be set to "Off" when the Holiday setting is activated.

MENU 6.2 - SCHEDULING

In this menu, you schedule repeated changes in heating, ventilation and hot water.

You can also schedule settings for certain installed accessories.

NOTE!

Scheduling is repeated according to the selected setting (e.g. every Monday) until you manually deactivate it in the menu.

A mode contains settings that will apply to scheduling. Create a mode with one or more settings by pressing "New mode".

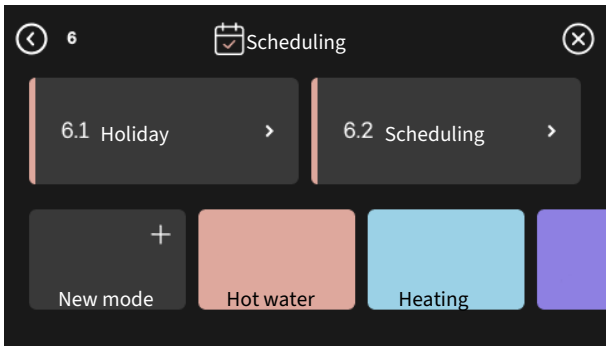

Select the settings that the mode will contain. Drag to the left with your finger to select mode name and colour to make it unique and to distinguish it from other modes.

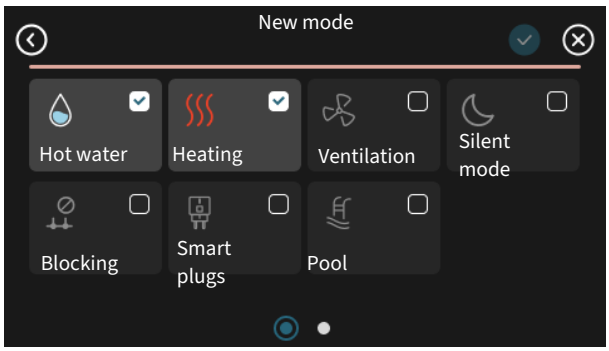

Select an empty row and press it to schedule a mode, and adjust as required. You can enter a tick, if a mode is to be active during the day or overnight.

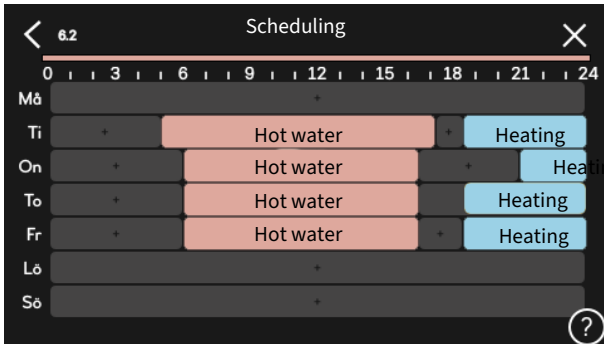

If a room sensor is installed and activated, the desired room temperature (°C) is set during the time period.

If a room sensor is not activated, the desired offset of the heating curve is set. One step is usually enough to change the room temperature by one degree, but in some cases several steps may be required.

Menu 7 - Installer settings

OVERVIEW

7.1 - Operating settings	7.1.1 - Hot water	7.1.1.1 - Temperature setting
	7.1.2 - Circulation pumps	7.1.2.2 - Pp sp. heating medium GP1
	7.1.3 - Compressor	7.1.3.1 - BlockFreq
	7.1.4 - Ventilation	7.1.4.1 - Fan speed, exhaust air
		7.1.4.2 - Fan speed, supply air[1]
		7.1.4.3 - Fine-tuning the ventilation
		7.1.4.4 - Demand contr. ventilation[1]
	7.1.5 - Add. heat	7.1.5.1 - Int elec add heat
	7.1.6 - Heating	7.1.6.1 - Max diff supply temp
		7.1.6.2 - Flow settings, climate sys
		7.1.6.3 - Power at DOT
	7.1.8 - Alarms	7.1.8.1 - Alarm actions
		7.1.8.2 - Emergency mode
	7.1.9 - Load monitor	
	7.1.10 - System settings	7.1.10.1 - Operating prioritisation
		7.1.10.2 - Auto mode setting
		7.1.10.3 - Degree minute settings
		7.1.10.6 - Limitation room temp.
7.2 - Accessory settings[1]	7.2.1 - Add/remove accessories	
	7.2.19 - External energy meter	
7.4 - Selectable in/outputs	7.4.1 - Enter a name BT37.x	
	7.4.2 - External power limiting	
7.5 - Tools	7.5.1 - Heat pump, test	7.5.1.1 - Test mode
	7.5.2 - Underfloor drying function	
	7.5.3 - Forced control	
	7.5.6 - Inverter replacement	
	7.5.8 - Screen lock	
	7.5.9 - Modbus TCP/IP	
	7.5.13 - Third-party integration	7.5.13.1 - Modbus TCP/IP Ext.
		7.5.13.2 - EEBUS
	7.5.15 - Local REST API	
	7.5.16 - Revert softw upd	
7.6 - Factory setting service		
7.7 - Start guide		
7.8 - Quick start		
7.9 - Logs	7.9.1 - Change log	
	7.9.2 - Message log	
	7.9.3 - Black box	

1 Consult the accessory's Installer Manual.

MENU 7.1 - OPERATING SETTINGS

Make operating settings for the system here.

MENU 7.1.1 - HOT WATER

This menu contains advanced settings for hot water operation.

MENU 7.1.1.1 - TEMPERATURE SETTING

Start temperature

Demand mode, small/medium/large
Setting range: 5 – 70 °C

Stop temperature

Demand mode, small/medium/large
Setting range: 5 – 70 °C

Stop temp. periodic increase
Setting range: 55 – 70 °C

"Start temperature" and "Stop temperature" for demand mode small/medium/large: Here, you set the start and stop temperature of the hot water for the different demand modes (menu 2.2).

"Stop temp. periodic increase": Here, you set the stop temperature for periodic increase (menu 2.4).

MENU 7.1.2 - CIRCULATION PUMPS

This menu contains submenus where you can make advanced circulation pump settings.

MENU 7.1.2.2 - PP SP. HEATING MEDIUM GP1

Heating

Auto
Alternative: on/off

Manual speed
Setting range: 1 - 100 %

Minimum permitted speed
Setting range: 1 - 50 %

Maximum permitted speed
Setting range: 50 - 100 %

Speed in wait mode
Setting range: 1 - 100 %

Hot water

Auto
Alternative: on/off

Manual speed
Setting range: 1 - 100 %

Make settings here for the heating medium pump's speed in the current operating mode, for example in heating or hot water operation. Which operating modes can be changed depends on which accessories are connected.

Heating

"Auto": Here, you set whether the heating medium pump is to be regulated automatically or manually.

"Manual speed": If you have opted to control the heating medium pump manually, you set the desired pump speed here.

"Minimum permitted speed": Here, you can restrict the pump speed to ensure that the heating medium pump is not allowed to operate at a lower speed in auto mode than the set value.

"Maximum permitted speed": Here, you can restrict the pump speed to ensure that the heating medium pump is not allowed to operate at a higher speed than the set value.

"Speed in wait mode": Here, you set the speed the heating medium pump will have in standby mode. Standby mode occurs when heating operation is permitted but there is no need for either compressor operation or electric additional heat.

Hot water

"Auto": Here, you set whether the heating medium pump is to be regulated automatically or manually in hot water mode.

"Manual speed": If you have opted to control the heating medium pumps manually, you set the desired pump speed here in hot water mode.

MENU 7.1.3 - COMPRESSOR

This menu contains sub-menus where you can make advanced compressor settings.

MENU 7.1.3.1 - BLOCKFREQ

Block freq 1 and 2
Setting range start: 15 – 92 Hz

Setting range stop: 18 – 95 Hz

Maximum setting range: 50 Hz

Here you can set a frequency range where the compressor is blocked. The limits for the setting range can differ depending on model of heat pump.

CAUTION!

A large blocked frequency range can cause the compressor to run jerkily.

CAUTION!

Blocking peak output in S735 can lead to reduced savings.

MENU 7.1.4 - VENTILATION

This menu contains sub-menus, where you can make advanced ventilation settings.

NOTE!

An incorrectly set ventilation flow can damage the property and may also increase energy consumption.

MENU 7.1.4.1 - FAN SPEED, EXHAUST AIR

Fan sync operation
Alternative: on/off

High outdoor temperature
Alternative: on/off

Red. vent at high outd temp
Setting range: 20 – 40 °C

Fan speed
Setting range: 0 – 100%

Fan incr. permitted
Alternative: on/off

Set the speed for the five different selectable speeds for the fan here.

Fan sync operation: Here, select whether the fan is to maintain the same speed, regardless of whether the compressor is operating or not, or alternatively run at different speeds. If the function is activated, fan speed "Normal" applies when the compressor is not in operation, and 3 fan speed applies when the compressor is in operation. This function is mainly used on those markets where the statutory ventilation flow is below the min. airflow.

Fan incr. permitted: This function provides a longer operating time for the compressor between defrosts, although the function can entail an elevated noise level. Fan increase is always permitted if normal speed is 70% or lower. If you choose to activate "Fan incr. permitted", this means that the function is also permitted at speeds above 70%.

MENU 7.1.4.3 - FINE-TUNING THE VENTILATION

Fine-tuning the ventilation
Alternative: on/off

Real air flow
Setting range S735-4: 50 – 400 m³/h

Setting range S735-7: 70 – 400 m³/h

Fan incr. permitted
Alternative: on/off

Fan speed, exhaust air
Setting range: 0 - 100 %

In most cases, the ventilation adjustments are performed via "Start guide", but this can also be done in this menu. You set the air flow and adjust the fan speed.

Fine-tuning the ventilation: Activate this function while the ventilation is being adjusted.

Real air flow: Here, you set the actual air flow as measured during the ventilation adjustment.

Fan incr. permitted: This function provides a longer operating time for the compressor between defrosts, although the function can entail an elevated noise level. Fan increase is always permitted if normal speed is 70% or lower. If you choose to activate "Fan incr. permitted", this means that the function is also permitted at speeds above 70%.

Fan speed, exhaust air: Here, you can change the fan speed while "Fine-tuning the ventilation" is activated.

CAUTION!

If the fan speed is too high during adjustment, information that it needs to be reduced is given at the bottom of the page.

CAUTION!

When this setting is made, it is important that the ventilation flow is in a stable condition.

The function is deactivated when you exit the menu.

MENU 7.1.5 - ADD. HEAT

This menu contains sub-menus where you can make advanced additional heat settings.

MENU 7.1.5.1 - INT ELEC ADD HEAT

Max. set electrical power
Setting range: 0 - 9 kW

Max set el power (SG Ready)
Setting range: 0 - 9.0 kW

Here you set the max electrical power for the internal electric additional heat in S735, during normal operation and in overcapacity mode (SG Ready).

MENU 7.1.6 - HEATING

This menu contains sub-menus where you can make advanced settings for heating operation.

MENU 7.1.6.1 - MAX DIFF SUPPLY TEMP

Max diff compressor
Setting range: 1 – 25 °C

Max diff additional heat
Setting range: 1 – 24 °C

Here you set the maximum permitted difference between the calculated and actual supply temperature in the event of compressor or additional heat mode respectively. Max difference additional heat can never exceed max difference compressor

"Max diff compressor": If the current supply temperature *exceeds* the calculated flow by the set value, the degree minute value is set to 1. The compressor stops when there is only a heating demand.

"Max diff additional heat": If "Additional heat" is selected and activated in menu 4.1 and the current supply temperature *exceeds* the calculated temperature by the set value, the additional heat is forced to stop.

MENU 7.1.6.2 - FLOW SETTINGS, CLIMATE SYS

Setting
Options: Radiator, Underfl heating, Rad + Und. heat., Own setting

DOT
Setting range DOT: -40.0 – 20.0 °C

Delta temp at DOT
Setting range dT at DOT: 1.0 – 25.0 °C

The type of heating distribution system the heating medium pump works towards is set here.

dT at DOT is the difference in degrees between supply and return temperatures at design outdoor temperature.

MENU 7.1.6.3 - POWER AT DOT

Manually selected power at DOT
Alternative: on/off

Power at DOT
Setting range: 1 – 1,000 kW

Here, you set the power the property requires at DOT (dimensioned outdoor temperature).

If you choose not to activate "Manually selected power at DOT", the setting is made automatically, i.e. S735 calculates suitable power at DOT.

MENU 7.1.8 - ALARMS

In this menu, you make settings for the safety measures that S735 will implement in the event of any operational disruption.

MENU 7.1.8.1 - ALARM ACTIONS

Reduce room temperature
Alternative: on/off

Stop producing HW
Alternative: on/off

Audio signal on alarm
Alternative: on/off

Select how you want the S735 to alert you that there is an alarm in the display here.

NOTE!

To be able to select "Start auxiliary mode" in the event of a malfunction, an alarm action must be selected.

If no alarm action is selected, this can result in higher energy consumption in the event of a malfunction. For more information, see section “Manage alarm".

MENU 7.1.8.2 - EMERGENCY MODE

Immersion heater output
Setting range: 4 – 9 kW

Settings are made in this menu for how the additional heat will be controlled in emergency mode.

NOTE!

In emergency mode, the display is switched off. If you feel the selected settings are insufficient in emergency mode, you will not be able to change these.

MENU 7.1.9 - LOAD MONITOR

Fuse size
Setting range: 1 – 400 A

Transformer ratio
Setting range: 300 – 3,000

Detect phase sequence
Here, you activate the phase detection.

Here, you set fuse size and transformer ratio for the system. The transformer ratio is the factor that is used to convert the metered voltage to current.

Here, you can also check which current sensor is installed on which incoming phase to the property (this requires the current sensors to be installed). Perform the check by selecting "Detect phase sequence".

TIP!

Search again, if the phase detection fails. The detection process is very sensitive and is easily affected by other appliances in the property.

MENU 7.1.10 - SYSTEM SETTINGS

Here, you can adjust various system settings for the installation.

MENU 7.1.10.1 - OPERATING PRIORITISATION

Auto mode
Alternative: on/off

Min
Setting range: 0 – 180 minutes

Here, you select how long the installation will work with each demand, if there are several simultaneous demands.

"Operating prioritisation" is normally set in "Auto mode", but it is also possible to set prioritisation manually.

"Auto mode": In auto mode, S735 optimises operating times between different requirements.

"Manual": Select how long the installation will work with each demand, if there are several demands at the same time.

If there is only one demand, the installation works with that demand.

If 0 minutes are selected, this means that the demand is not prioritised, but will instead only be activated when there is no other demand.

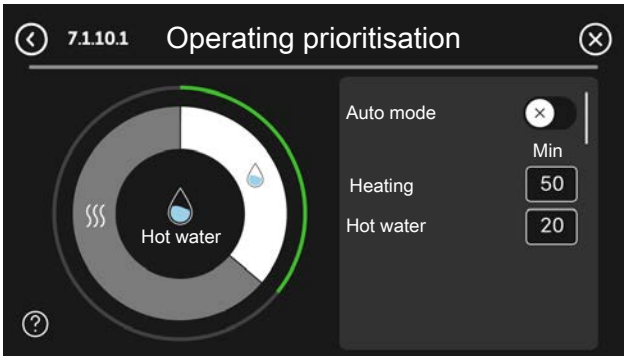

MENU 7.1.10.2 - AUTO MODE SETTING

Stop heating
Setting range: -20 – 40 °C

Stop additional heat
Setting range: -25 – 40 °C

Filtering time heating
Setting range: 0 – 48 h

"Stop heating", "Stop additional heat": In these menu options, you set the temperatures that the system will use for control in auto mode.

NOTE!

It cannot be set "Stop additional heat" higher than "Stop heating".

"Filtering time heating": You can set the time over which the average outdoor temperature is calculated. If you select 0, the current outdoor temperature is used.

MENU 7.1.10.3 - DEGREE MINUTE SETTINGS

Current value
Setting range: -3,000 – 100 DM

Heating, auto
Alternative: on/off

Start compressor
Setting range: -1,000 – (-30) DM

Relative DM start additional heat
Setting range: 100 – 2,000 DM

Diff. between add heat steps
Setting range: 10 – 1,000 DM

DM = degree minutes

Degree minutes (DM) are a measure of the current heating demand in the property and determine when the compressor or additional heat will start/stop.

NOTE!

Higher value on "Start compressor" gives more compressor starts, which increase wear on the compressor. Too low value can give uneven indoor temperatures.

MENU 7.1.10.6 - LIMITATION ROOM TEMP.

Heating

Highest adjustable temperature
Setting range: 5 - 35 °C

Here, you set the lowest and highest indoor temperature for heating demand. It is not possible to drop below or exceed the temperature limitation in other settings, e.g. room sensor settings.

MENU 7.2 - ACCESSORY SETTINGS

The operating settings for accessories that are installed and activated are made in the sub-menus for this.

MENU 7.2.1 - ADD/REMOVE ACCESSORIES

Here, you tell S735 which accessories are installed.

To identify connected accessories automatically, select "Search for accessories". It is also possible to select accessories manually from the list.

MENU 7.2.19 - PULSE ENERGY METER

Activated
Alternative: on/off

Set mode
Alternatives: Energy per pulse / Pulses per kWh

Energy per pulse
Setting range: 0 – 10000 Wh

Pulses per kWh
Setting range: 1 – 10000

Up to two electricity meters (BE6, BE7) or energy meters (BF2, BF3) can be connected to S735.

"Energy per pulse": Here, you set the amount of energy to which each pulse will correspond.

"Pulses per kWh": Here, you set the number of pulses per kWh that are sent to S735.

TIP!

"Pulses per kWh" is set and presented in whole numbers. If a higher resolution is required, use "Energy per pulse".

MENU 7.4 - SELECTABLE IN/OUTPUTS

Here, you state where the external switch function has been connected, either to one of the AUX inputs on terminal block X28 or to the AUX output on terminal block X27.

MENU 7.4.1 - ENTER A NAME BT37.X

In this menu, you can change the name of the AUX-connected BT37 sensors.

The sensor's designation (BT37.1, BT37.2, BT37.3, BT37.4, BT37.5, BT37.6) will be added to the name you give the sensor.

MENU 7.4.2 - EXTERNAL POWER LIMITING

External power limitation
Setting range: 1.1 – 100.0 kW

For markets where the mains network operator requires dynamic control of the mains network's load.

In this menu, you set the fixed value to which the compressor's and the immersion heater's operating power will be limited.

This function is suitable for use during the hours when the property is using the most electricity.

MENU 7.5 - TOOLS

Here, you can find functions for maintenance and service work.

MENU 7.5.1 - HEAT PUMP, TEST

CAUTION!

This menu and its sub-menus are intended for testing the heat pump.

Use of this menu for other reasons may result in the installation not functioning as intended.

MENU 7.5.2 - UNDERFLOOR DRYING FUNCTION

Length period 1 – 7
Setting range: 0 – 30 days

Temperature period 1 – 7
Setting range: 15 – 70 °C

Set the function for under floor drying here.

You can set up to seven time periods with different calculated supply temperatures. If fewer than seven periods are to be used, set the remaining periods to 0 days.

When the underfloor drying function has been activated, a counter is displayed showing the number of full days the function has been active. The function counts degree minutes in the same way as during normal heating operation, but for the supply temperatures that are set for the respective period.

TIP!

If operating mode "Add. heat only" is to be used, select it in menu 4.1.

For a more even supply temperature, the additional heat can be started earlier by setting "Relative DM start additional heat" in menu 7.1.10.3 to 100 DM. When set underfloor drying periods have finished, reset the menus 4.1 and 7.1.10.3 as per previous settings.

MENU 7.5.3 - FORCED CONTROL

Here you can force control the various components in the installation. The most important safety functions remain active however.

To be able to force control certain components, the compressor may need to be preheated.

CAUTION!

Forced control is only intended to be used for troubleshooting purposes. Using the function in any other way may cause damage to the components in the installation.

MENU 7.5.6 - INVERTER REPLACEMENT

This menu includes a guide that is used during inverter replacement.

The menu is only visible when communication with the inverter is lost.

MENU 7.5.8 - SCREEN LOCK

Here, you can choose to activate the screen lock for S735. During activation, you will be asked to enter the required code (four digits). The code is used when:

- deactivating the screen lock.
- changing the code.
- starting up the display when it has been inactive.
- restarting/starting up S735.

MENU 7.5.9 - MODBUS TCP/IP

Alternative: on/off

Here, you activate Modbus TCP/IP.

MENU 7.5.13 - THIRD-PARTY INTEGRATION

Here, you manage connections to external services.

MENU 7.5.13.1 - MODBUS TCP/IP EXT.

Alternative: on/off

Here, you activate Modbus TCP/IP for external services.

MENU 7.5.13.2 - EEBUS

Alternative: on/off

Here, you can activate EEBUS communication.

MENU 7.5.15 -LOCAL REST API

Activated
Alternative: on/off

IP address restriction
Alternative: on/off

Read only REST API
Alternative: on/off

Here, you make settings for local REST API.

In the menu there is a URL that links to REST API documentation, which makes it easier to get started.

The provided fingerprint is the security certificate and can be used to ensure that the communication is to the correct unit.

MENU 7.5.16 -REVERT SOFTW UPD

Alternative: on/off

Here, you restore the software to the previous software version.

MENU 7.6 - FACTORY SETTING SERVICE

Here, you can reset all settings (including settings available to the user) to factory values

Also new parametrisation of the inverter can be done here.

> **CAUTION!**
> When resetting, the start guide is displayed the next time S735 restarts.

MENU 7.7 - START GUIDE

When S735 is started for the first time, the start guide is automatically activated. From this menu, you can start it manually.

MENU 7.8 - QUICK START

You can quick start the compressor here.

One of the following demands for the compressor must exist for quick start:

- heating
- hot water

> **NOTE!**
> For it to be possible to quick-start the compressor, it must have reached the correct temperature. It can take up to 30 minutes to preheat the compressor.

> **NOTE!**
> Too many quick starts in a short space of time may damage the compressor and its auxiliary equipment.

MENU 7.9 - LOGS

Under this menu, there are logs that collect information about alarms and changes made. The menu is intended to be used for troubleshooting.

MENU 7.9.1 - CHANGE LOG

Read off any previous changes to the control system here.

> **CAUTION!**
> The change log is saved at restart and remains unchanged after factory setting.

MENU 7.9.2 - MESSAGE LOG

This log is intended to be used for troubleshooting.

MENU 7.9.3 - BLACK BOX

Via this menu, it is possible to export all logs (Change log, Message log) to USB. Connect a USB memory and select the log(s) you want to export.

Service

> **CAUTION!**
> Servicing and maintenance should only be carried out by persons with the necessary expertise.
>
> When replacing components on S735 only replacement parts from NIBE may be used.

> **NOTE!**
> The fan is in operation, even when S735 is turned off and the status lamp is lit with a blue light.

Maintenance

Inform the user of necessary maintenance action.

CLEANING THE FLOOR DRAIN

Condensation forms when the heat pump is working. This condensation is routed via an overflow cup (WM1) to a drain, e.g. a floor drain.

The condensation water contains a certain amount of dust and particles.

Check regularly that any floor drains are not blocked; water must be able to run through freely. Clean, if necessary.

> **CAUTION!**
> If the floor drain is blocked, water can flow over onto the floor in the installation area. To prevent damage to the property, a waterproof floor or floor membrane is recommended.

Service actions

EMERGENCY MODE

> **CAUTION!**
> Do not start the system before filling up with water. Components in the system could be damaged.

Emergency mode is used in event of operational interference and in conjunction with service.

When the emergency mode is active, the status lamp is yellow.

You can activate the emergency mode both when S735 is running and when it is switched off.

To activate when S735 is running: press and hold the on/off button (SF1) for 2 seconds and select "Emergency mode" from the shutdown menu.

To activate emergency mode when S735 is switched off: press and hold the on/off button (SF1) for 5 seconds. (Deactivate the emergency mode by pressing once).

When S735 is put in emergency mode, the display is switched off and the most basic functions are active:

- The immersion heater works to maintain the calculated supply temperature. If there is no outdoor temperature sensor (BT1), the immersion heater works to maintain the maximum supply temperature, set in menu 1.30.6 - "Highest supply heat".
- The compressor is off and only the fan, the heating medium pump and the electric additional heat are active. Max output for the immersion heater in emergency mode, limited according to the setting in menu 7.1.8.2 - "Emergency mode".

DRAINING THE HOT WATER HEATER

The hot water can drained as follows:

- through the safety valve (FL1) via the overflow cup (WM1)
- through a hose that is connected to the safety valve's (FL1) outlet

> **CAUTION!**
> There may be some hot water, risk of scalding.

Draining with hose via the safety valve:

1. Disconnect the overflow pipe from the safety valve (FL1).
2. Fit a hose to a drain pump.
3. Open the safety valve (FL1).
4. Open a hot water tap to let air into the system. If this is not enough, disconnect the hot water connection (XL4).

DRAINING THE CLIMATE SYSTEM IN THE HEAT PUMP

> **CAUTION!**
> There may be some hot water, risk of scalding.

In order to carry out service on the climate system, it may be easier to drain the system first.

The hot water can drained as follows:

- through the draining valve (XL10)
- through the safety valve (FL2) via the overflow cup (WM1)
- through a hose that is connected to the safety valve's (FL2) outlet

1. Open the safety valve/drain valve.
2. Set the vent valves for the climate system (QM20), (QM22), (QM24), (QM26) in the open position for air supply.

> **CAUTION!**
>
> The heat pump should not, after draining, be exposed to risk of freezing because a certain of water remains in the coil.

CHECKING THE MAGNETITE INDICATOR

The filter ball valve contains a magnetite indicator that shows whether there are magnetic particles in the climate system water.

When checking the magnetite indicator, the filter in the filter ball valve should also be cleaned.

To check the magnetite indicator:

1. Switch off S735 by pressing the on/off button (SF1).
2. Close the filter ball valve.
3. Remove the locking ring in the valve.
4. Take out the magnet from the filter ball valve and check whether there is magnetite on it. Wipe it off if necessary.
5. Reinstall the magnet.
6. Reinstall the locking ring. Check that it sits in the groove.
7. If there was a lot of magnetite on the magnet, the climate system should be flushed clean and/or a magnetite filter installed.

TEMPERATURE SENSOR DATA

Temperature (°C)	Resistance (kOhm)	Voltage (VDC)
-10	56.20	3.047
0	33.02	2.889
10	20.02	2.673
20	12.51	2.399
30	8.045	2.083
40	5.306	1.752
50	3.583	1.426
60	2.467	1.136
70	1.739	0.891
80	1.246	0.691

> **NOTE!**
>
> The discharge sensor (BT14) has a different characteristic.

USB SERVICE OUTLET

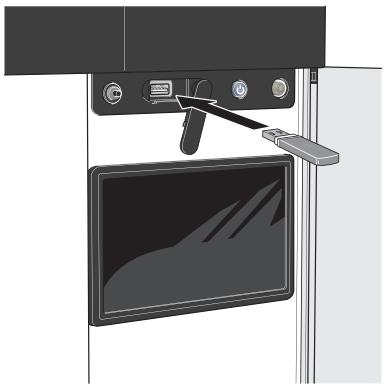

When a USB memory is connected, a new menu (menu 8) appears in the display.

Menu 8.1 - Update the software

You can update the software with a USB memory in menu 8.1 - "Update the software".

> **CAUTION!**
>
> In order to update using a USB memory, the memory must contain a file with software for S735 from NIBE.
>
> Software for S735 can be downloaded from myuplink.com.

One or more files are shown in the display. Select a file and press "OK".

> **TIP!**
>
> A software update does not reset the menu settings in S735.

> **NOTE!**
>
> If the update is interrupted before it is complete (e.g. during a power cut), the software is automatically restored to the previous version.

Restoring the software via menu

Restoring the software to the previous version is performed in menu 7.5.16 - "Revert softw upd".

Manual restoring of software

If you want to restore the software to the previous version manually:

1. Switch off S735 via the shutdown menu. The status lamp goes out, off/on button light up blue.
2. Press the on/off button once.
3. When the on/off button changes colour from blue to white, press and hold the on/off button.
4. When the status lamp changes to green, release the on/off button.

NOTE!

If the status lamp should turn yellow at any time, S735 has ended up in emergency mode and the software has not been restored.

Menu 8.2 - Logging

Interval
Setting range: 1 s – 60 min

Here you can choose how current measurement values from S735 should be saved onto a log file on the USB memory.

1. Set the desired interval between loggings.
2. Select “Start logging".
3. The relevant measurement values from S735 are now saved in a file on the USB memory at the set interval until you select "Stop logging".

NOTE!

Select "Stop logging" before removing the USB memory.

Logging floor drying

Here you can save a floor drying log on the USB memory and in this way see when the concrete slab reached the correct temperature.

- Make sure that "Underfloor drying function" is activated in menu 7.5.2.
- A log file is now created, where the temperature and the immersion heater output can be read off. Logging continues until "Underfloor drying function" is stopped.

NOTE!

Close "Underfloor drying function" before removing the USB memory.

Menu 8.3 - Manage settings

Save settings
Alternative: on/off

Display backup
Alternative: on/off

Restore settings
Alternative: on/off

In this menu, you save/upload menu settings to/from a USB memory stick.

Save settings: Here, you save menu settings in order to restore them later or to copy the settings to another S735.

Display backup: Here, you save both menu settings and measurement values, such as energy data.

NOTE!

When you save menu settings to the USB memory, you replace any previously saved settings on the USB memory.

Restore settings: Here, you upload all menu settings from the USB memory stick.

NOTE!

Resetting of menu settings from the USB memory cannot be undone.

Menu 8.5 -Export energy logs

In this menu, you can save energy logs to a USB memory.

MODBUS TCP/IP

S735 has built-in support for Modbus TCP/IP, which is activated in menu 7.5.9 - "Modbus TCP/IP".

TCP/IP settings are set in menu 5.2 - "Network settings". Only connections from IP addresses within the local address space as specified below:

10.0.0.0 - 10.255.255.255

172.16.0.0 - 172.31.255.255

192.168.0.0 - 192.168.255.255

Modbus protocol uses port 502 for communication.

Readable	ID	Description
Read	0x04	Input Register
Read writable	0x03	Holding Register
Writable multiple	0x10	Write multiple registers
Writable single	0x06	Write single register

Available registers are shown in the display for the currect product and its installed and activated accessories.

Export register

1. Insert a USB memory.
2. Go to menu 7.5.9 and choose "Export most used registers"or"Export all registers". These will then be stored on the USB memory in CSV format. (These options is only shown when a USB memory in inserted in the display).

IP address restriction

1. Go to menu 7.5.9 and choose "IP address restriction".
2. Enter the IP address that is allowed to communicate with the installation.

CAUTION!

Modbus/TCP communication over the open internet is very risky and is not recommended!

MAC address

Go to menu 3.1.13 - "Connections" to see the MAC address.

Reading only

Reading Modbus only means that no values can be sent to the system, only reading of values is possible.

LOCAL REST API

REST API is a secure, local alternative to MODBUS TCP/IP. REST API is well-known, self-descriptive and lists parameters, as well as being easy to integrate with other systems.

Go to menu 7.5.15 - "Local REST API" to activate the function.

Disturbances in comfort

In most cases, the S735 notes a malfunction and indicates this with alarms and presents action instructions in the display.

Info-menu

All the heat pump's measurement values are gathered under menu 3.1 - "Operating info" in the heat pump's menu system. Looking through the values in this menu can often simplify finding the fault source.

Manage alarm

In the event of an alarm, a malfunction has occurred and the status lamp shines with a steady red light. You receive information about the alarm in the smartguide on the display.

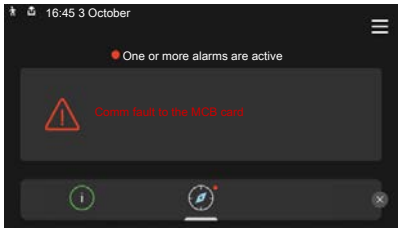

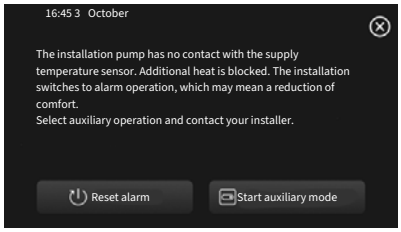

ALARM

In the event of an alarm with a red status lamp, a malfunction has occurred that S735 cannot remedy itself. On the display, you can see what type of alarm it is and reset it.

In many cases, it is sufficient to select "Reset alarm" for the installation to revert to normal operation.

If a white light comes on after selecting "Reset alarm", the alarm has been remedied.

"Auxiliary operation" is a type of emergency mode. This means that the installation tries to produce heat and/or hot water, even though there is some kind of problem. This could mean that the compressor is not in operation. In this case, any electric additional heating produces heat and/or hot water.

NOTE!

To select "Start auxiliary mode", an alarm action must be selected in the menu 7.1.8.1 - "Alarm actions".

NOTE!

Selecting "Start auxiliary mode" is not the same as correcting the problem that caused the alarm. Therefore, the status lamp will remain red.

Troubleshooting

If the operational interference is not shown in the display the following tips can be used:

BASIC ACTIONS

Start by checking the following items:

- Group and main fuses of the building.
- The building's earth circuit breaker.
- The heat pump's RCD.
- Miniature circuit-breaker for S735 (FC1).
- Correctly set load monitor.

LOW HOT WATER TEMPERATURE OR A LACK OF HOT WATER

- Closed or choked filling valve (QM10) for the hot water.
  - Open the valve.
- Mixer valve set too low.
  - Adjust the mixer valve.
- S735 in incorrect operating mode.
  - Enter menu 4.1 - "Operating mode". If "Auto" mode is selected, select a higher value for "Stop additional heat" in menu 7.1.10.2 - "Auto mode setting".
  - If mode "Manual" is selected, select "Additional heat".
- Large hot water consumption.
  - Wait until the hot water has heated up. Temporarily increased hot water capacity can be activated in the "Hot water" home screen, in menu 2.1 - "More hot water" or via myUplink.
- Too low hot water setting.
  - Enter menu 2.2 - "Hot water demand" and select a higher demand mode.
- Too low or no operating prioritisation of hot water.
  - Enter menu 7.1.10.1 - "Operating prioritisation" and increase the time for when hot water is to be prioritised. Note that, if the time for hot water is increased, the time for heating production is reduced, which can give lower/uneven room temperatures.
- "Holiday" activated in menu 6.
  - Enter menu 6 and deactivate.

LOW ROOM TEMPERATURE

- Closed thermostats in several rooms.
  - Set the thermostats to max in as many rooms as possible. Adjust the room temperature via the indoor temperature home screen instead of choking the thermostats.
- S735 in incorrect operating mode.

- Enter menu 4.1 - "Operating mode". If "Auto" mode is selected, select a higher value for "Stop heating" in menu 7.1.10.2 - "Auto mode setting".
- If mode "Manual" is selected, select "Heating". If this is not enough, also select "Additional heat".

- Too low set value on the automatic heating control.
  - Adjust via the smart guide or the indoor temperature home screen.
  - If the room temperature is only low in cold weather, the curve slope in menu 1.30.1 - "Curve, heating" may need to be adjusted upwards.
- Too low or no operating prioritisation of heat.
  - Enter menu 7.1.10.1 - "Operating prioritisation" and increase the time for when heating is to be prioritised. Note that if the time for heating is increased, the time for hot water production is reduced, which can give a smaller amount of hot water.
- Hot water demand "Large" selected in combination with large hot water outlet.
  - When you have selected hot water demand "Large", S735 prioritises hot water production over heat production.

    If you want to change hot water mode: Enter menu 2.2 and select "Small" or "Medium".
- "Holiday" activated in menu 6 - "Scheduling".
  - Enter menu 6 and deactivate.
- External switch for changing room temperature activated.
  - Check any external switches.
- The heating medium pump (GP1 has stopped.
- Air in the climate system.
  - Vent the climate system.
- Closed valve (QM31) to the climate system.
  - Open the valve.
- Incorrect value set in menu 7.1.5.1 - "Int elec add heat".
  - Enter menu 7.1.5.1 and increase the value on "Max. set electrical power".

HIGH ROOM TEMPERATURE

- Too high set value on the automatic heating control.
  - Adjust via the smart guide or the indoor temperature home screen.
  - If the room temperature is only high in cold weather, the curve slope in menu 1.30.1 - "Curve, heating" may need to be adjusted downwards.
- External switch for changing room temperature activated.
  - Check any external switches.

LOW SYSTEM PRESSURE

- Not enough water in the climate system.
  - Fill the climate system with water and check for leaks (see chapter "Filling and venting").

LOW OR A LACK OF VENTILATION

- The exhaust air filter (HQ10) is clogged.
  - Change the filter.
- The ventilation is not adjusted.
  - Order/implement ventilation adjustment.
- Exhaust air device blocked or throttled down too much.
  - Check and clean the exhaust air devices.
- Fan speed in reduced mode.
  - Enter menu 1.2.1 - "Fan speed" and select "Normal"
- Scheduling activated.
  - Enter menu 6 - "Scheduling". Switch off the function or adjust the settings.
- External switch for changing the fan speed activated.
  - Check any external switches.

HIGH OR DISTRACTING VENTILATION

- The exhaust air filter (HQ10) is clogged.
  - Change the filter.
- The ventilation is not adjusted.
  - Order/implement ventilation adjustment.
- Fan speed in forced mode.
  - Enter menu 1.2.1 - "Fan speed" and select "Normal"
- Night cooling activated.
  - Enter menu 1.2.2 - "Night cooling". Switch off the function or adjust the settings.
- Scheduling activated.
  - Enter menu 6 - "Scheduling". Switch off the function or adjust the settings.
- External switch for changing the fan speed activated.
  - Check any external switches.

THE COMPRESSOR DOES NOT START

- There is no heating or hot water demand.
  - S735 does not call on heating or hot water.
- The heat pump defrosts.
  - The compressor starts, when defrosting is complete.
- Compressor blocked due to the temperature conditions.
  - Wait until the temperature is within the product's working range.
- Minimum time between compressor starts has not been reached.
  - Wait for at least 30 minutes and then check if the compressor has started.

- Alarm tripped.
  - Follow the display instructions.

Accessories

Detailed information about the accessories and complete accessories list available at nibe.eu.

Not all accessories are available on all markets.

SPLITTER KIT DKI
For split installation of S735.

DKI S10
The air treatment unit is placed a maximum of 80 cm from the water heater unit.
Part no. 067 797

DOCKING KIT DEW S42
DEW S42 means that S735 can be connected to the heat pump water heater VPB S200.

Part no. 067 796

DOCKING KIT DEW S43
DEW S43 means that S735 can be connected to the heat pump water heater AHPH S/AHPS S/VPB S300/VPBS S300.

Part no. 067 800

EXTRA SHUNT GROUP ECS
This accessory is used when S735 is installed in a property with two or more climate systems that require different supply temperatures.

ECS 40
Max 80 m²
Part no 067 287

ECS 41
Approx. 80-250 m²
Part no 067 288

HUMIDITY AND TEMPERATURE SENSOR HTS 40
This accessory is used to show and regulate humidity.

Part no. 067 538

ROOM UNIT RMU S40
The room unit is an accessory with a built-in room temperature sensor and humidity sensor, which allows the control and monitoring of S735 to be carried out in a different part of the property to where it is located.

Part no. 067 650

SOLAR PACKAGE NIBE PV
NIBE PV is a modular system consisting of solar panels, assembly parts and inverters, which is used to produce electricity in-house.

ACCESSORY BOARD AXC 20
Accessory board for hot water circulation, damper for frost protection and/or external heating medium pump.

Part no. 067 609

SUPPLY AIR MODULE SAM
SAM is a supply air module specially developed for properties with supply and exhaust air systems.

Select model based on the property's supply air flow.

SAM S42
(approx. 20-85 l/s)
Part no. 067 794

SAM S44
(approx. 42-125 l/s)
Part no. 067 795

WIRELESS ACCESSORIES
It is possible to connect wireless accessories from NIBE to S735, e.g. room, humidity, CO_2 sensors.

OUTDOOR AIR MIXING OEK S20
OEK S20 is an accessory that enables S735 to operate with both exhaust air and outdoor air.

OEK S20 is connected to AUX; if additional AUX functions are wanted, accessory board AXC 20 is required.

Part no. 067 799

HEAT PUMP WATER HEATER

AHPS S
Heat pump water heater without an immersion heater with a solar coil (copper corrosion protection) and a hot water coil (stainless steel corrosion protection).
Requires that the whole installation (S735 and AHPS S) is positioned at a distance of 60 mm from the rear wall.
Requires docking kit.
Part no. 080 136

AHPH S
Heat pump water heater without an immersion heater with an integrated hot water coil (stainless steel corrosion protection).
Requires that the whole installation (S735 and AHPH S) is positioned at a distance of 60 mm from the rear wall.
Requires docking kit.
Part no. 080 137

VPB S
Heat pump water heater without an immersion heater with a charge coil.

Requires docking kit.

VPB S200
Corrosion protection:
Stainless Part no. 081 141

VPB S300
Corrosion protection:
Stainless Part no. 081 143

VPBS S
Heat pump water heater without immersion heater with charging and solar coil. Requires the whole installation (S735 and VPBS S300) to be positioned at a distance of 60 mm from the rear wall. Requires docking kit.

VPBS S300
Copper Part no. 081 145
Enamel Part no. 081 146

TOP CABINET TOC 40

Top cabinet, which conceals any pipes/ventilation ducts.

Height 245 mm
Part no. 089 756

Height 345 mm
Part no. 089 757

Height 445 mm
Part no. 067 522

Height 385 - 635 mm
Part no. 089 758

Technical data

Dimensions

S735 installed as one unit.

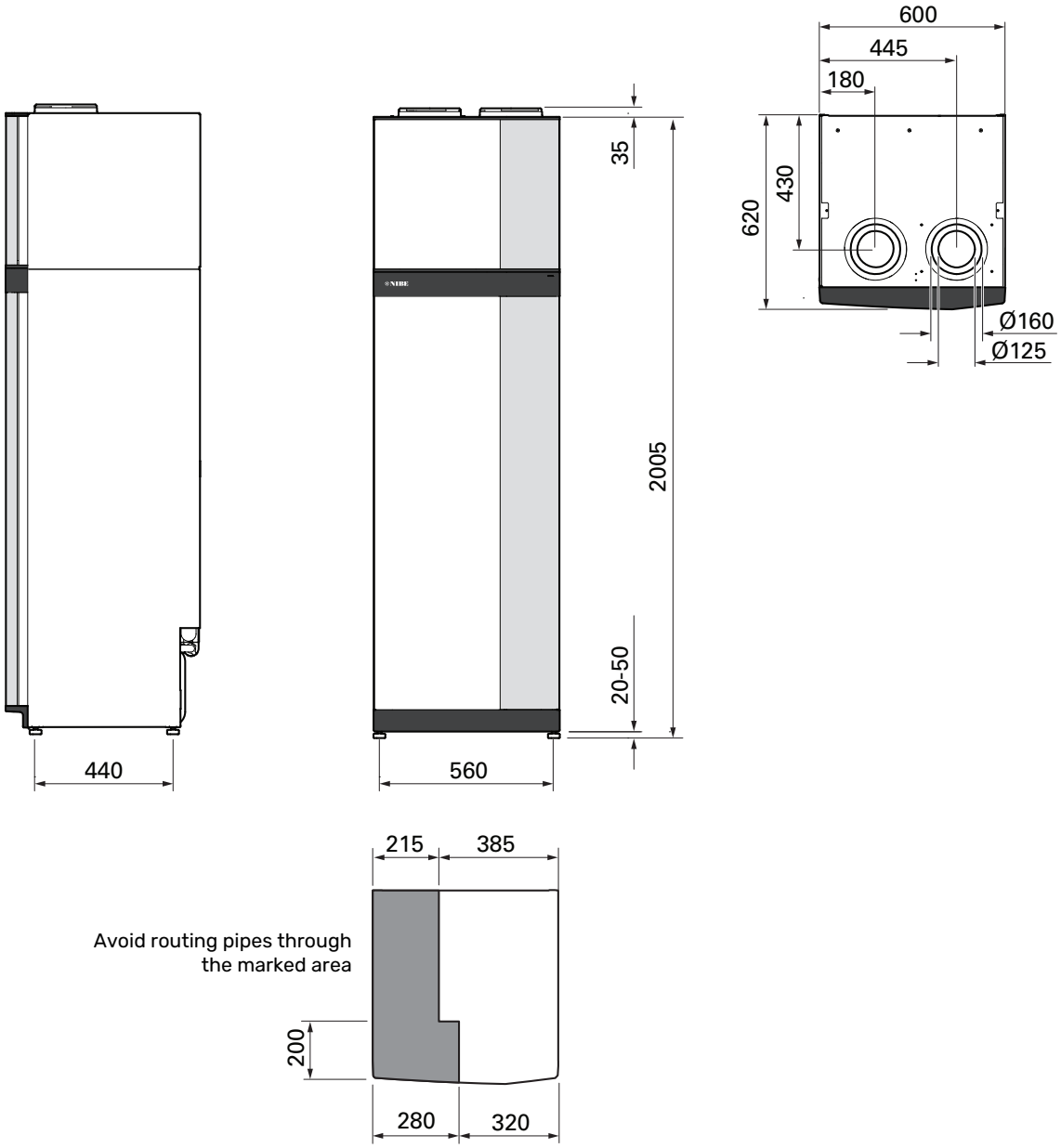

S735 at separated installation.

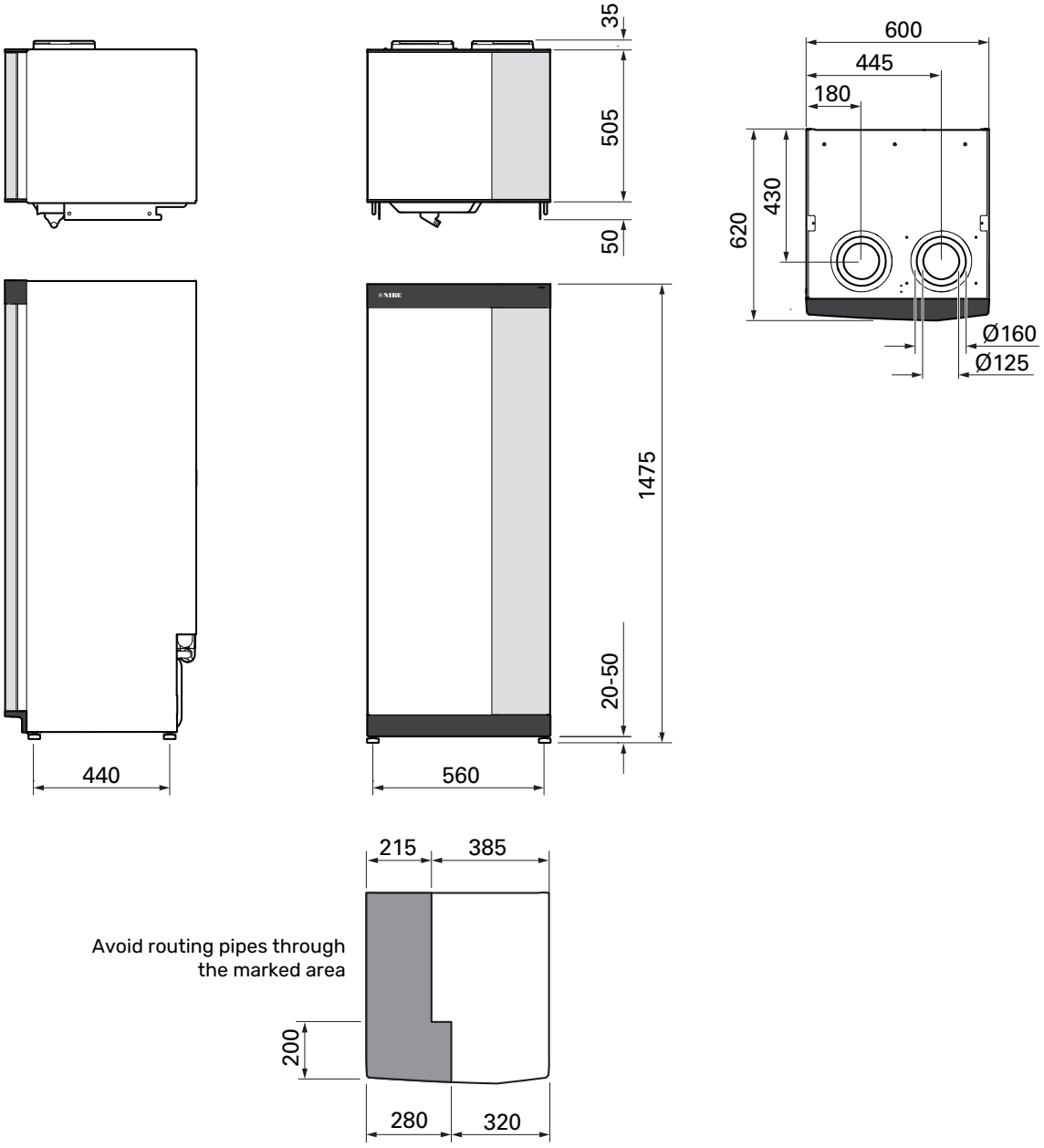

Technical specifications

3x400 V	kW	4	7
Output data according to EN 14 511			
Heating capacity (P_H)/COP	kW/-	1.00 / 3.49 [1]	1.16 / 3.90 [2]
Heating capacity (P_H)/COP	kW/-	1.38 / 4.76 [3]	1.57 / 5.19 [4]
Heating capacity (P_H)/COP	kW/-	4.21 / 3.25 [5]	5.37 / 2.55 [6]
SCOP according to EN 14 825			
Rated heating output ($P_{designh}$)	kW	4	6
SCOP cold climate, 35°C / 55 °C		5.02 / 3.70	4.75 / 3.81
SCOP average climate, 35 °C / 55 °C		4.75 / 3.70	4.50 / 3.67
SCOP warm climate, 35°C / 55°C		4.45 / 3.41	4.41 / 3.62
Additional power			
Max power, immersion heater (factory setting)	kW	9.0 (9.0)	
Energy rating, average climate			
The product's efficiency class room heating, average climate 35 / 55 °C [7]		A+++ / A++	A+++ / A++
The system's efficiency class room heating, average climate 35 / 55 °C [8]		A+++ / A++	A+++ / A++
Efficiency class hot water heating/Declared tap profile [9]		A / XL	A / XL
Electrical data			
Rated voltage	V	400 V 3N ~ 50 Hz	
Max operating current including 0.0 kW immersion heater (Recommended fuse rating).	A	11 (16)	14 (16)
Max operating current including 5.0 kW immersion heater (Recommended fuse rating).	A	15 (16)	15 (16)
Max operating current including 9.0 kW immersion heater (Recommended fuse rating).	A	20 (20)	22 (25)
Drive output heating medium pump	W	75	
Driving power exhaust air fan	W	170	
Enclosure class		IPX1B	
The product's connections meet the requirements of IEC 61000-3-3			
Equipment Compliant with IEC 61000-3-12			
WLAN			
2.412 - 2.484 GHz max power	dBm	17	
Wireless units			
2.405 - 2.480 GHz max power	dBm	4	
Refrigerant circuit			
Type of refrigerant		R290	
GWP refrigerant		0.02	
Filling amount	kg	0.3	0.42
CO_2 equivalent	kg	0,006	0.0084
Heating medium circuit			
Min pressure in the heating medium circuit	MPa (bar)	0.05 (0.5)	
Max pressure in the heating medium circuit	MPa (bar)	0.25 (2.5)	
Opening pressure, safety valve	MPa (bar)	0.25 (2.5)	
Min temperature	°C	10	
Max temperature [10]	°C	70	
Ventilation			
Min. airflow	l/s	17	25
Min. temperature (extract air)	°C	-20	
Max. temperature (exhaust air)	°C	35	
Filter type		Coarse 65%	
Sound			
Sound effect level according to EN 12 102 ($L_{W(A)}$) [11]	dB(A)	39-47	40-53
Sound pressure level in the installation room ($L_{P(A)}$) [12]	dB(A)	35-43	36-49
Pipe connections			
Heating medium ext ⌀	mm	22	
Hot water ext ⌀	mm	22	
Cold water ext ⌀	mm	22	
Ventilation ⌀	mm	125/160	
Water heater and heating section			
Volume coil	litre	7.8	
Volume, hot water heater	litre	178	
Min pressure in water heater	MPa (bar)	0.01 (0.1)	
Max pressure in hot water heater	MPa (bar)	1.0 (10)	
Opening pressure, safety valve	MPa (bar)	0.9 (9)	
Min temperature	°C	3	
Max temperature [10]	°C	70	

3x400 V	kW	4	7
Capacity, hot water heating according to EN 16147			
Tap volume 40°C (V_{max}) [13]	litre	223 - 264	
COP (COP_t)		2.80 [14]	2.76 [15]
Heat loss (P_{es})	W	56 [14]	69 [15]
Dimensions and weight			
Width	mm	600	
Depth	mm	620	
Height incl. feet	mm	2025	
Ceiling height	mm	2170	
Weight, complete product	kg	200	213
Weight heater unit	kg	123	126
Weight air treatment unit	kg	77	87
Corrosion protection		Stainless	
Part No.		066 128	066 134

1 A20(12)W35, exhaust air flow 17 l/s (61 m³/h) min. compressor frequency

2 A20(12)W35, exhaust air flow 25 l/s (90 m³/h) min. compressor frequency

3 A20(12)W35, exhaust air flow 40 l/s (144 m³/h) min. compressor frequency

4 A20(12)W35, exhaust air flow 70 l/s (252 m³/h) min. compressor frequency

5 A20(12)W35, exhaust air flow 70 l/s (252 m³/h) max. compressor frequency

6 A20(12)W45, exhaust air flow 70 l/s (252 m³/h) max. compressor frequency

7 Scale for the product's efficiency class room heating: A+++ to D.

8 Scale for the system's efficiency class room heating: A+++ to G. Reported efficiency for the system takes the product's temperature regulator into account.

9 Scale for efficiency class hot water: A+ to F.

10 Compressor and additional heat

11 The noise level varies with the selected fan curve. For more detailed sound data, including sound to channels, visit nibe.eu.

12 The noise level can vary with the room's damping capacity. These values apply with a damping of 4 dB.

13 The value varies depending on the choice of demand mode ("Small", "Medium" or "Large")

14 A20(12) exhaust air flow 48 l/s (174 m³/h). Hot water demand "Small"

15 A20(12) exhaust air flow 67 l/s (240 m³/h). Hot water demand "Small"

3x230 V	kW	4	7
Output data according to EN 14 511			
Heating capacity (P_H)/COP	kW/-	1.00 / 3.49 [1]	1.16 / 3.90 [2]
Heating capacity (P_H)/COP	kW/-	1.38 / 4.76 [3]	1.57 / 5.19 [4]
Heating capacity (P_H)/COP	kW/-	4.21 / 3.25 [5]	5.37 / 2.55 [6]
SCOP according to EN 14 825			
Rated heating output ($P_{designh}$)	kW	4	6
SCOP cold climate, 35°C / 55 °C		5.02 / 3.70	4.75 / 3.81
SCOP average climate, 35 °C / 55 °C		4.75 / 3.70	4.50 / 3.67
SCOP warm climate, 35°C / 55°C		4.45 / 3.41	4.41 / 3.62
Additional power			
Max power, immersion heater (factory setting)	kW	9.0 (9.0)	
Energy rating, average climate			
The product's efficiency class room heating, average climate 35 / 55 °C [7]		A+++ / A++	A+++ / A++
The system's efficiency class room heating, average climate 35 / 55 °C [8]		A+++ / A++	A+++ / A++
Efficiency class hot water heating/Declared tap profile [9]		A / XL	A / XL
Electrical data			
Rated voltage	V	230 V 3 ~ 50 Hz	
Max operating current including 0.0 kW immersion heater (Recommended fuse rating).	A	11 (16)	14 (16)
Max operating current including 5.0 kW immersion heater (Recommended fuse rating).	A	21 (25)	23 (25)
Max operating current including 9.0 kW immersion heater (Recommended fuse rating).	A	28 (32)	31 (32)
Drive output heating medium pump	W	75	
Driving power exhaust air fan	W	170	
Enclosure class		IPX1B	
The product's connections meet the requirements of IEC 61000-3-3			
Equipment Compliant with IEC 61000-3-12			
WLAN			
2.412 - 2.484 GHz max power	dBm	17	
Wireless units			
2.405 - 2.480 GHz max power	dBm	4	
Refrigerant circuit			
Type of refrigerant		R290	
GWP refrigerant		0.02	
Filling amount	kg	0.3	0.42
CO_2 equivalent	kg	0,006	0.0084
Heating medium circuit			
Min pressure in the heating medium circuit	MPa (bar)	0.05 (0.5)	
Max pressure in the heating medium circuit	MPa (bar)	0.25 (2.5)	
Opening pressure, safety valve	MPa (bar)	0.25 (2.5)	
Min temperature	°C	10	
Max temperature [10]	°C	70	
Ventilation			
Min. airflow	l/s	17	25
Min. temperature (extract air)	°C	-20	
Max. temperature (exhaust air)	°C	35	
Filter type		Coarse 65%	
Sound			
Sound effect level according to EN 12 102 ($L_{W(A)}$) [11]	dB(A)	39-47	40-53
Sound pressure level in the installation room ($L_{P(A)}$) [12]	dB(A)	35-43	36-49
Pipe connections			
Heating medium ext ⌀	mm	22	
Hot water ext ⌀	mm	22	
Cold water ext ⌀	mm	22	
Ventilation ⌀	mm	125/160	
Water heater and heating section			
Volume coil	litre	7.8	
Volume, hot water heater	litre	178	
Min pressure in water heater	MPa (bar)	0.01 (0.1)	
Max pressure in hot water heater	MPa (bar)	1.0 (10)	
Opening pressure, safety valve	MPa (bar)	0.9 (9)	
Min temperature	°C	3	
Max temperature [10]	°C	70	
Capacity, hot water heating according to EN 16147			
Tap volume 40°C (V_{max}) [13]	litre	223 - 264	

3x230 V	kW	4	7
COP (COP_t)		2.80[14]	2.76[15]
Heat loss (P_{es})	W	56[14]	69[15]
Dimensions and weight			
Width	mm	600	
Depth	mm	620	
Height incl. feet	mm	2025	
Ceiling height	mm	2170	
Weight, complete product	kg	200	213
Weight heater unit	kg	123	126
Weight air treatment unit	kg	77	87
Corrosion protection		Stainless	
Part No.		066 129	066 135

1 A20(12)W35, exhaust air flow 17 l/s (61 m^3/h) min. compressor frequency

2 A20(12)W35, exhaust air flow 25 l/s (90 m^3/h) min. compressor frequency

3 A20(12)W35, exhaust air flow 40 l/s (144 m^3/h) min. compressor frequency

4 A20(12)W35, exhaust air flow 70 l/s (252 m^3/h) min. compressor frequency

5 A20(12)W35, exhaust air flow 70 l/s (252 m^3/h) max. compressor frequency

6 A20(12)W45, exhaust air flow 70 l/s (252 m^3/h) max. compressor frequency

7 Scale for the product's efficiency class room heating: A+++ to D.

8 Scale for the system's efficiency class room heating: A+++ to G. Reported efficiency for the system takes the product's temperature regulator into account.

9 Scale for efficiency class hot water: A+ to F.

10 Compressor and additional heat

11 The noise level varies with the selected fan curve. For more detailed sound data, including sound to channels, visit nibe.eu.

12 The noise level can vary with the room's damping capacity. These values apply with a damping of 4 dB.

13 The value varies depending on the choice of demand mode ("Small", "Medium" or "Large")

14 A20(12) exhaust air flow 48 l/s (174 m^3/h). Hot water demand "Small"

15 A20(12) exhaust air flow 67 l/s (240 m^3/h). Hot water demand "Small"

Energy labelling

INFORMATION SHEET

Supplier		NIBE	
Model		**S735-4**	**S735-7**
Temperature application	°C	35 / 55	35 / 55
Declared load profile for water heating		XL	XL
Seasonal space heating energy efficiency class, average climate		A+++ / A++	A+++ / A++
Water heating energy efficiency class, average climate		A	A
Rated heat output ($P_{designh}$), average climate	kW	4 / 4	6 / 6
Annual energy consumption space heating, average climate	kWh	1523 / 1982	2571 / 3156
Annual energy consumption water heating, average climate	kWh	1430	1432
Seasonal space heating energy efficiency, average climate	%	187 / 143	177 / 144
Water heating energy efficiency, average climate	%	117	117
Sound power level L_{WA} indoors	dB	42	44
Rated heat output ($P_{designh}$), cold climate	kW	4 / 4	6 / 6
Rated heat output ($P_{designh}$), warm climate	kW	4 / 4	6 / 6
Annual energy consumption space heating, cold climate	kWh	1718 / 2332	2905 / 3622
Annual energy consumption water heating, cold climate	kWh	1430	1432
Annual energy consumption space heating, warm climate	kWh	1050 / 1370	1695 / 2070
Annual energy consumption water heating, warm climate	kWh	1430	1432
Seasonal space heating energy efficiency, cold climate	%	198 / 145	187 / 149
Water heating energy efficiency, cold climate	%	117	117
Seasonal space heating energy efficiency, warm climate	%	175 / 134	174 / 142
Water heating energy efficiency, warm climate	%	117	117
Sound power level L_{WA} outdoors	dB	-	-

DATA FOR ENERGY EFFICIENCY OF THE PACKAGE

Model		S735-4	S735-7
Temperature application	°C	35 / 55	35 / 55
Controller, class		VI	
Controller, contribution to efficiency	%	4	
Seasonal space heating energy efficiency of the package, average climate	%	191 / 147	181 / 148
Seasonal space heating energy efficiency class of the package, average climate		**A+++ / A++**	**A+++ / A++**
Seasonal space heating energy efficiency of the package, cold climate	%	202 / 149	191 / 153
Seasonal space heating energy efficiency of the package, warm climate	%	179 / 138	178 / 146

Reported efficiency for the system also takes the temperature regulator into account. If the system is supplemented with external additional heat or solar heating, the total efficiency of the system must be recalculated.

TECHNICAL DOCUMENTATION

Model		S735-4					
Type of heat pump		☐ Air-water ☒ Exhaust-water ☐ Brine-water ☐ Water-water					
Low-temperature heat pump		☐ Yes ☒ No					
Integrated immersion heater for additional heat		☒ Yes ☐ No					
Heat pump combination heater		☒ Yes ☐ No					
Climate		☒ Average ☐ Cold ☐ Warm					
Temperature application		☒ Medium (55°C) ☐ Low (35°C)					
Applied standards		EN14825, EN16147, EN12102					
Rated heat output	Prated	3.5	kW	*Seasonal space heating energy efficiency*	η_s	143	%
Declared capacity for space heating at part load and at outdoor temperature Tj				*Declared coefficient of performance for space heating at part load and at outdoor temperature Tj*			
Tj = -7 °C	Pdh	3.1	kW	Tj = -7 °C	COPd	2.56	-
Tj = +2 °C	Pdh	1.9	kW	Tj = +2 °C	COPd	3.78	-
Tj = +7 °C	Pdh	1.2	kW	Tj = +7 °C	COPd	4.70	-
Tj = +12 °C	Pdh	1.1	kW	Tj = +12 °C	COPd	5.58	-
Tj = biv	Pdh	3.5	kW	Tj = biv	COPd	2.23	-
Tj = TOL	Pdh	3.5	kW	Tj = TOL	COPd	2.23	-
Tj = -15 °C (if TOL < -20 °C)	Pdh		kW	Tj = -15 °C (if TOL < -20 °C)	COPd		-
Bivalent temperature	T_{biv}	-10	°C	Min. outdoor air temperature	TOL	-10	°C
Cycling interval capacity	Pcych		kW	Cycling interval efficiency	COPcyc		-
Degradation coefficient	Cdh	0.92	-	Max supply temperature	WTOL	65	°C
Power consumption in modes other than active mode				*Additional heat*			
Off mode	P_{OFF}	0.008	kW	Rated heat output	Psup	0.0	kW
Thermostat-off mode	P_{TO}	0.016	kW				
Standby mode	P_{SB}	0.018	kW	Type of energy input	Electric		
Crankcase heater mode	P_{CK}	0.014	kW				
Other items							
Capacity control	Variable			Rated airflow (air-water)		160	m³/h
Sound power level, indoors/outdoors	L_{WA}	42 / -	dB	Nominal heating medium flow		0.32	m³/h
Annual energy consumption	Q_{HE}	1,982	kWh	Brine flow brine-water or water-water heat pumps			m³/h
For heat pump combination heater							
Declared load profile for water heating	XL			*Water heating energy efficiency*	η_{wh}	117	%
Daily energy consumption	Q_{elec}	6.821	kWh	Daily fuel consumption	Q_{fuel}		kWh
Annual energy consumption	AEC	1,430	kWh	Annual fuel consumption	AFC		GJ
Contact information	*NIBE Energy Systems – Box 14 – Hannabadsvägen 5 – 285 21 Markaryd – Sweden*						

Model		S735-7					
Type of heat pump		☐ Air-water ☒ Exhaust-water ☐ Brine-water ☐ Water-water					
Low-temperature heat pump		☐ Yes ☒ No					
Integrated immersion heater for additional heat		☒ Yes ☐ No					
Heat pump combination heater		☒ Yes ☐ No					
Climate		☒ Average ☐ Cold ☐ Warm					
Temperature application		☒ Medium (55°C) ☐ Low (35°C)					
Applied standards		EN14825, EN16147, EN12102					
Rated heat output	Prated	5.6	kW	*Seasonal space heating energy efficiency*	η_s	144	%
Declared capacity for space heating at part load and at outdoor temperature Tj				*Declared coefficient of performance for space heating at part load and at outdoor temperature Tj*			
Tj = -7 °C	Pdh	4.9	kW	Tj = -7 °C	COPd	2.52	-
Tj = +2 °C	Pdh	3.0	kW	Tj = +2 °C	COPd	3.77	-
Tj = +7 °C	Pdh	2.0	kW	Tj = +7 °C	COPd	4.53	-
Tj = +12 °C	Pdh	1.5	kW	Tj = +12 °C	COPd	5.20	-
Tj = biv	Pdh	5.5	kW	Tj = biv	COPd	2.33	-
Tj = TOL	Pdh	5.5	kW	Tj = TOL	COPd	2.33	-
Tj = -15 °C (if TOL < -20 °C)	Pdh		kW	Tj = -15 °C (if TOL < -20 °C)	COPd		-
Bivalent temperature	T_{biv}	-10	°C	Min. outdoor air temperature	TOL	-10	°C
Cycling interval capacity	Pcych		kW	Cycling interval efficiency	COPcyc		-
Degradation coefficient	Cdh	0.87	-	Max supply temperature	WTOL	65	°C
Power consumption in modes other than active mode				*Additional heat*			
Off mode	P_{OFF}	0.008	kW	Rated heat output	Psup	0.0	kW
Thermostat-off mode	P_{TO}	0.038	kW				
Standby mode	P_{SB}	0.034	kW	Type of energy input	Electric		
Crankcase heater mode	P_{CK}	0.008	kW				
Other items							
Capacity control	Variable			Rated airflow (air-water)		239	m³/h
Sound power level, indoors/outdoors	L_{WA}	44 / -	dB	Nominal heating medium flow		0.47	m³/h
Annual energy consumption	Q_{HE}	3,156	kWh	Brine flow brine-water or water-water heat pumps			m³/h
For heat pump combination heater							
Declared load profile for water heating	XL			*Water heating energy efficiency*	η_{wh}	117	%
Daily energy consumption	Q_{elec}	7.075	kWh	Daily fuel consumption	Q_{fuel}		kWh
Annual energy consumption	AEC	1,432	kWh	Annual fuel consumption	AFC		GJ
Contact information	*NIBE Energy Systems – Box 14 – Hannabadsvägen 5 – 285 21 Markaryd – Sweden*						

Electrical circuit diagram

3X400 V

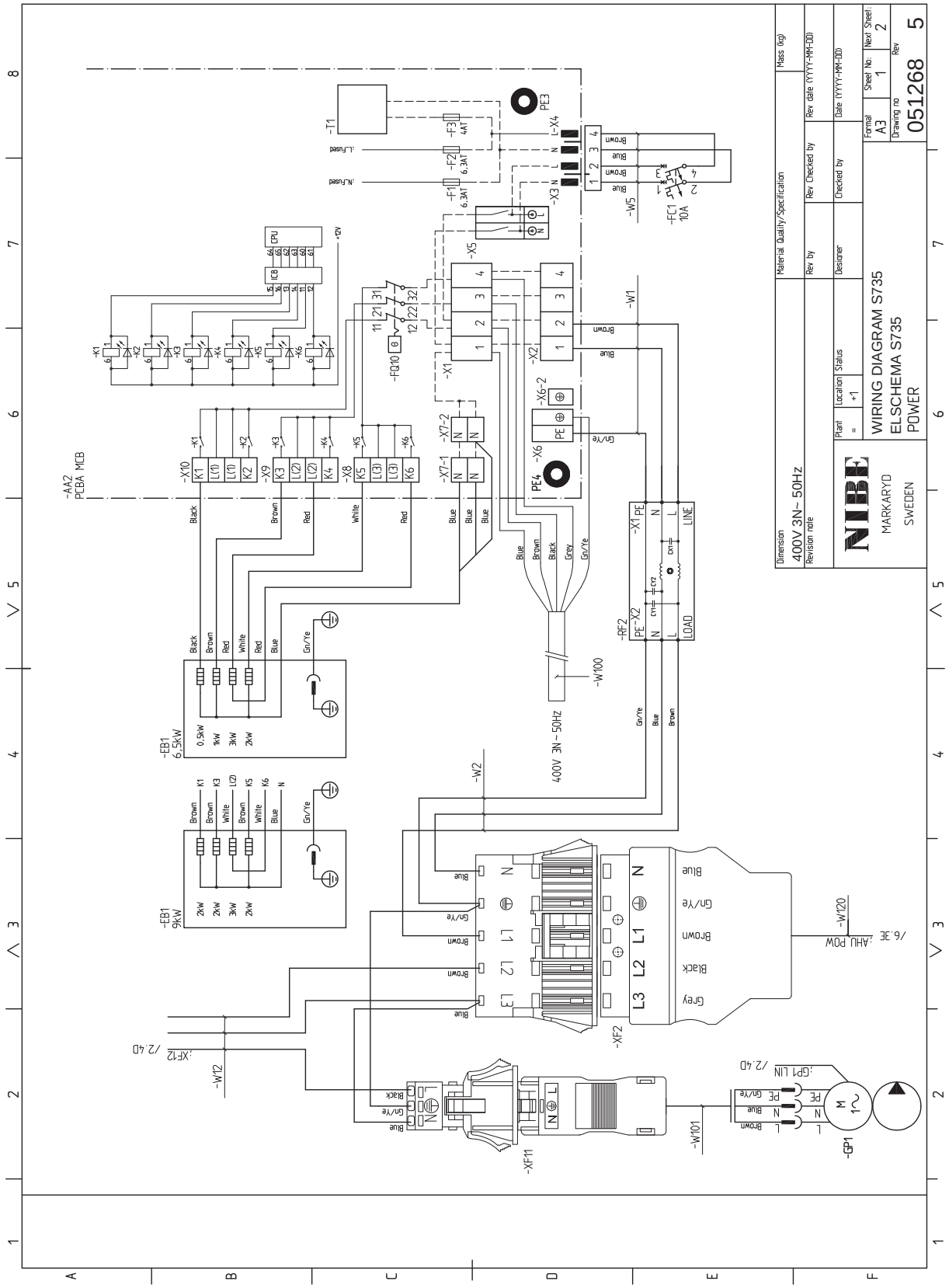

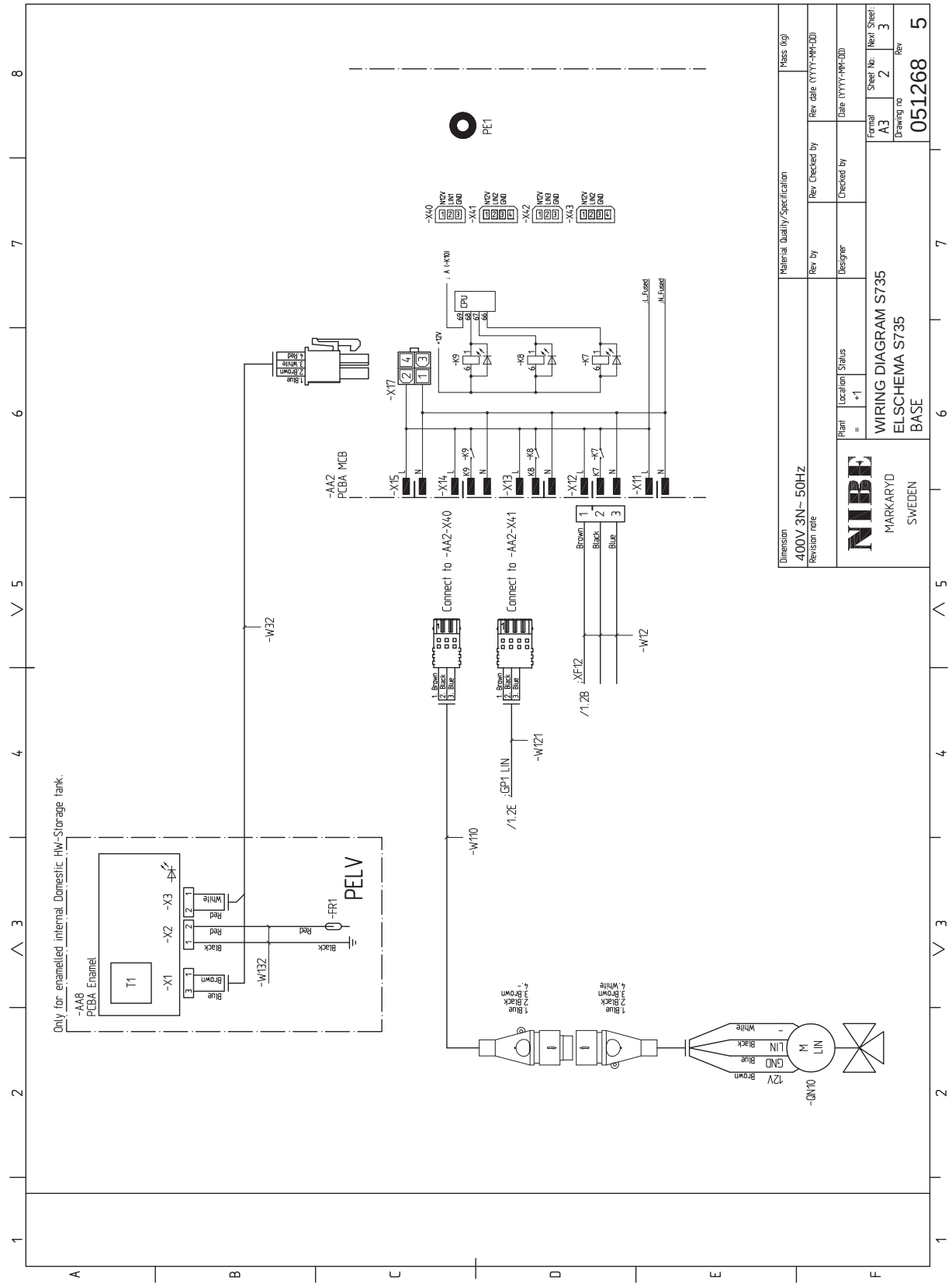
WIRING DIAGRAM S735
ELSCHEMA S735
BASE
NIBE
MARKARYD
SWEDEN
Dimension
400V 3N~ 50Hz
Revision note
Material Quality/Specification
Mass (kg)
Rev by
Rev Checked by
Rev date (YYYY-MM-DD)
Designer
Checked by
Date (YYYY-MM-DD)
Plant
Location
Status
Format
A3
Sheet No.
2
Next Sheet:
3
Drawing no
051268
Rev
5
Only for enamelled internal Domestic HW-Storage tank.
-AA8
PCBA Enamel
T1
-X1
-X2
-X3
-W132
-FR1
PELV
-W32
-W110
-W121
-W12
-AA2
PCBA MCB
-X15
-X14
-X13
-X12
-X11
-X17
-X40
-X41
-X42
-X43
-K9
-K8
-K7
CPU
PE1
Connect to -AA2-X40
Connect to -AA2-X41
-XF12
/1.2B
/1.2E
GP1 LIN
-QN10
12V
GND
LIN
M
LIN

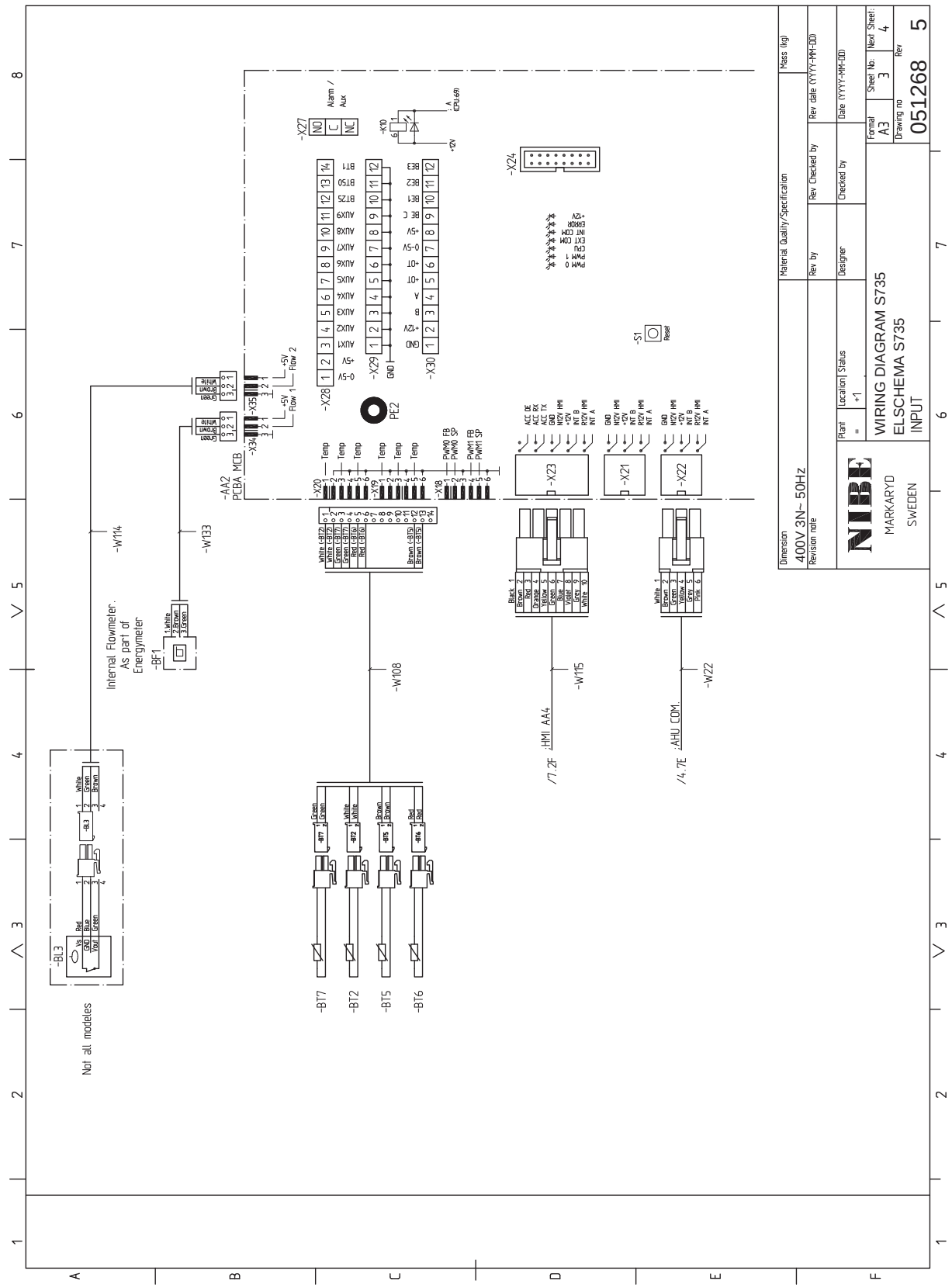
NIBE
MARKARYD
SWEDEN
WIRING DIAGRAM S735
ELSCHEMA S735
INPUT
051268 5
400V 3N~ 50Hz
-AA2 PCBA MCB
-BF1
Internal Flowmeter.
As part of
Energymeter
-W114
-W133
-W108
-W115
-W22
-BL3
Not all modeles
-B17
-B12
-B15
-B16
-X20
-X19
-X18
-X23
-X21
-X22
-X24
-X27
-X28
-X29
-X30
-X34
-X35
-S1
Reset
PE2
/7 2F HMI AA4
/4 7E AHU COM1

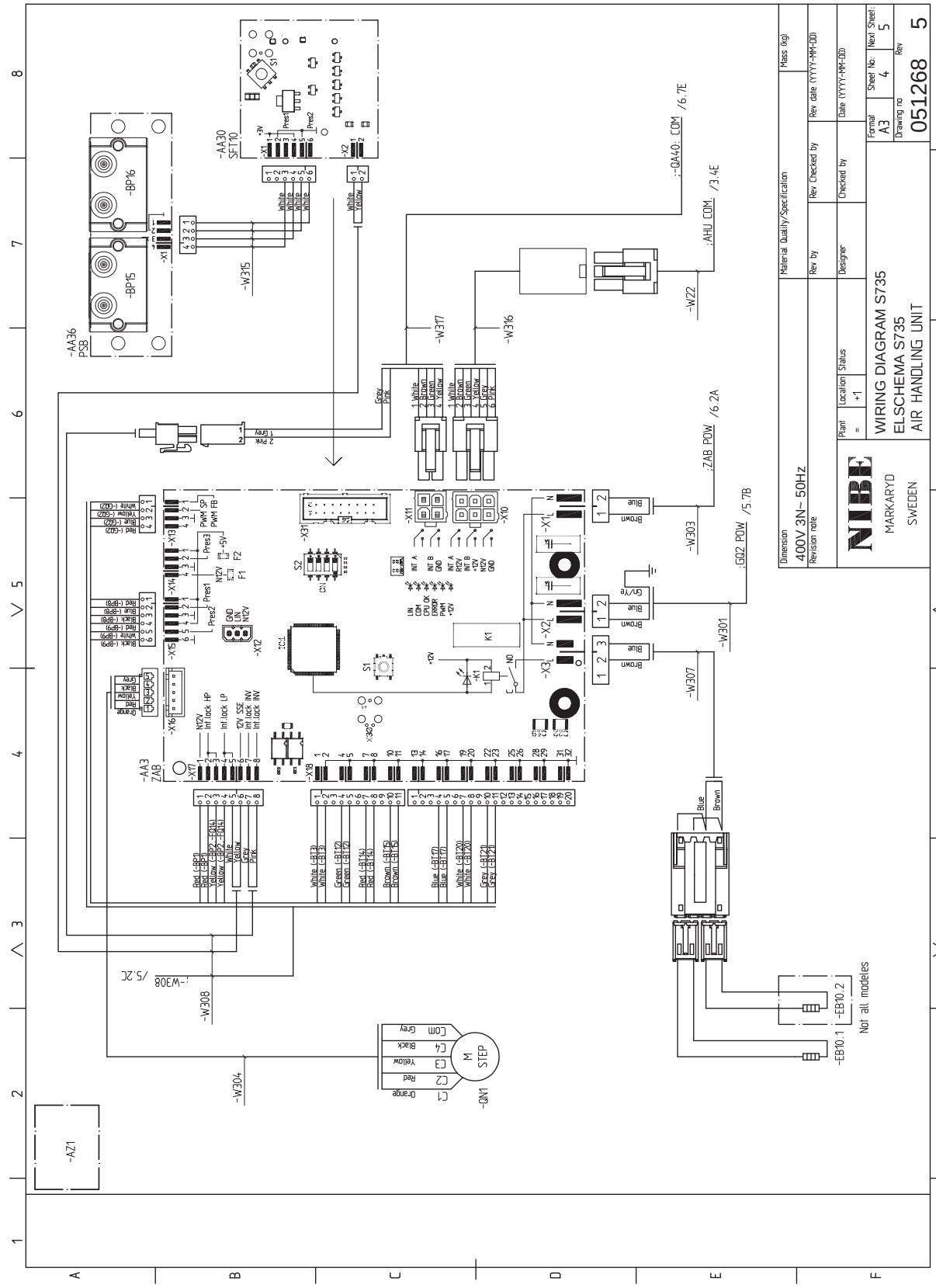
WIRING DIAGRAM S735
ELSCHEMA S735
AIR HANDLING UNIT
NIBE
MARKARYD
SWEDEN
Dimension
400V 3N~ 50Hz
Material Quality/Specification
Mass (kg)
Rev by
Rev Checked by
Rev date (YYYY-MM-DD)
Designer
Checked by
Date (YYYY-MM-DD)
Plant
Location
Status
Format
A3
Sheet No.
4
Next Sheet
5
Drawing no
051268
Rev
5
-AA36
PSB
-BP15
-BP16
-AA30
SFT10
-AA3
ZAB
-QN1
M
STEP
-EB10.1
-EB10.2
Not all modeles
-AZ1
-W315
-W317
-W316
-W22
-W303
-W301
-W307
-W308
-W304
-QA40: COM /6.7E
-AHU COM /3.4E
-ZAB POW /6.2A
-GQ2 POW /5.7B
-W308 /5.2C

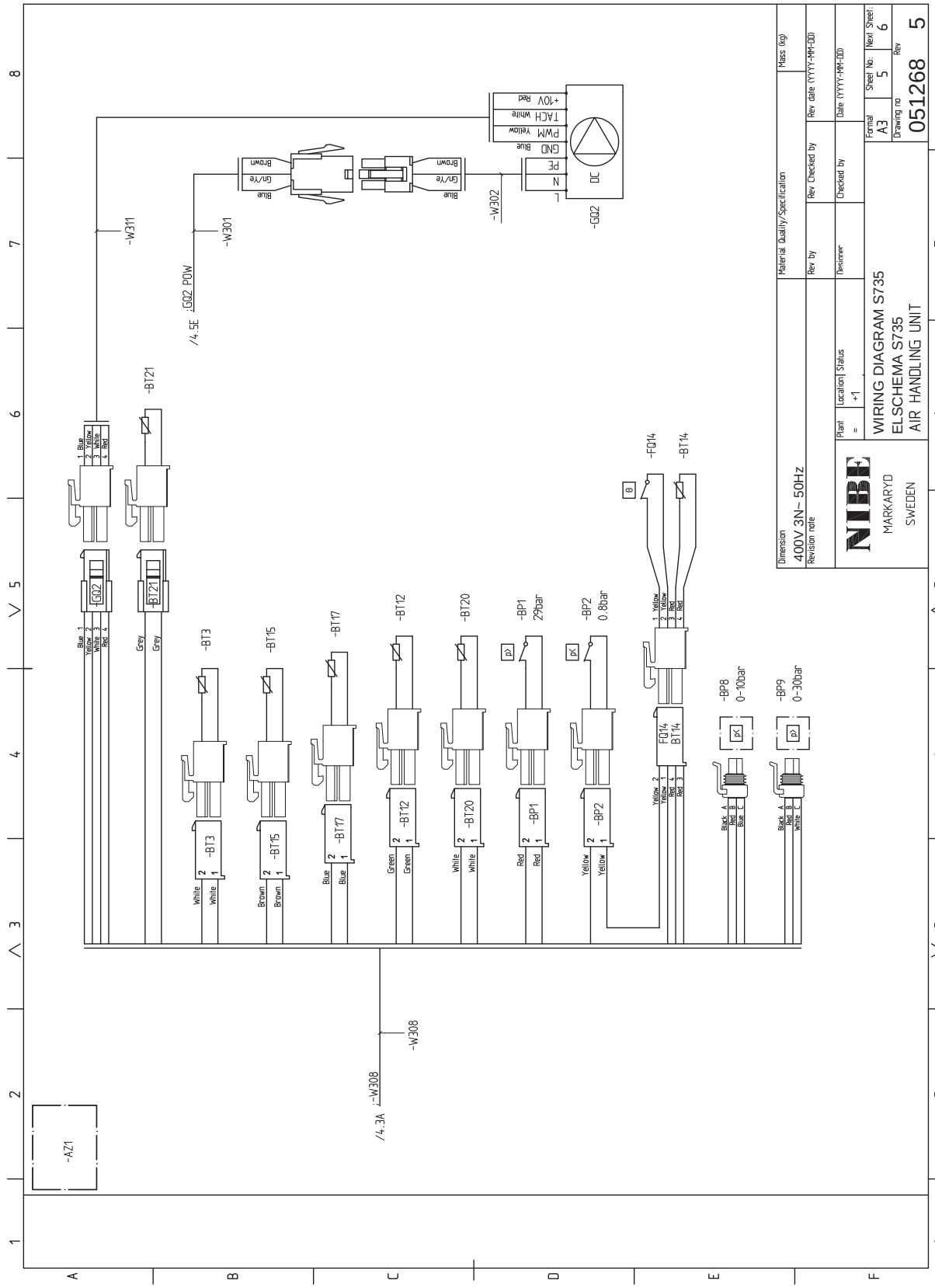
WIRING DIAGRAM S735
ELSCHEMA S735
AIR HANDLING UNIT
NIBE
MARKARYD
SWEDEN
400V 3N~ 50Hz
051268 5
-AZ1
-W311
-W301
-W302
-W308
-GQ2
-BT21
-BT3
-BT15
-BT17
-BT12
-BT20
-BP1 29bar
-BP2 0.8bar
-FQ14
-BT14
-BP8 0-10bar
-BP9 0-30bar
/4.5E -GQ2 POW
/4.3A -W308

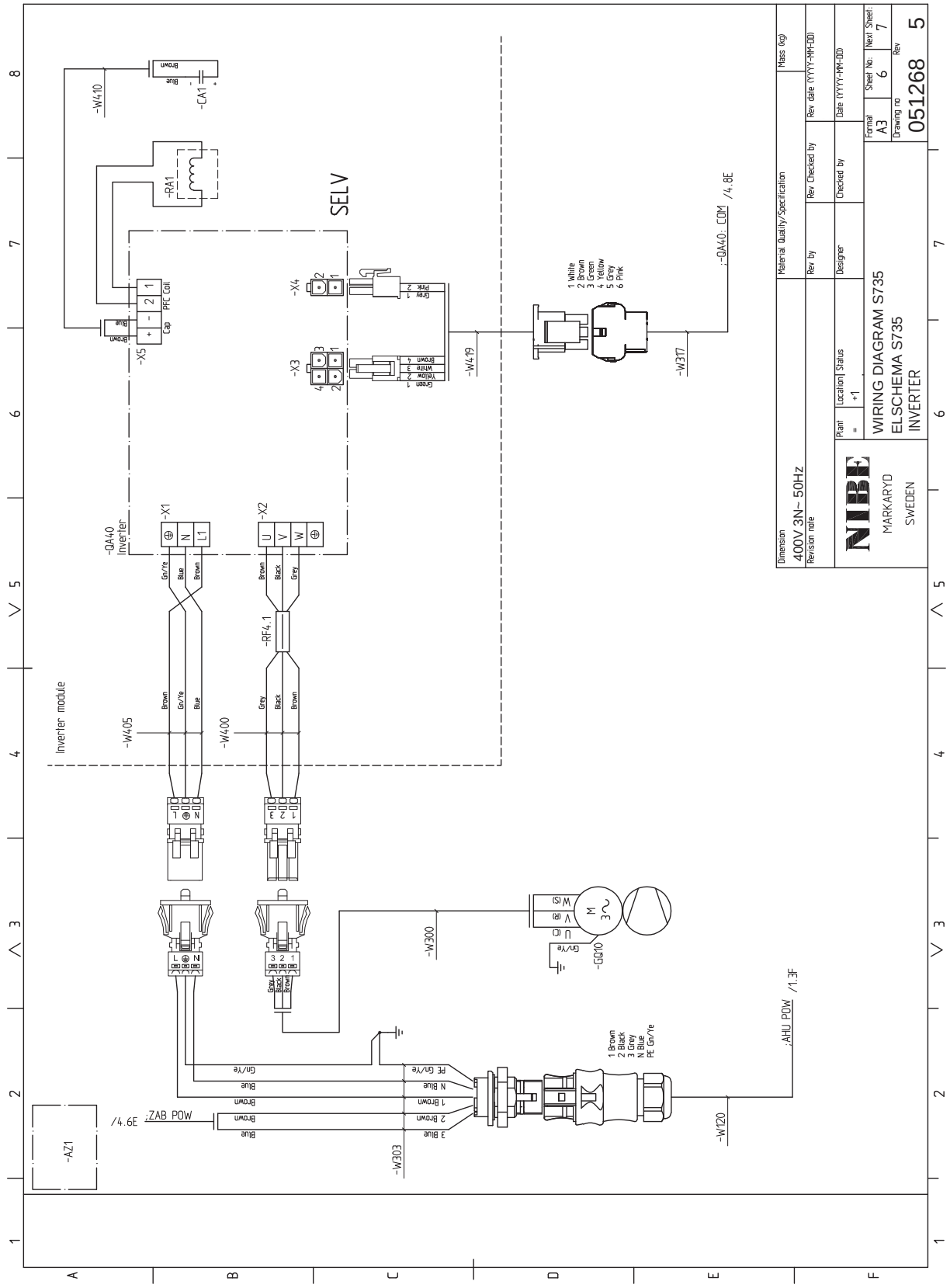
SELV
-W410
-CA1
-RA1
-X5
PFC Coil
Cap
-X4
-X3
-W419
-W317
-QA40: COM /4.8E
1 White
2 Brown
3 Green
4 Yellow
5 Grey
6 Pink
-QA40
Inverter
-X1
-X2
N
L1
U
V
W
-RF4.1
Inverter module
-W405
-W400
-W300
-GQ10
-W303
-W120
-AZ1
;ZAB POW /4.6E
;AHU POW /1.3F
1 Brown
2 Black
3 Grey
N Blue
PE Gn/Ye
Material Quality/Specification
Mass (kg)
Dimension
400V 3N~ 50Hz
Revision note
Rev by
Rev Checked by
Rev date (YYYY-MM-DD)
Designer
Checked by
Date (YYYY-MM-DD)
Plant
=
Location
+1
Status
NIBE
MARKARYD
SWEDEN
WIRING DIAGRAM S735
ELSCHEMA S735
INVERTER
Format
A3
Sheet No.
6
Next Sheet
7
Drawing no
051268
Rev
5

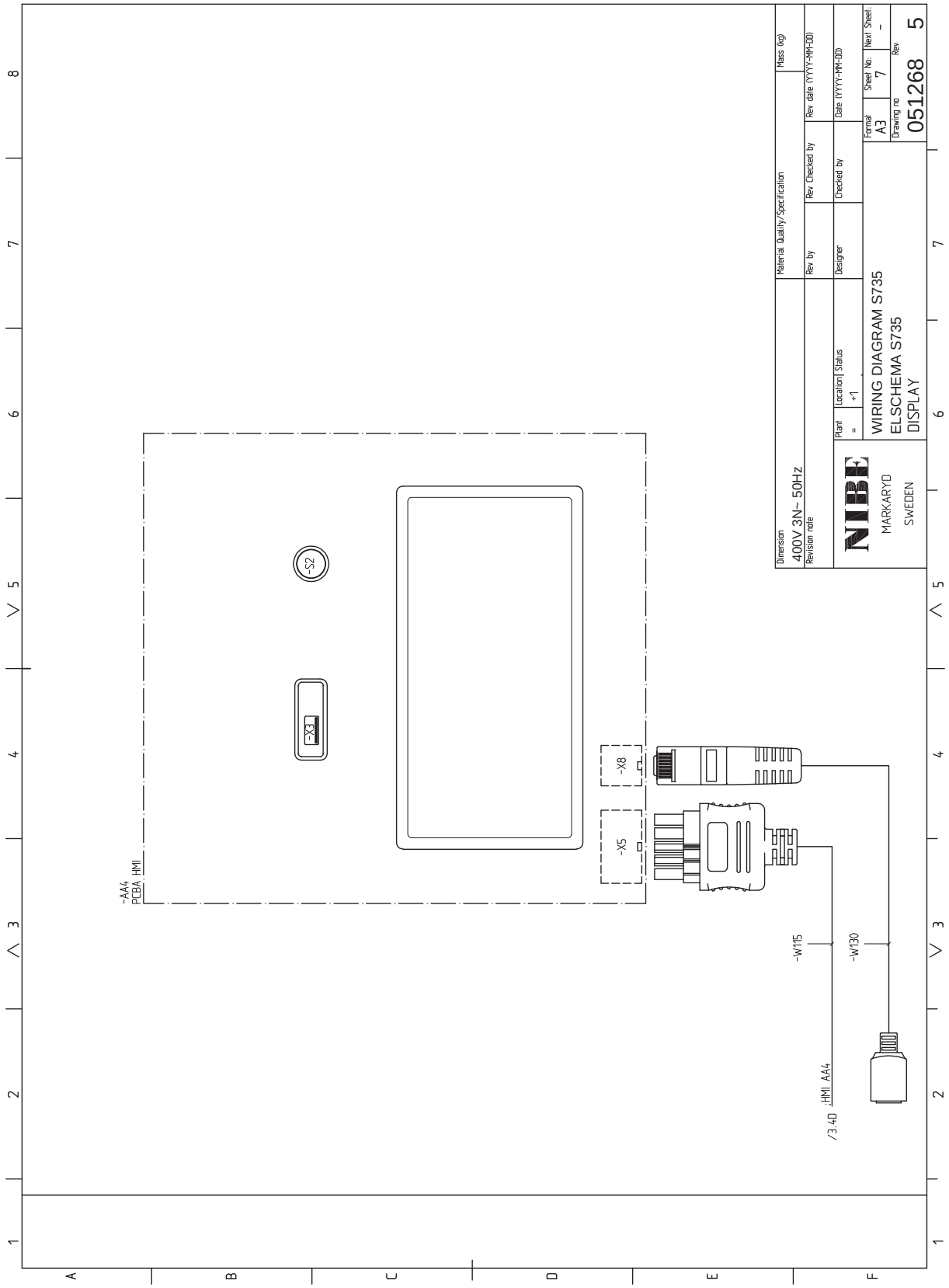
-AA4
PCBA, HMI
-S2
-X3
-X8
-X5
-W115
-W130
/3.40 :HMI AA4
Dimension
400V 3N~ 50Hz
Revision note
Material Quality/Specification
Rev by
Designer
Rev Checked by
Checked by
Mass (kg)
Rev date (YYYY-MM-DD)
Date (YYYY-MM-DD)
Plant
=
Location Status
+1
NIBE
MARKARYD
SWEDEN
WIRING DIAGRAM S735
ELSCHEMA S735
DISPLAY
Format
A3
Sheet No.
7
Next Sheet
-
Drawing no
051268
Rev
5

3X230 V

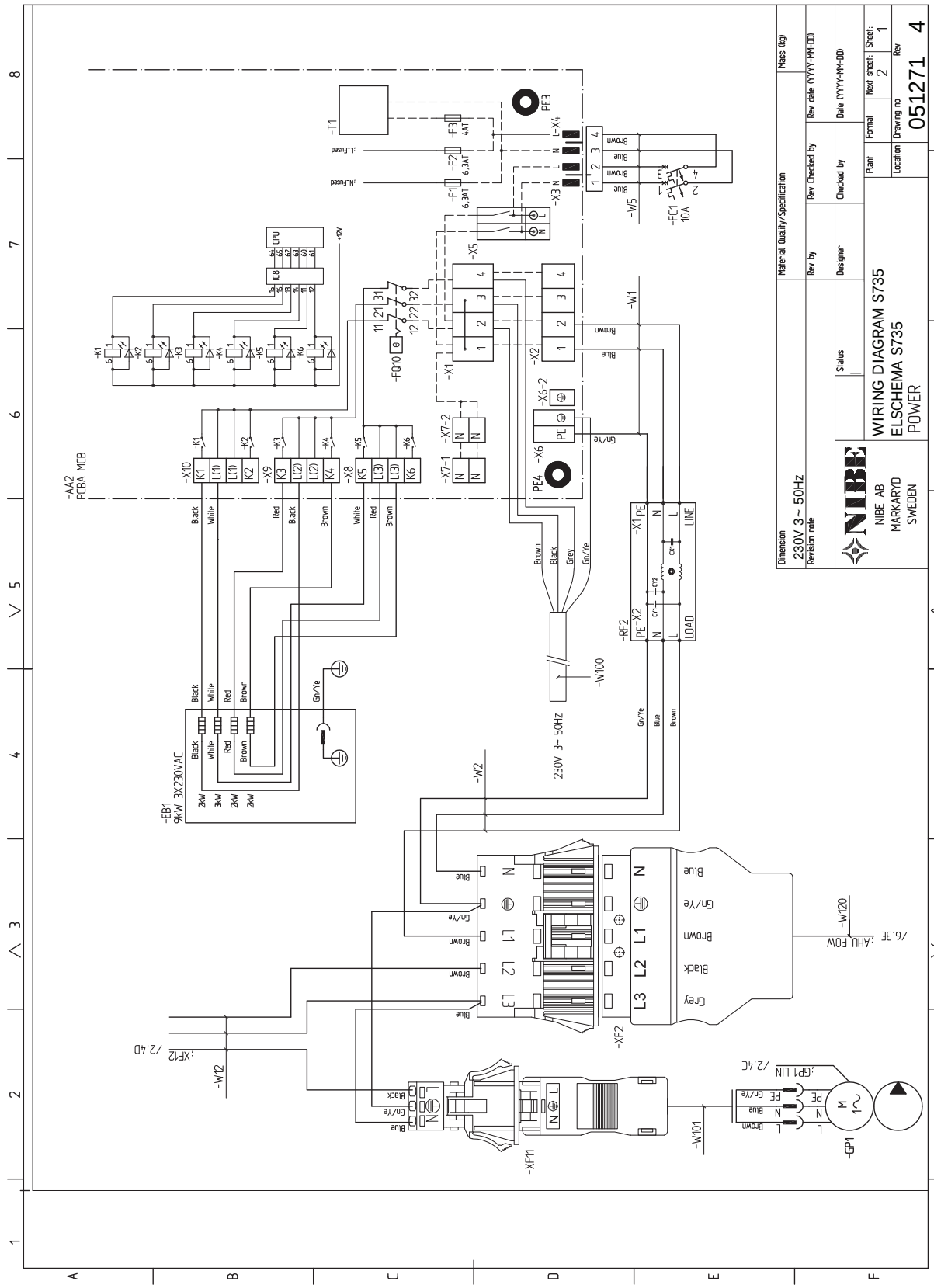

WIRING DIAGRAM S735
ELSCHEMA S735
POWER
NIBE AB
MARKARYD
SWEDEN
Dimension
230V 3~ 50Hz
Material Quality/Specification
Mass (kg)
Rev by
Rev Checked by
Rev date (YYYY-MM-DD)
Status
Designer
Checked by
Date (YYYY-MM-DD)
Plant
Format
Next sheet:
Sheet:
Location
Drawing no
Rev
051271 4
-AA2
PCBA MCB
-EB1
9kW 3X230VAC
230V 3~ 50Hz
-W100
-W120
-W101
-W12
-W2
-W1
-W5
-FC1
10A
-GP1
-XF11
-XF2
-RF2
-X1
-X2
-X3
-X4
-X5
-X6
-X6-2
-X7-1
-X7-2
-X8
-X9
-X10
-FQ10
-T1
-F1
-F2
-F3
PE3
PE4
LINE
LOAD

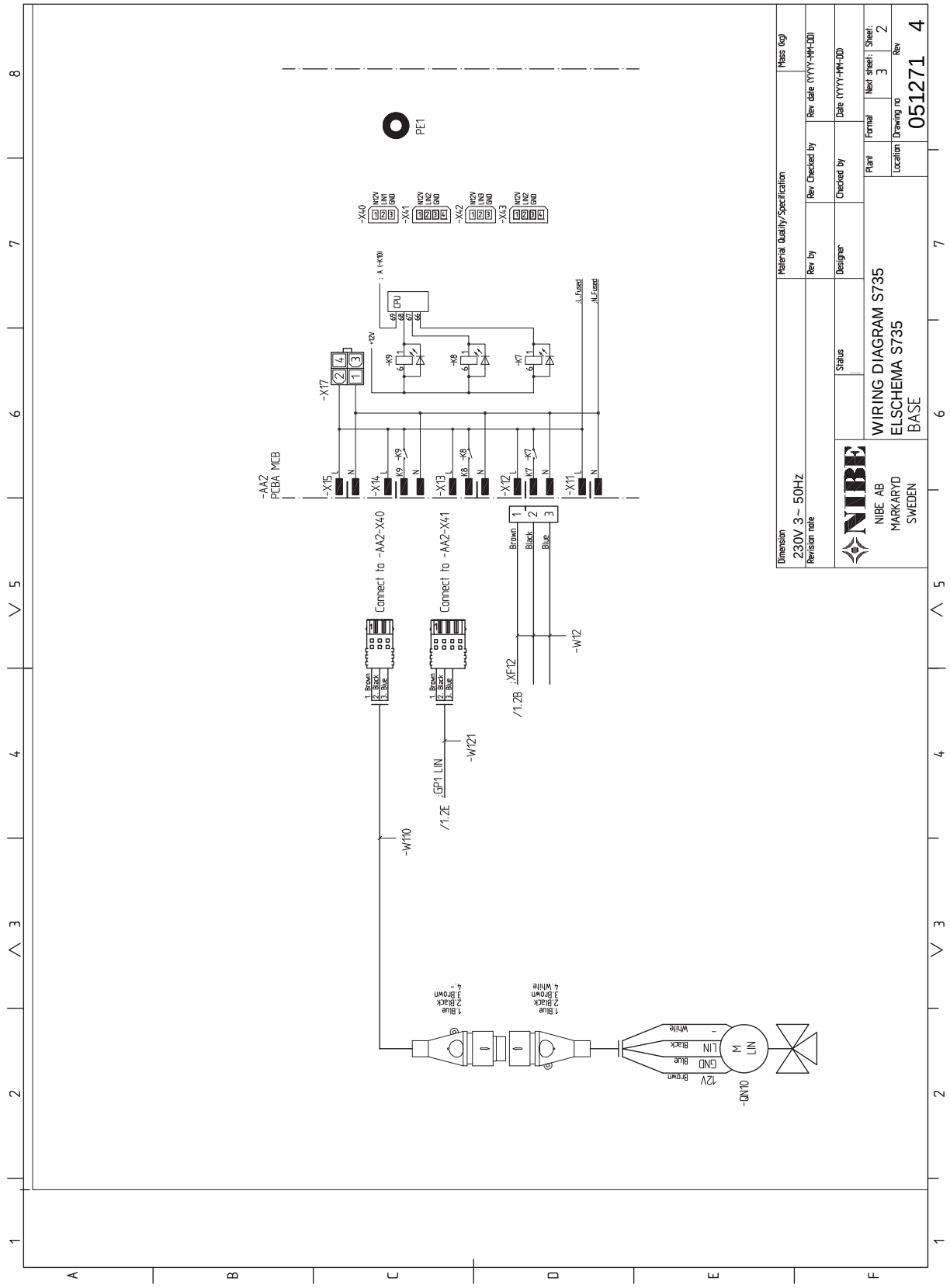
WIRING DIAGRAM S735
ELSCHEMA S735
BASE
NIBE AB
MARKARYD
SWEDEN
051271 4
-AA2
PCBA MCB
-X15
-X14
-X13
-X12
-X11
-X17
-K9
-K8
-K7
CPU
PE1
-X40
-X41
-X42
-X43
Connect to -AA2-X40
Connect to -AA2-X41
-W110
-W121
-W12
-XF12
-GP1 LIN
-QN10
12V
GND
LIN
Brown
Blue
Black
White
Material Quality/Specification
Mass (kg)
Dimension
230V 3~ 50Hz
Revision note
Rev by
Designer
Status
Rev Checked by
Checked by
Rev date (YYYY-MM-DD)
Date (YYYY-MM-DD)
Plant
Format
Next sheet:
3
Sheet:
2
Location
Drawing no
Rev

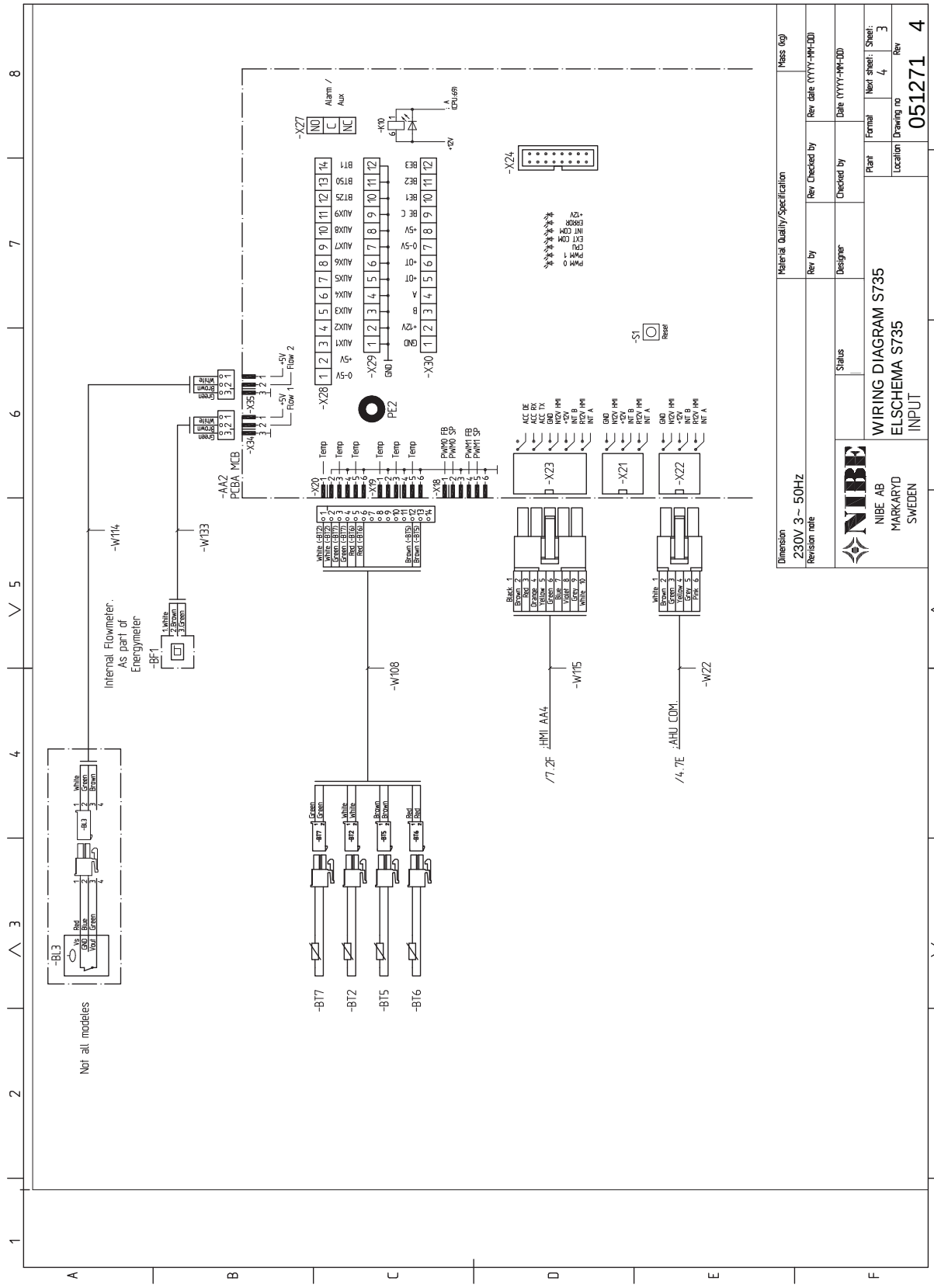
WIRING DIAGRAM S735
ELSCHEMA S735
INPUT
NIBE AB
MARKARYD
SWEDEN
Dimension
230V 3 ~ 50Hz
Revision note
Material Quality/Specification
Mass (kg)
Rev by
Rev Checked by
Rev date (YYYY-MM-DD)
Designer
Checked by
Date (YYYY-MM-DD)
Status
Plant
Format
Next sheet:
Sheet:
Location
Drawing no
051271 4
Rev
Not all modeles
Internal Flowmeter.
As part of
Energymeter
-BF1
-BL3
-W114
-W133
-W108
-W115
-W22
-AA2
PCBA MCB
-X20
-X19
-X18
-X23
-X21
-X22
-X24
-X27
-X28
-X29
-X30
-X34
-X35
-S1
Reset
PE2
-BT7
-BT2
-BT5
-BT6
HMI AA4
AHU COM.
Alarm /
Aux
Flow 1
Flow 2

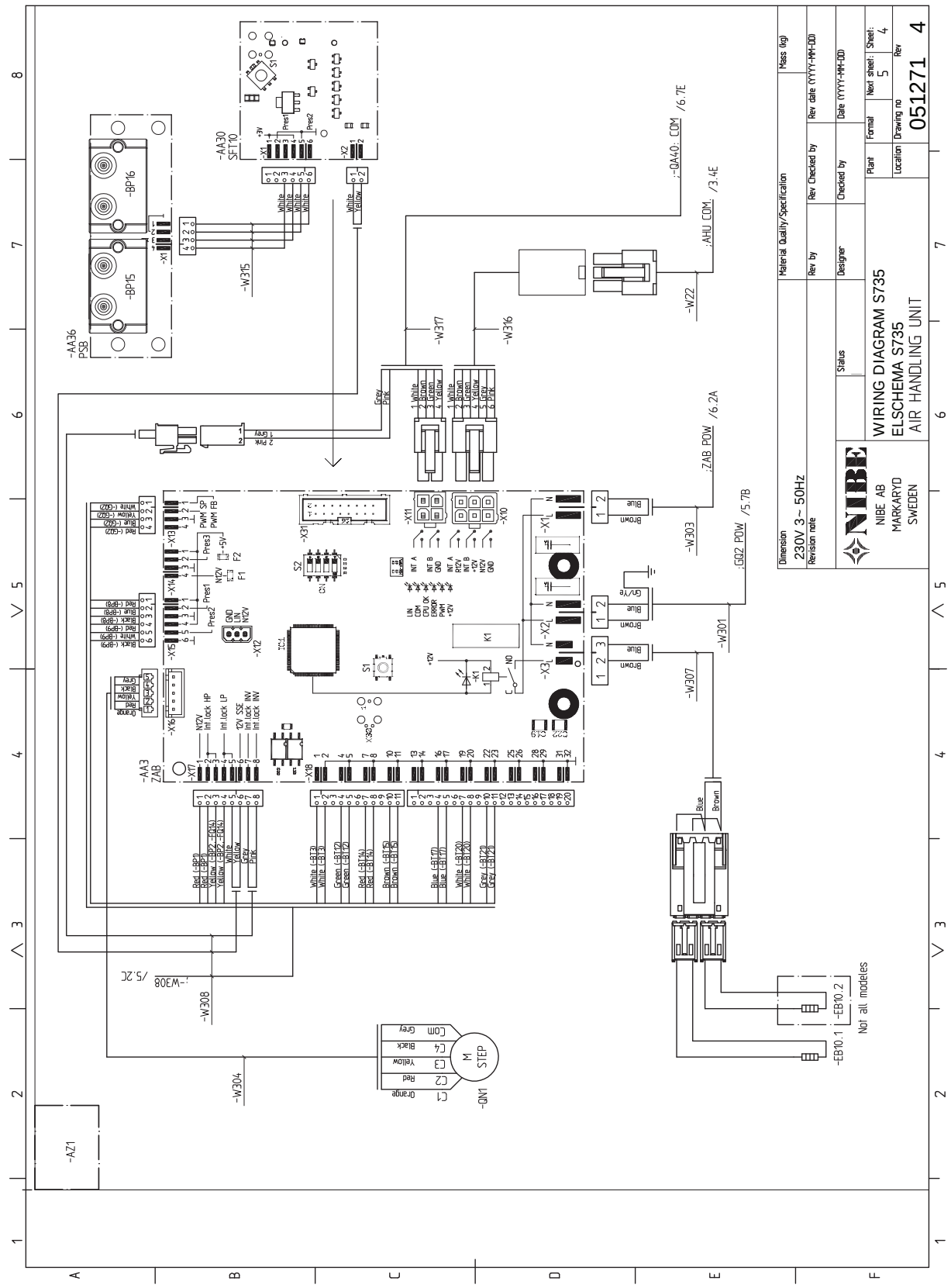
WIRING DIAGRAM S735
ELSCHEMA S735
AIR HANDLING UNIT
NIBE AB
MARKARYD
SWEDEN
Dimension
230V 3~ 50Hz
Material Quality/Specification
Mass (kg)
Rev by
Rev Checked by
Rev date (YYYY-MM-DD)
Designer
Checked by
Date (YYYY-MM-DD)
Status
Plant
Format
Next sheet:
Sheet:
Location
Drawing no
051271
Rev
4
-AA36
PSB
-BP15
-BP16
-AA30
SFT10
-AA3
ZAB
-QN1
M
STEP
-EB10.1
-EB10.2
Not all modeles
-AZ1
-W308
-W304
-W315
-W317
-W316
-W22
-W303
-W301
-W307
-QA40: COM /6.7E
-AHU COM /3.4E
-ZAB POW /6.2A
-GQ2 POW /5.7B
-W308 /5.2C

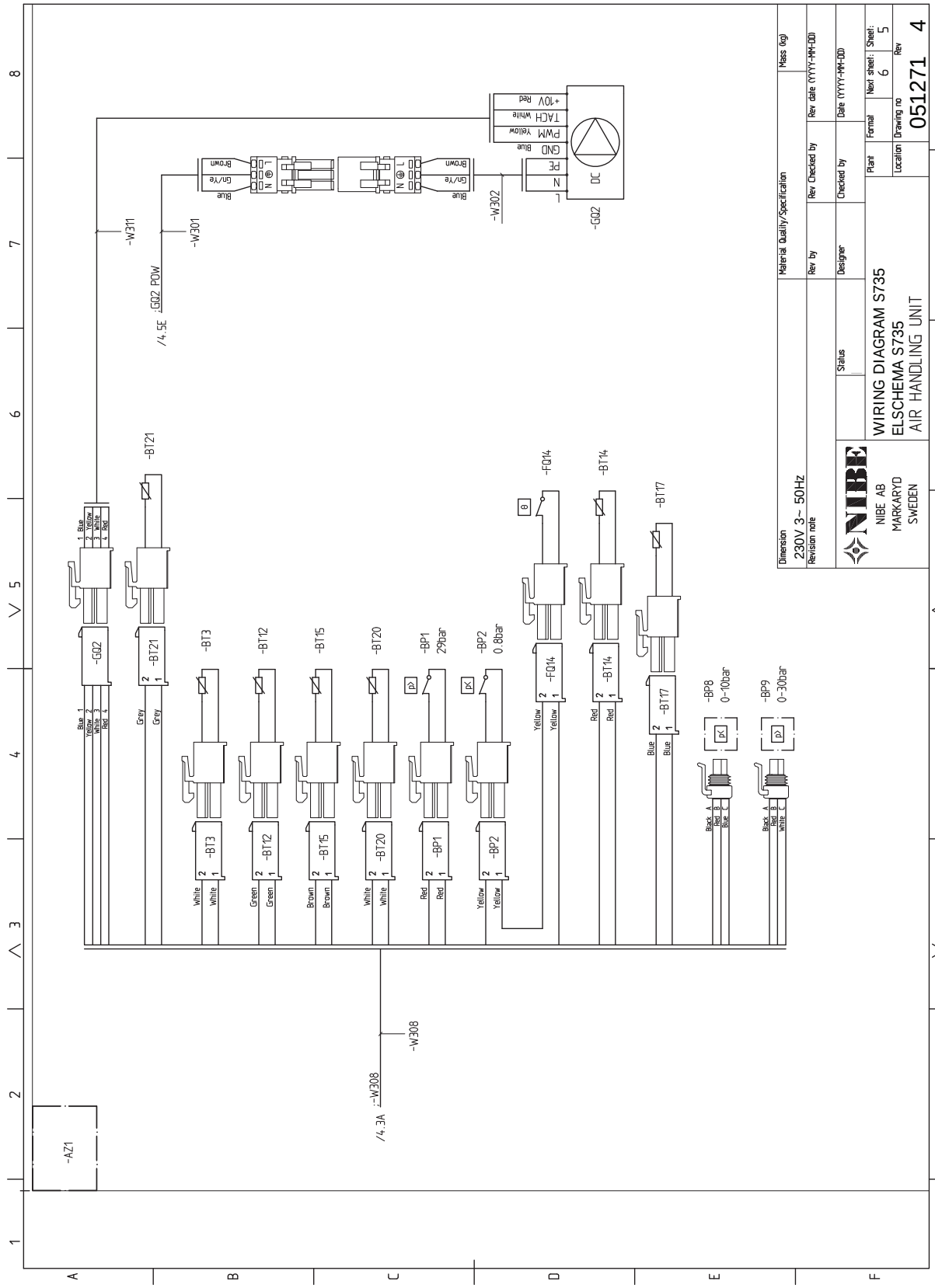
WIRING DIAGRAM S735
ELSCHEMA S735
AIR HANDLING UNIT
NIBE AB
MARKARYD
SWEDEN
Dimension
230V 3~ 50Hz
Revision note
Material Quality/Specification
Mass (kg)
Rev by
Rev Checked by
Rev date (YYYY-MM-DD)
Designer
Checked by
Date (YYYY-MM-DD)
Status
Plant
Format
Next sheet:
Sheet:
Location
Drawing no
051271
Rev
4
-GQ2
-BT21
-BT3
-BT12
-BT15
-BT20
-BP1
29bar
-BP2
0.8bar
-FQ14
-BT14
-BT17
-BP8
0-10bar
-BP9
0-30bar
-W311
-W301
-W302
-W308
/4.5E
/4.3A
-AZ1
DC
+10V
TACH
PWM
GND
PE
N
L
Blue
Yellow
White
Red
Brown
Gn/Ye
Green
Grey
Black
A
B
C
D
E
F
1
2
3
4
5
6
7
8

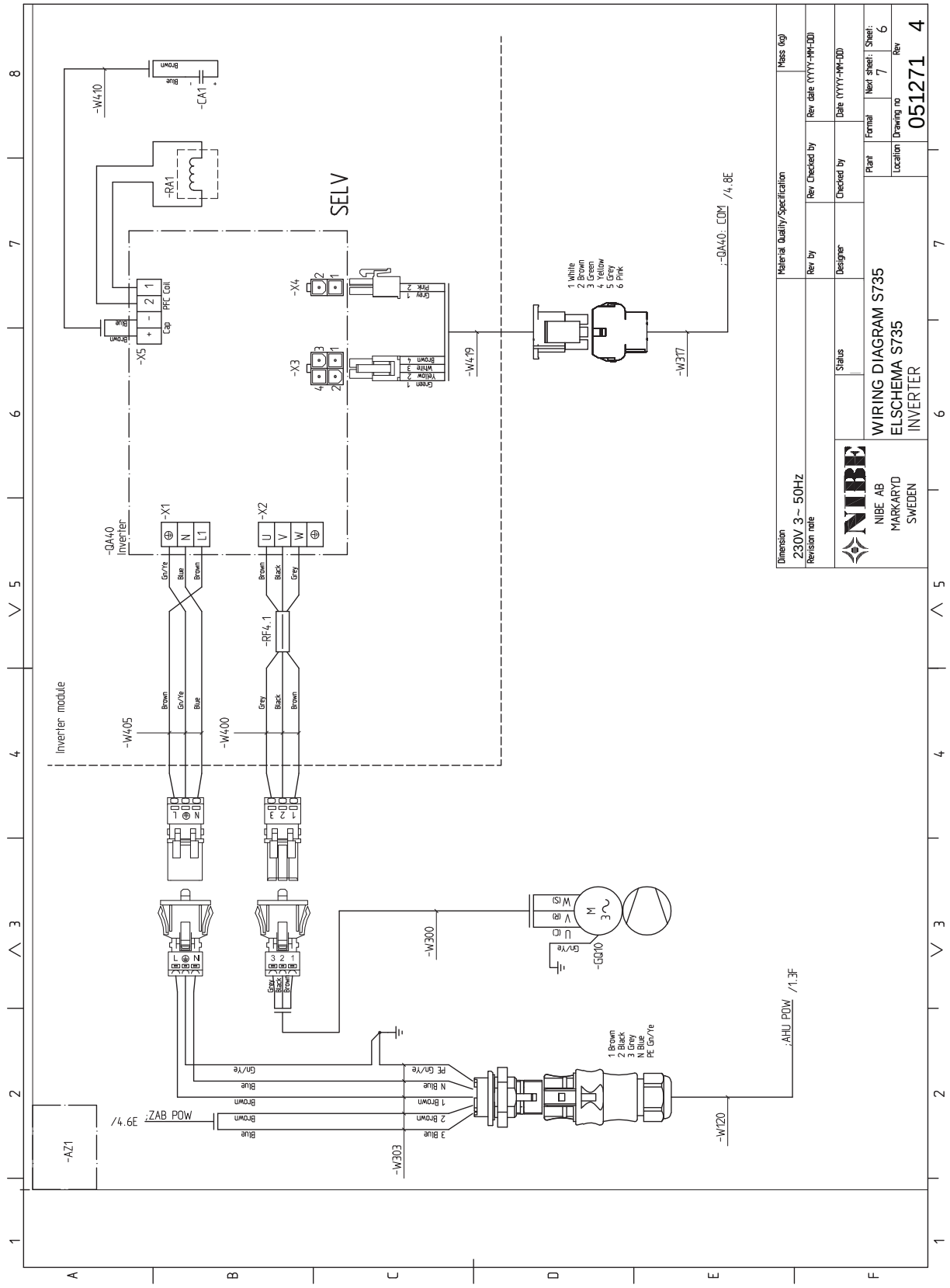
WIRING DIAGRAM S735
ELSCHEMA S735
INVERTER
NIBE AB
MARKARYD
SWEDEN
Dimension
230V 3~ 50Hz
Material Quality/Specification
Mass (kg)
Revision note
Rev by
Rev Checked by
Rev date (YYYY-MM-DD)
Status
Designer
Checked by
Date (YYYY-MM-DD)
Plant
Format
Next sheet:
Sheet:
Location
Drawing no
051271
Rev
4
SELV
Inverter module
-QA40
Inverter
-X1
-X2
-X3
-X4
-X5
-RA1
-CA1
-W410
-W405
-W400
-W419
-W317
-W300
-W303
-W120
-RF4.1
-GQ10
-AZ1
PFC Coil
Cap
1 White
2 Brown
3 Green
4 Yellow
5 Grey
6 Pink
1 Brown
2 Black
3 Grey
N Blue
PE Gn/Ye
PE Gn/Ye
N Blue
1 Brown
2 Brown
3 Blue
Gn/Ye
Blue
Brown
Black
Grey
Yellow
White
Green
Pink
/4.8E
;QA40: COM
/1.3F
;AHU POW
/4.6E
;ZAB POW

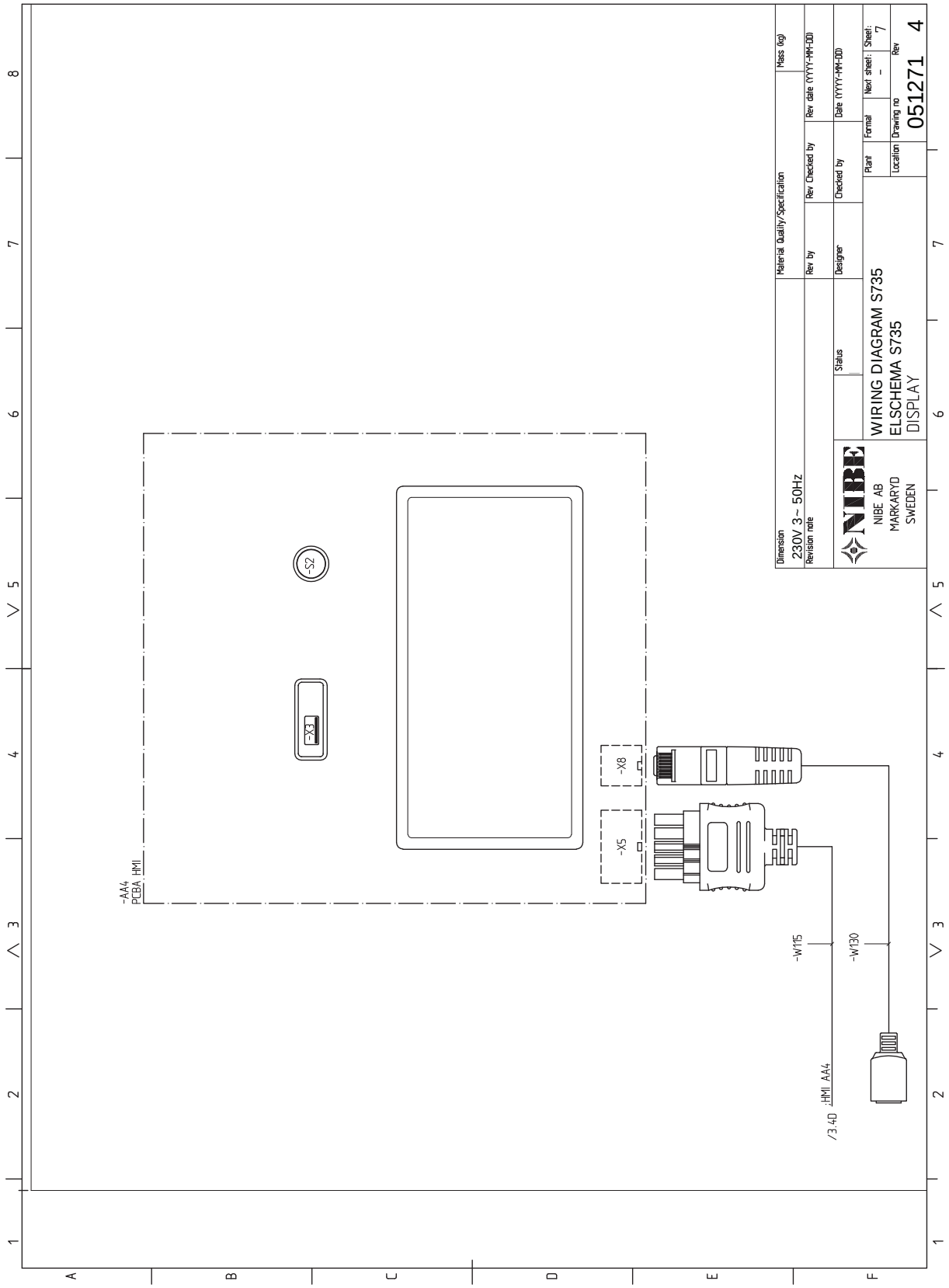
-AA4
PCBA, HMI
-S2
-X3
-X8
-X5
-W115
-W130
/3.40 :HMI AA4
Dimension
230V 3~ 50Hz
Revision note
Material Quality/Specification
Rev by
Designer
Rev Checked by
Checked by
Rev date (YYYY-MM-DD)
Date (YYYY-MM-DD)
Mass (kg)
Status
Plant
Format
Next sheet:
Sheet:
7
Location
Drawing no
051271
Rev
4
NIBE AB
MARKARYD
SWEDEN
WIRING DIAGRAM S735
ELSCHEMA S735
DISPLAY

Item register

A

Accessories, 64
Alarm, 61
Assembly, 6

C

Checking the magnetite indicator, 58
Climate system, 15
Climate systems and zones, 36
  Control - Introduction, 36
Cold and hot water
  Connecting cold and hot water, 15
Commissioning and adjusting, 28
  Filling and venting, 28
  Start-up and inspection, 29
Connecting accessories, 24
Connecting cold and hot water, 15
Connecting current sensors, 23
Connecting external operating voltage for the control system, 21
Connecting hot water circulation, 16
Connecting sensors, 22
Connecting the climate system, 15
Connections, 21
Control, 33
  Control - Introduction, 33
Control - Introduction, 33
Control - Menus
  Menu 1 - Indoor climate, 37
  Menu 2 - Hot water, 41
  Menu 3 - Info, 43
  Menu 4 - My system, 44
  Menu 5 - Connection, 47
  Menu 6 - Scheduling, 48
  Menu 7 - Installer settings, 50

D

Delivery and handling, 6
  Assembly, 6
  Installation area, 6
  Removing parts of the insulation, 9
  Removing the covers, 7
  Supplied components, 7
  Transport, 6
Dimensions and pipe connections, 14
Dimensions and setting-out coordinates, 66
Disruption to comfort
  Info menu, 61
Disturbances in comfort, 61
  Alarm, 61
  Manage alarm, 61
  Troubleshooting, 61
Docking alternatives
  Two or more climate systems, 15
Draining the climate system, 57
Draining the hot water heater, 57

E

Electrical addition - maximum output, 27
  Power steps of the immersion heater, 27
Electrical circuit diagram, 75
Electrical connections, 19
  Connecting accessories, 24
  Connecting external operating voltage for the control system, 21
  Connecting sensors, 22
  Connections, 21
  Electrical addition - maximum output, 27
  External connection options, 25
  External connections, 22
  External energy meter, 23
  Load monitor, 23
  Outdoor sensor, 22
  Power connection, 21
  Room sensor, 22
  Settings, 27
  Tariff control, 21
Energy labelling, 72
  Data for energy efficiency of the package, 72
  Information sheet, 72
  Technical documentation, 73
Exhaust air duct, 18
External connection options, 25
  Possible selection for AUX inputs, 25
External connections, 22
External energy meter, 23

F

Filling and venting, 28
  Filling the climate system, 28
  Filling the hot water heater, 28
  Venting the climate system, 28
Filling the climate system, 28
Filling the hot water heater, 28

H

Help menu, 34

I

Important information, 4
Info menu, 61
Inspection of the installation, 5
Installation alternative
  Connecting hot water circulation, 16
  Water heater with immersion heater, 16
  Water heater without immersion heater, 15
Installation area, 6

M

Manage alarm, 61
Marking, 4
Menu 1 - Indoor climate, 37
Menu 2 - Hot water, 41
Menu 3 - Info, 43
Menu 4 - My system, 44
Menu 5 - Connection, 47
Menu 6 - Scheduling, 48
Menu 7 - Installer settings, 50
Modbus TCP/IP, 59

N

Navigation
  Help menu, 34

O

Outdoor sensor, 22

P

Pipe and ventilation connections, 13
  Climate system, 15
  Cold and hot water
    Connecting cold and hot water, 15

Connecting the climate system, 15
Dimensions and pipe connections, 14
Exhaust air duct, 18
Maximum boiler and radiator volumes, 13
Pipe dimensions, 14
Setting out dimensions, 14
Symbol key, 15
Pipe dimensions, 14
Possible selection for AUX inputs, 25
Power connection, 21

R

Removing the covers, 7
Room sensor, 22

S

Safety information
Inspection of the installation, 5
Marking, 4
Serial number, 4
Symbols, 4
Serial number, 4
Service, 57
Service actions
Draining the climate system, 57
Draining the hot water heater, 57
Modbus TCP/IP, 59
Temperature sensor data, 58
USB service outlet, 58
Service measures
Checking the magnetite indicator, 58
Setting out dimensions, 14
Settings, 27
Emergency mode, 27
Standby mode, 27
Start-up and inspection, 29–30
Setting the pump speed, 30
Setting the ventilation, 30
Supplied components, 7
Symbol key, 15
Symbols, 4

T

Tariff control, 21
Technical data, 66
Dimensions and setting-out coordinates, 66
Electrical circuit diagram, 75
Technical Data, 68
Technical Data, 68
Temperature sensor data, 58
The heat pump design, 10
Transport, 6
Troubleshooting, 61

U

USB service outlet, 58

V

Venting the climate system, 28

Contact information

AUSTRIA
NIBE GmbH
Gahberggasse 11
4861 Schörfling am Attersee
Tel: +43 (0)7662 8963-0
kontakt@nibe.at
nibe.at

CZECH REPUBLIC
Družstevní závody Dražice - strojírna s.r.o.
Dražice 69, 29471 Benátky n. Jiz.
Tel: +420 326 373 801
nibe@nibe.cz
nibe.cz

DENMARK
Vølund Varmeteknik A/S
Industrivej Nord 7B, 7400 Herning
Tel: +45 97 17 20 33
info@volundvt.dk
volundvt.dk

FINLAND
NIBE Energy Systems Oy
Juurakkotie 3, 01510 Vantaa
Tel: +358 (0)9 274 6970
info@nibe.fi
nibe.fi

FRANCE
NIBE Energy Systems France SAS
Zone industrielle RD 28
Rue du Pou du Ciel, 01600 Reyrieux
Tél: 04 74 00 92 92
info@nibe.fr
nibe.fr

GERMANY
NIBE Systemtechnik GmbH
Am Reiherpfahl 3, 29223 Celle
Tel: +49 (0)5141 75 46 -0
info@nibe.de
nibe.de

GREAT BRITAIN
NIBE Energy Systems Ltd
3C Broom Business Park,
Bridge Way, S41 9QG Chesterfield
Tel: +44 (0)330 311 2201
info@nibe.co.uk
nibe.co.uk

NETHERLANDS
NIBE Energietechniek B.V.
Bagven Park 11, 4838 EH Breda
Tel: +31 (0)168 47 77 22
info@nibenl.nl
nibenl.nl

NORWAY
ABK-Qviller AS
Brynsengfaret 6, 0667 Oslo
Tel: (+47) 23 17 05 20
post@abkqviller.no
nibe.no

POLAND
NIBE-BIAWAR Sp. z o.o.
Ul. Prof. Andrzeja Kalicinskiego 1
15-569 Bialystok
Tel: +48 (0)85 66 28 490
biawar.com.pl

SWEDEN
NIBE Energy Systems
Box 14
Hannabadsvägen 5, 285 21 Markaryd
Tel: +46 (0)433-27 30 00
info@nibe.se
nibe.se

SWITZERLAND
NIBE Wärmetechnik c/o ait Schweiz AG
Industriepark, CH-6246 Altishofen
Tel. +41 (0)58 252 21 00
info@nibe.ch
nibe.ch

For countries not mentioned in this list, contact NIBE Sweden or check nibe.eu for more information.

NIBE Energy Systems
Hannabadsvägen 5
Box 14
SE-285 21 Markaryd
info@nibe.se
nibe.eu

IHB EN 2647-4 M13212

This is a publication from NIBE Energy Systems. All product illustrations, facts and data are based on the available information at the time of the publication's approval.

NIBE Energy Systems accepts no liability for any factual or printing errors.

©2026 NIBE ENERGY SYSTEMS

M13212