User and Installer Manual

# Heat pump water heater
# NIBE VPB S200, S300



CHB EN 2644-5
531224

# Table of Contents


1 Important information 4
- Safety information 4
- General 4
- Serial number 4
- Recovery 4

2 For the User 5
- Maintenance 5

3 For the Installer 6
- Compatible products 6
- Delivery and handling 6
- The water heater design 8
- Pipe connections 8
- Electrical installation 10
- Commissioning and adjusting 12

4 Technical data 13
- Dimensions 13
- Technical specifications 14
- Energy labelling 14

Contact information 15

# Important information

## Safety information

This manual describes installation and service procedures for implementation by specialists.

For the latest version of the product's documentation, see nibe.eu.

This appliance can be used by children aged from 8 years and above and persons with reduced physical, sensory or mental capabilities or lack of experience and knowledge if they have been given supervision or instruction concerning use of the appliance in a safe way and understand the hazards involved. Children shall not play with the appliance. Cleaning and user maintenance shall not be made by children without supervision.

This is an original manual. It may not be translated without the approval of NIBE.

Rights to make any design or technical modifications are reserved.

©NIBE 2026.

Water may drip from the safety valve's overflow pipe. The overflow pipe must be routed to a suitable drain, to prevent hot water splashes from causing harm. The overflow pipe must be inclined along its entire length to prevent pockets where water can accumulate, and must be frost-proof. The overflow pipe must be at least the same size as the safety valve. The overflow pipe must be visible and its mouth must be open and not placed close to electrical components.

The safety valves must be actuated regularly to remove dirt and to check that they are not blocked.

### SYMBOLS

Explanation of symbols that may be present in this manual.

**CAUTION!**

This symbol indicates danger to person or machine.

**NOTE!**

This symbol indicates important information about what you need to consider when installing, servicing or maintaining the installation.

### MARKING

Explanation of symbols that may be present on the product's label(s).



Danger to person or machine.



Read the User Manual.

## General

NIBE VPB S is designed and manufactured according sound engineering practice[1] in order to ensure safe usage.

[1] Pressure Equipment Directive 2014/68/EU Article 4 point 3.

## Serial number

The serial number can be found at the bottom right of the front cover.

**NOTE!**

You need the product's (14 digit) serial number for servicing and support.

## Recovery



Leave the disposal of the packaging to the installer who installed the product or to special waste stations.

Do not dispose of used products with normal household waste. It must be disposed of at a special waste station or dealer who provides this type of service.

Improper disposal of the product by the user results in administrative penalties in accordance with current legislation.

# For the User

## Maintenance

### SAFETY VALVE(NOT ENCLOSED)

You can find the safety valve on the incoming pipe (cold water) to NIBE VPB S.

The water heater's safety valve sometimes releases a little water after hot water usage. This is because the cold water, which enters the water heater to replace the hot water, expands when heated causing the pressure to rise and the safety valve to open.

The function of the safety valve must be checked regularly. Perform checks as follows:

1. Open the valve.
2. Check that water is flowing through it.
3. Close the valve.

> **CAUTION!**
>
> If this pressurised water heater develops a fault, e.g. a flow of hot water from the overflow pipe, turn the heat pump off and contact your installer.

> **CAUTION!**
>
> Do not remove or adjust any components that are part of this pressurised water heater. Contact your installer!

> **TIP!**
>
> The safety valve is not delivered with NIBE VPB S. Contact your installer if you are unsure how to check it.

### EMPTYING

#### The water heater

Draining is performed through the siphon (using hose) in the cold water connection (XL3).

#### Charge coil

Draining is performed through the siphon (using hose) in the docking connection, return to heat pump (XL9).

### VPB S200 / VPB S300

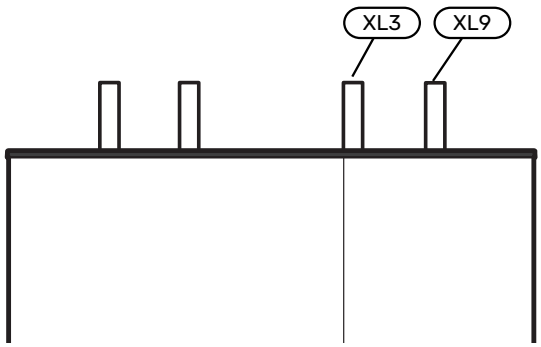


### SERVICE

If servicing is required, contact your installer.

> **NOTE!**
>
> You need the product's (14 digit) serial number for servicing and support.

Servicing should only be carried out by persons with the necessary expertise.

When replacing components on NIBE VPB S only replacement parts from NIBE may be used.

# For the Installer

## Compatible products

Information about compatible products can be found at nibe.eu.

## Delivery and handling

### TRANSPORT

NIBE VPB S should be transported and stored vertically in a dry place.

However, the NIBE VPB S can be carefully laid on its back when being moved into the building.

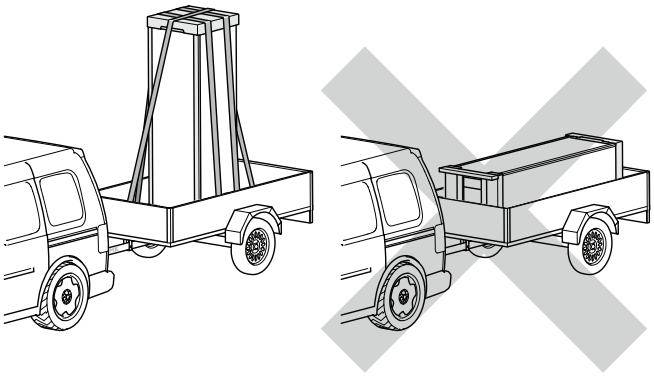

### ASSEMBLY

- Position NIBE VPB S on a solid foundation indoors that withstands water and the weight of the product.
- Use the product's adjustable feet to attain a horizontal and stable set-up.

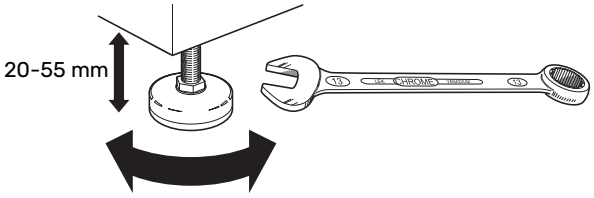


- Since water comes from NIBE VPB S, the area where NIBE VPB S is located must be equipped with floor drainage.
- The space where NIBE VPB S is located must be frost-free.

### SUPPLIED COMPONENTS

#### NIBE VPB S (Only enamel)

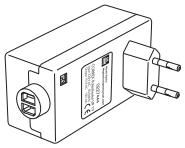

1 x Potentiostat

### HANDLING PANELS

#### Remove the front hatch

1. Pull the panel's top edge towards you and lift diagonally upwards to remove it from the frame.

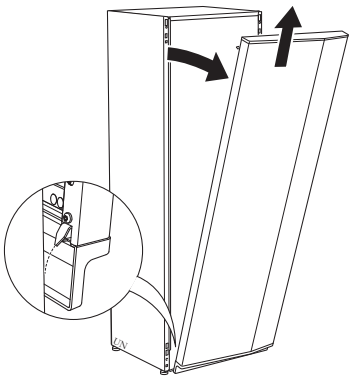

#### Fit the front hatch

1. Hook one bottom corner of the front onto the frame.

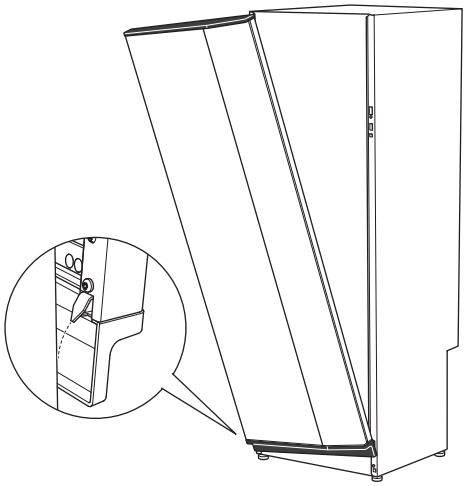

2. Hook the other corner in place.

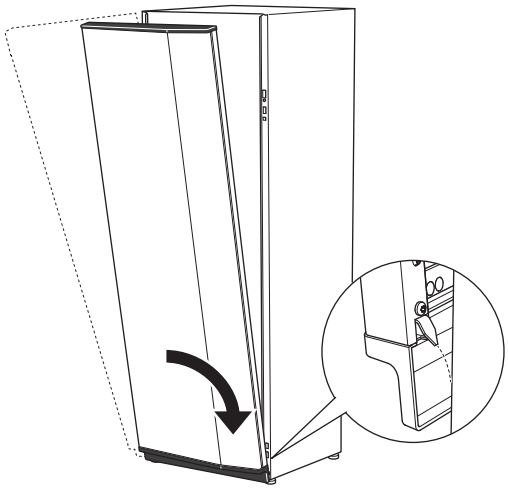

3. Press the front's top section against the frame.

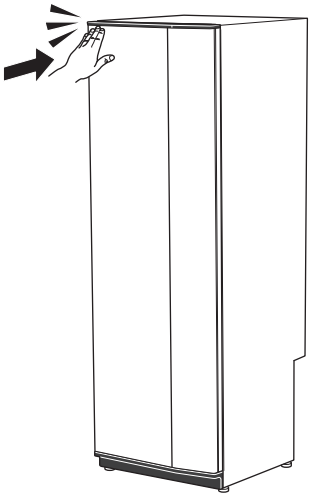

## Remove side panels

The side panels can be removed to facilitate the installation.

1. Remove the screws from the upper and lower edges.

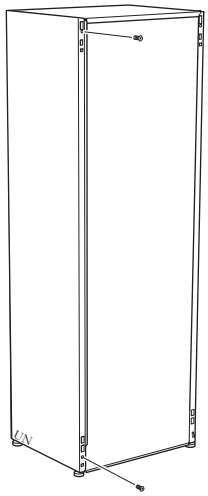

2. Turn the panel outwards slightly.

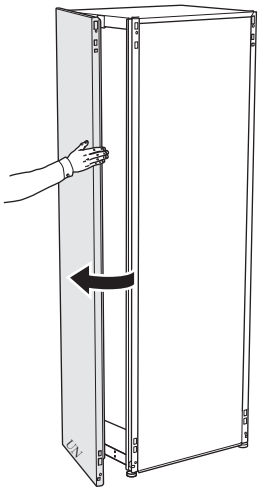

3. Move the panel outwards and backwards.

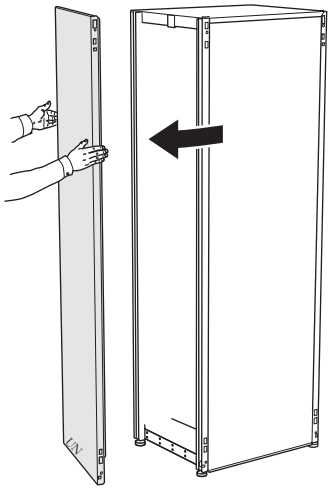

4. Assembly takes place in the reverse order.

# The water heater design

VPB S200

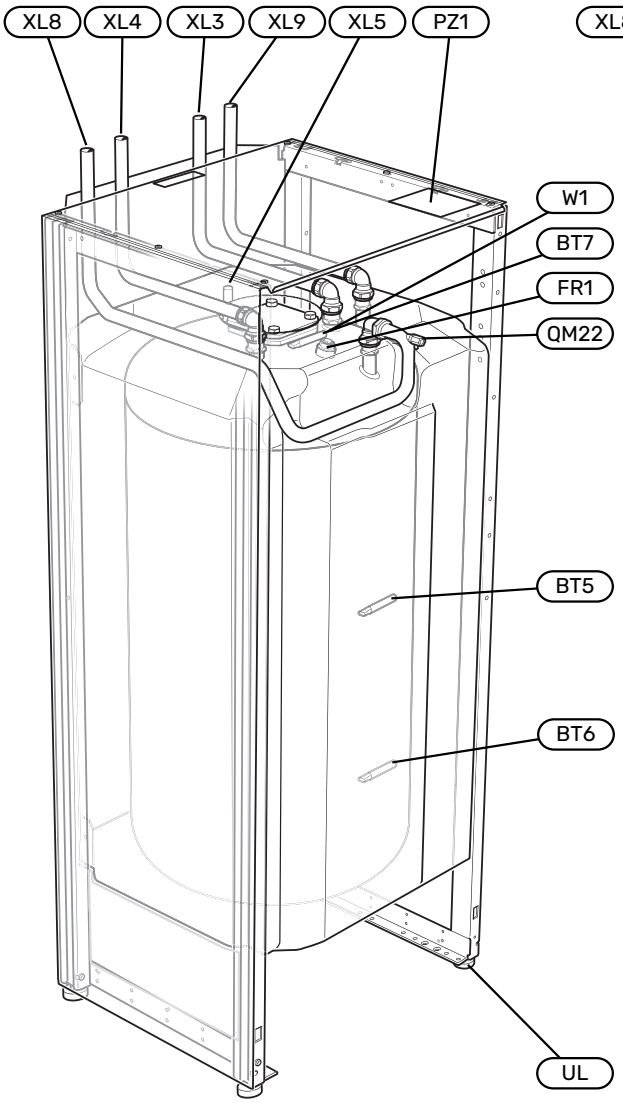


VPB S300

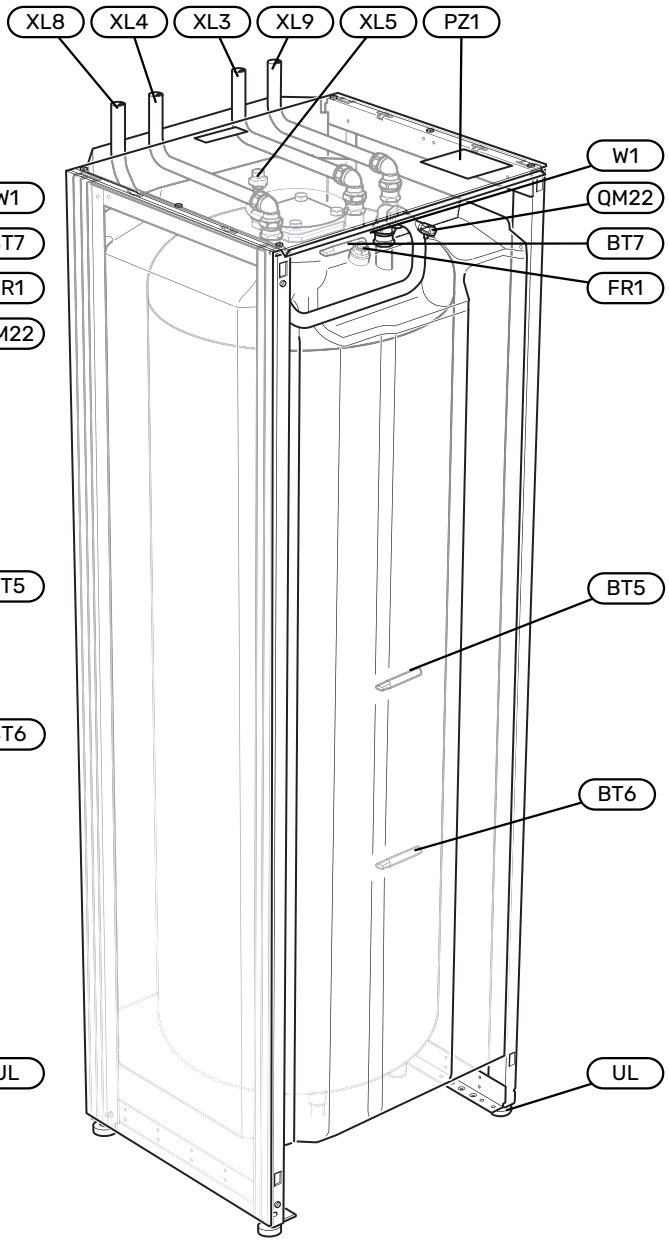


### PIPE CONNECTIONS

XL3 Cold water connection
XL4 Hot water connection
XL5 Connection, hot water circulation[1]
XL8 Docking connection, supply line (from heat pump)
XL9 Docking connection, return line (to heat pump)

1 Applies only to enamel and stainless steel.

### HVAC COMPONENTS

QM22 Venting, charge coil
UA4 Submerged tube for control sensor for external heat source (BT54)

### SENSORS

BT5 Controlling hot water sensor
BT6 Controlling hot water sensor
BT7 Display hot water sensor

### ELECTRICAL COMPONENTS

FR1 Direct-current anode (NIBE VPB S enamel only)
W1 Cable to direct-current anode (NIBE VPB S enamel only)

### MISCELLANEOUS

PZ1 Rating plate
UL Adjustable feet

Designations according to standard EN 81346-2.

# Pipe connections

### GENERAL

Pipe installation must be carried out in accordance with current norms and directives.

NOTE!

Ensure that incoming cold water is clean. When using a private well, it is important to take a water sample. Depending on the water quality, it may be necessary to supplement with an extra water filter.

CAUTION!

The pipe installation has to be flushed clean before the product is connected, to prevent any contaminants from damaging the components. If there is a risk that magnetite may be present, a magnetite filter should be installed.

CAUTION!

Water may drip from the safety valve's overflow pipe. The overflow pipe must be routed to a suitable drain, to prevent hot water splashes from causing harm. The overflow pipe must be inclined along its entire length to prevent pockets where water can accumulate, and must be frost-proof. The overflow pipe must be at least the same size as the safety valve. The overflow pipe must be visible and its mouth must be open and not placed close to electrical components.

## PIPE DIMENSIONS

### VPB S200 / VPB S300

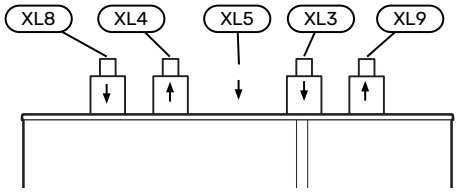


| Connection | | |
|---|---|---|
| XL3 Cold water ⌀ | mm | 22 |
| XL4 Hot water ⌀ | mm | 22 |
| XL5 Hot water circulation ⌀ | mm | 15 |
| XL8 Docking connection, supply line ⌀ | mm | 22 |
| XL9 Docking connection, return line ⌀ | mm | 22 |

## SYMBOL KEY

| Symbol | Meaning |
|---|---|
| | Unit box |
| | Shut-off valve |
| | Non-return valve |
| | Mixing valve |
| | Circulation pump |
| | Expansion vessel |
| | Filterball |
| | Pressure gauge |
| | Safety valve |
| | Temperature sensor |
| | Trim valve |
| | Heat pump |
| | Heating system |
| | Domestic hot water |
| | Hot water circulation |
| | Addition |

## SYSTEM DIAGRAM

CAUTION!

This is the outline diagram. Actual installations must be planned according to applicable standards.

NIBE VPB S is a series of water heaters that are suitable for connection to e.g. a heat pump.

Further information about the system principle is available at nibe.eu and in the manuals for the heat sources used.

### VPB S200 / VPB S300

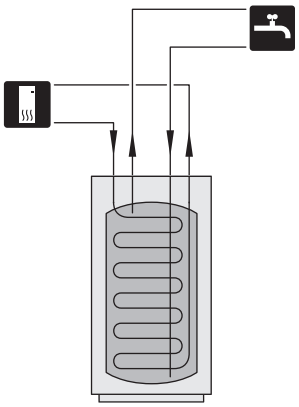

### TO HEAT PUMP

NIBE VPB S may only be docked with a NIBE heat pump, for example NIBE S1157.

The heat pump's supply and return lines are connected to docking connection, supply (XL8) and docking connection, return (XL9) on NIBE VPB S.

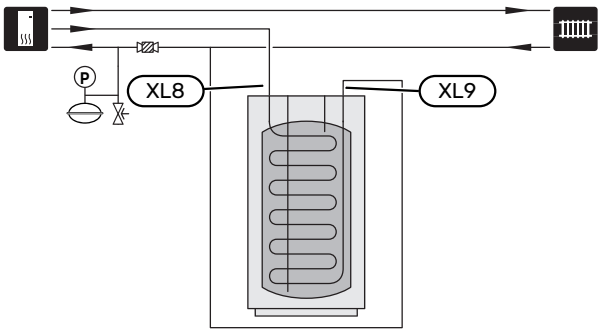


### COLD AND HOT WATER

#### Connecting cold and hot water

Install as follows:

- shut-off valve
- non-return valve
- mixing valve

  A mixer valve must also be installed, if the factory setting for hot water is changed. National regulations must be observed.
- pressure relief valve

  The safety valve must have an opening pressure of max. 1.0 MPa (10.0 bar).

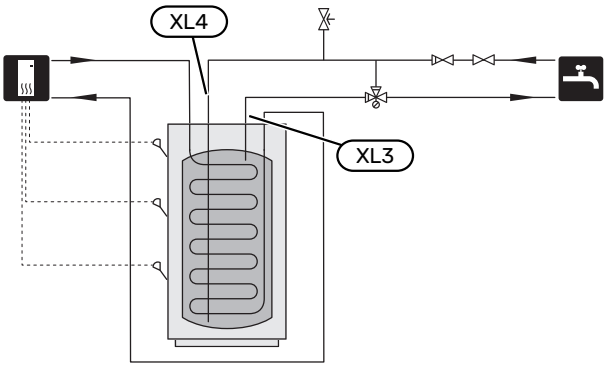


### HOT WATER CIRCULATION (HWC)

A circulation pump can be controlled by the main product to circulate the hot water. The circulating water must have a temperature that prevents bacterial growth and scalding, and national standards must be met.

The HWC return is connected to the HWC connection (XL5).

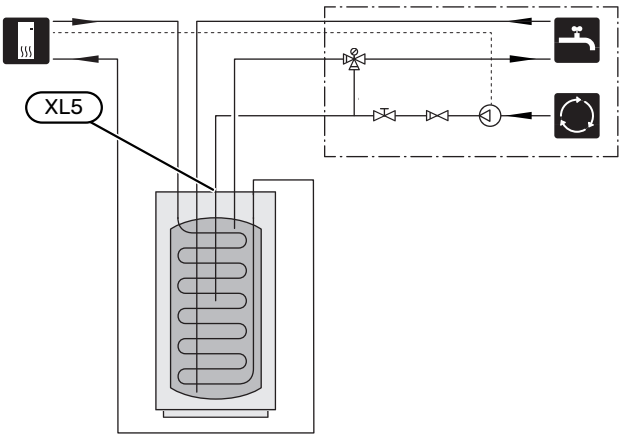


## Electrical installation

### GENERAL

Electrical installation and wiring must be carried out in accordance with national provisions.

> **CAUTION!**
>
> Electrical installation and any servicing must be carried out under the supervision of a qualified electrician. Turn off the power with the circuit breaker before servicing.

### DIRECT-CURRENT ANODE

NIBE VPB S Enamel is equipped with direct-current anode and enclosed with potentiostat from the factory. The anode cable (W1) is installed in the anode from the factory and only needs to be connected to the potentiostat.

1. Route the anode cable (W1) along the docking pipe, supply line (XL8).
2. Connect the anode cable (W1) to the potentiostat.
3. Connect the potentiostat to a suitable 230 V wall socket.

> **CAUTION!**
>
> The cable between the potentiostat and the anode must either be extended or shortened.

The figure shows VPB S200 enamel

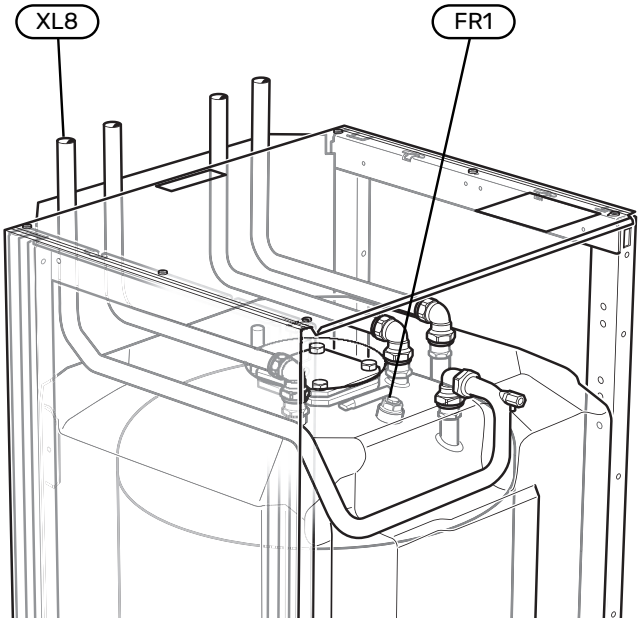


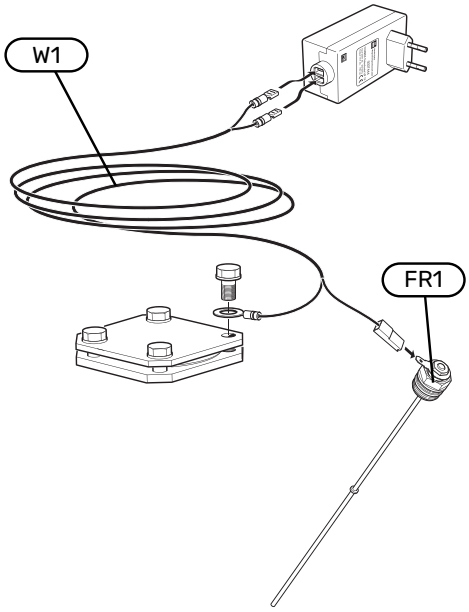

# Commissioning and adjusting

## FILLING AND VENTING

### Filling the hot water heater

1. Open a hot water tap in the house.
2. Fill the hot water heater through the cold water connection (XL3).
3. When the water that comes out of the hot water tap is no longer mixed with air, the water heater is full and the hot water tap can be closed.

### Topping up the charge coil

1. Open the externally mounted filling valve. Fill the coil in the hot water heater and the rest of the climate system with water.
2. Open the vent valve (QM22).
3. When the water that exits the vent valve (QM22) is not mixed with air, close the valve. After a while, the pressure starts to rise.
4. Close the filling valve when the correct pressure is obtained.

### Venting the charge coil

1. Vent the coil via the vent valve (QM22) and the rest of the climate system via the relevant vent valves.
2. Keep topping up and venting until all air has been removed and the pressure is correct.

The figure shows VPB S200.

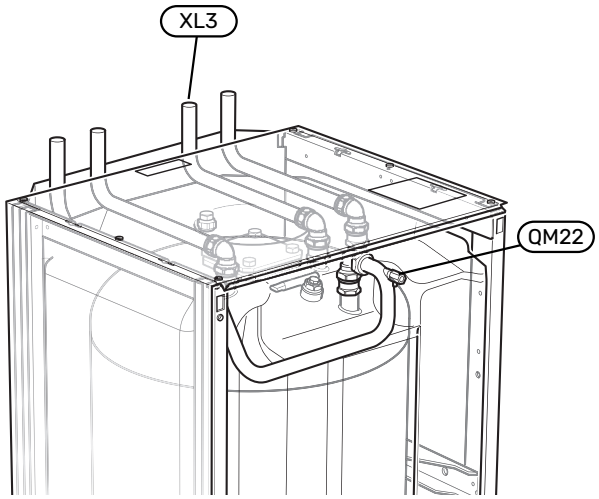


## START-UP AND INSPECTION

### Pressure drop diagram, charge coil

Docking connection, supply line (XL8) and docking connection, return line (XL9).

### VPB S200

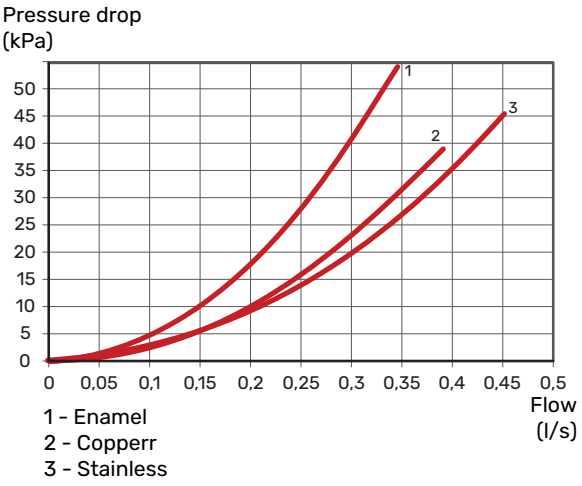


1 - Enamel
2 - Copperr
3 - Stainless

### VPB S300

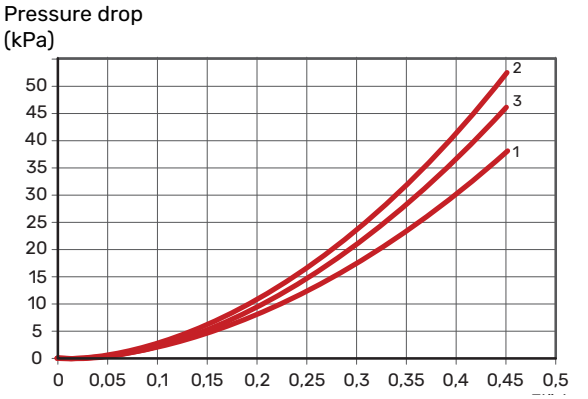


1 - Enamel
2 - Copperr
3 - Stainless

# Technical data

## Dimensions

VPB S200

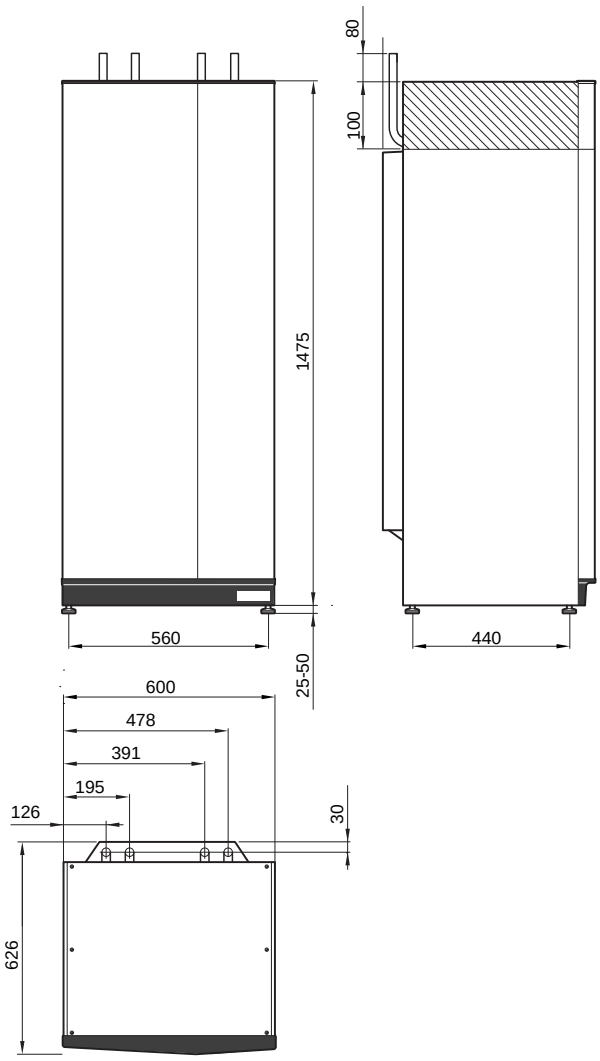


VPB S300

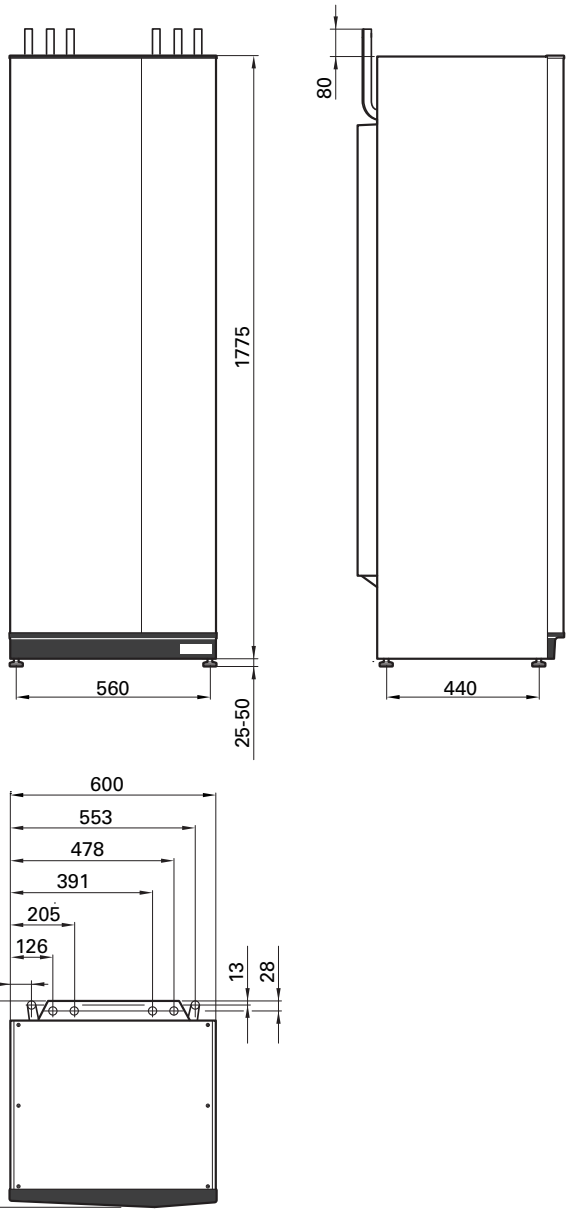

# Technical specifications

| VPB S200 | | Copper | Enamel | Stainless |
|---|---|---|---|---|
| **Heating medium circuit** | | | | |
| Max pressure in the heating medium circuit | bar/MPa | | 0.3 (3) | |
| **Pipe connections** | | | | |
| Hot water ext Ø | mm | | 22 | |
| Cold water ext Ø | mm | | 22 | |
| Hot water circulation ext Ø | mm | | 15 | |
| Docking ext Ø | mm | | 22 | |
| **Hot water and heating section** | | | | |
| Volume coil | litre | 2.0 | 4.8 | 7.8 |
| Volume hot water heater | litre | 178 | 178 | 176 |
| Max operating temperature | °C | | 85 | |
| Opening pressure, safety valve | MPa (bar) | | 1.0 (10) | |
| Heating time (10°C to 50°C) 8 kW charge power | h | | 1 | |
| Equivalent amount of hot water (40 °C)[1] | litre | 230 | 238 | 235 |
| **Dimensions and weight** | | | | |
| Width | mm | | 600 | |
| Depth | mm | | 626 | |
| Height | mm | | 1500 | |
| Ceiling height | mm | | 1670[2] | |
| Weight | kg | 101 | 111 | 80 |
| Part No. | | 081 139 | 081 140 | 081 141 |
| EPREL | | 248 646 | 248 647 | 248 648 |

1 At incoming temperature 10 °C and a domestic water flow of 0.25 l/s.

2 Med fötterna avmonterade blir reshöjden ca. 1650 mm.

| VPB S300 | | Copper | Enamel | Stainless |
|---|---|---|---|---|
| **Heating medium circuit** | | | | |
| Max pressure in the heating medium circuit | bar/MPa | | 0.3 (3) | |
| **Pipe connections** | | | | |
| Hot water ext Ø | mm | | 22 | |
| Cold water ext Ø | mm | | 22 | |
| Hot water circulation ext Ø | mm | | 15 | |
| Docking ext Ø | mm | | 22 | |
| **Hot water and heating section** | | | | |
| Volume coil | litre | 2.0 | 8.4 | 8.8 |
| Volume hot water heater | litre | 278 | 274 | 282 |
| Max operating temperature | °C | | 85 | |
| Opening pressure, safety valve | MPa (bar) | | 1.0 (10) | |
| Heating time (10°C to 50°C) 8 kW charge power | h | | 1.5 | |
| Equivalent amount of hot water (40 °C)[1] | litre | 362 | 364 | 376 |
| **Dimensions and weight** | | | | |
| Width | mm | | 600 | |
| Depth | mm | | 626 | |
| Height | mm | | 1800 | |
| Ceiling height | mm | | 1950[2] | |
| Weight | kg | 130 | 143 | 101 |
| Part No. | | 081 142 | 081 144 | 081 143 |
| EPREL | | 248 649 | 248 651 | 248 650 |

1 At incoming temperature 10 °C and a domestic water flow of 0.5 l/s.

2 Med fötterna avmonterade blir reshöjden ca. 1930 mm.

# Energy labelling

| Supplier | | NIBE | | |
|---|---|---|---|---|
| **Model** | | **VPB S200 Cu/E/R** | **VPB S300 Cu/E/R** | **VPBS S300 Cu/E** |
| Efficiency class[1] | | **C** | **C** | **C** |
| Heat loss | W | 66 | 88 | 95 |
| Volume | l | 178 / 178 / 176 | 278 / 274 / 282 | 277 / 270 |

1 Scale for the product's efficiency class A+ to F.

# Contact information


**AUSTRIA**
NIBE GmbH
Gahberggasse 11
4861 Schörfling am Attersee
Tel: +43 (0)7662 8963-0
kontakt@nibe.at
nibe.at

**CZECH REPUBLIC**
Družstevní závody Dražice - strojírna s.r.o.
Dražice 69, 29471 Benátky n. Jiz.
Tel: +420 326 373 801
nibe@nibe.cz
nibe.cz

**DENMARK**
Vølund Varmeteknik A/S
Industrivej Nord 7B, 7400 Herning
Tel: +45 97 17 20 33
info@volundvt.dk
volundvt.dk

**FINLAND**
NIBE Energy Systems Oy
Juurakkotie 3, 01510 Vantaa
Tel: +358 (0)9 274 6970
info@nibe.fi
nibe.fi

**FRANCE**
NIBE Energy Systems France SAS
Zone industrielle RD 28
Rue du Pou du Ciel, 01600 Reyrieux
Tél: 04 74 00 92 92
info@nibe.fr
nibe.fr

**GERMANY**
NIBE Systemtechnik GmbH
Am Reiherpfahl 3, 29223 Celle
Tel: +49 (0)5141 75 46 -0
info@nibe.de
nibe.de

**GREAT BRITAIN**
NIBE Energy Systems Ltd
3C Broom Business Park,
Bridge Way, S41 9QG Chesterfield
Tel: +44 (0)330 311 2201
info@nibe.co.uk
nibe.co.uk

**NETHERLANDS**
NIBE Energietechniek B.V.
Bagven Park 11, 4838 EH Breda
Tel: +31 (0)168 47 77 22
info@nibenl.nl
nibenl.nl

**NORWAY**
ABK-Qviller AS
Brynsengfaret 6, 0667 Oslo
Tel: (+47) 23 17 05 20
post@abkqviller.no
nibe.no

**POLAND**
NIBE-BIAWAR Sp. z o.o.
Ul. Prof. Andrzeja Kalicinskiego 1
15-569 Bialystok
Tel: +48 (0)85 66 28 490
biawar.com.pl

**SWEDEN**
NIBE Energy Systems
Box 14
Hannabadsvägen 5, 285 21 Markaryd
Tel: +46 (0)433-27 30 00
info@nibe.se
nibe.se

**SWITZERLAND**
NIBE Wärmetechnik c/o ait Schweiz AG
Industriepark, CH-6246 Altishofen
Tel. +41 (0)58 252 21 00
info@nibe.ch
nibe.ch


For countries not mentioned in this list, contact NIBE Sweden or check nibe.eu for more information.

NIBE Energy Systems
Hannabadsvägen 5
Box 14
SE-285 21 Markaryd
info@nibe.se
nibe.eu

CHB EN 2644-5 531224

This is a publication from NIBE Energy Systems. All product illustrations, facts and data are based on the available information at the time of the publication's approval.

NIBE Energy Systems accepts no liability for any factual or printing errors.

©2026 NIBE ENERGY SYSTEMS

531224