Installer manual

NIBE

Ground source heat pump
NIBE S1257

IHB EN 2626-1
731712

Quick guide

NAVIGATION

Select

Most options and functions are activated by lightly pressing on the display with your finger.

Scroll

If the menu has several sub-menus, you can see more information by dragging up or down with your finger.

Browse

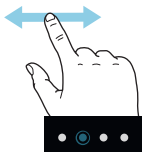

The symbols at the bottom edge show if there are more pages.

Drag to the right or left with your finger to browse between the pages.

Smartguide

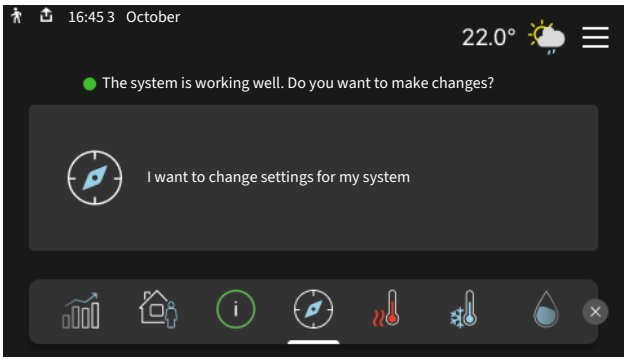

Smartguide helps you both to view information about the current status and to make the most common settings easily. The information that you see depends on the product you have and the accessories that are connected to the product.

Setting the indoor temperature.

Here, you can set the temperature in the installation's zones.

Increasing hot water temperature

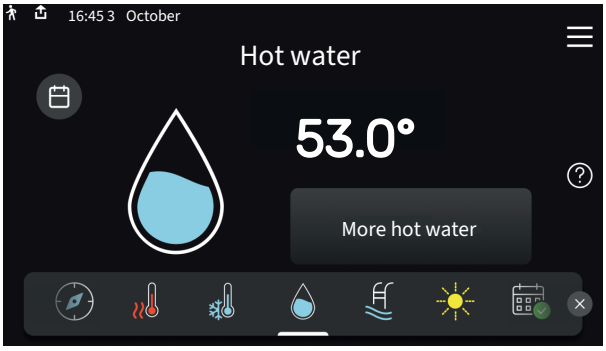

Here, you can start or stop a temporary increase in the hot water temperature.

Product overview

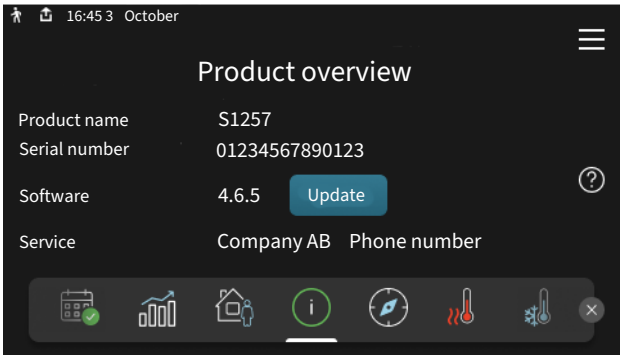

Here, you can find information about the product name, the product's serial number, the version of the software and contact details for the company that is supplying service. When a software update is available, you can start the update here (provided that S1257 is connected to myUplink).

Table of Contents

1 Important information 4
Safety information 4
Symbols 4
Marking 4
Serial number 4
Safety valve 4
Inspection of the installation 5

2 Delivery and handling 6
Transport 6
Assembly 6
Supplied components 8
Handling panels 8
Removing insulation 10
Installing pipes for safety ventilation 10

3 The heat pump design 13
General 13
Distribution boxes 14
Evacuation fan 14
Cooling module (EP14) 14

4 Pipe and air connections 16
General 16
Dimensions and pipe connections 17
Brine side 18
Climate system 19
Cold and hot water 19
Installation alternative 19
Connection of safety ventilation 21

5 Electrical connections 22
General 22
Connections 24
Settings 30

6 Commissioning and adjusting 32
Filling and venting 32
Start-up and inspection 33
Setting the heating curve 35

7 myUplink 37
Specification 37
Connection 37
myUplink PRO 37
API 37

8 Control - Introduction 38
Display unit 38
Navigation 39
Menu types 39
Climate systems and zones 41
Update the software 41

9 Control - Menus 42
Menu 1 - Indoor climate 42
Menu 2 - Hot water 45
Menu 3 - Info 47
Menu 4 - My system 48
Menu 5 - Connection 52
Menu 6 - Scheduling 53
Menu 7 - Installer settings 54

10 Service 64
Service actions 64

11 Malfunctions 69
Info-menu 69
Manage alarm 69
Troubleshooting 69

12 Accessories 71

13 Technical data 73
Dimensions 73
Electrical data 74
Technical specifications 76
Energy labelling 80

Item register 90

Contact information 95

Important information

Safety information

This manual describes installation and service procedures for implementation by specialists.

The manual must be left with the customer.

For the latest version of the product's documentation, see nibe.eu.

> **CAUTION!**
> Read the enclosed safety manual before installation or servicing.

Symbols

Explanation of symbols that may be present in this manual.

> **CAUTION!**
> This symbol indicates danger to person or machine.

> **NOTE!**
> This symbol indicates important information about what you should consider when installing or servicing the installation.

> **TIP!**
> This symbol indicates tips on how to facilitate using the product.

Marking

Explanation of symbols that may be present on the product's label(s).

Fire hazard!

Dangerous voltage.

Read the User Manual.

Read the Installer Manual.

Serial number

The serial number can be found at the bottom right on S1257, in the display on the home screen "Product overview" and on the type plate (PZ1).

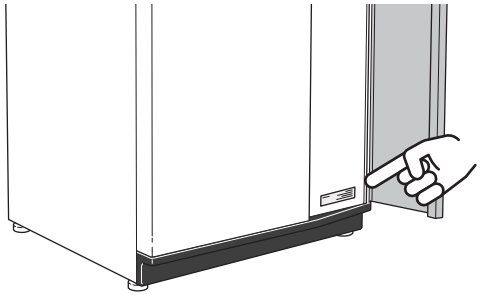

> **NOTE!**
> You need the product's (14 digit) serial number for servicing and support.

Safety valve

> **CAUTION!**
> S1257 must be connected to a separate ventilation system that vents the refrigerant outdoors in the event of a leak.

Inspection of the installation

Current regulations require the heating installation to be inspected before it is commissioned. The inspection must be carried out by a suitably qualified person. In addition, fill in the page for the installation data in the User Manual.

✔	Description	Notes	Signature	Date
Heat source				
	Köldbärarystem (page 18)			
	Grundvattensystem (page 20)			
Brine side				
	System flushed			
	System vented			
	Antifreeze			
	Level/Expansion vessel			
	Filterball			
	Safety valve			
	Shut off valves			
	Circulation pump setting			
Climate system				
	System flushed			
	System vented			
	Expansion vessel			
	Filterball			
	Safety valve			
	Shut off valves			
	Circulation pump setting			
Safety valve				
Check the duct system for the safety ventilation				
Electricity				
	Connections			
	Main voltage			
	Phase voltage			
	Fuses heat pump			
	Fuses property			
	Outside sensor			
	Room sensor			
	Current sensor			
	Safety breaker			
	Earth circuit-breaker			
Software settings				
	Emergency mode set in menu 7.1.8.2			
	Set frost protection in menu 7.1.12			

Delivery and handling

Transport

S1257 should be transported and stored vertically in a dry place. When being moved into a building, S1257 may be leant back 45 °.

Ensure that S1257 is not damaged during transport.

> NOTE!
>
> The product can be tail heavy.

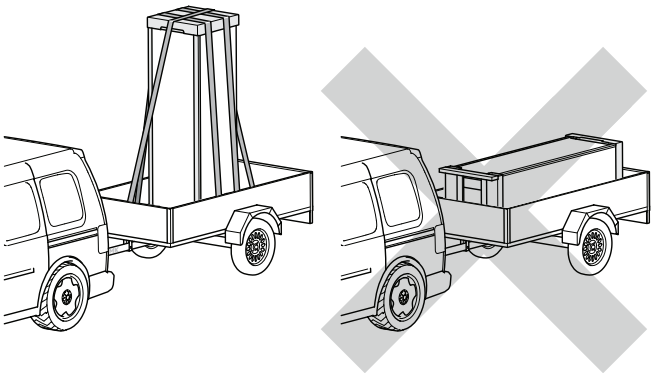

If the cooling module is pulled out and transported upright, S1257 can be transported on its back.

Remove the outer panels in order to protect them when moving in confined spaces inside buildings.

REMOVAL OF THE COOLING MODULE

To simplify transport and service, the cooling module can be pulled out of the heat pump.

See section "Pulling out the cooling module" for instructions on how to pull out the cooling module.

Assembly

- Position S1257 on a solid foundation indoors that withstands water and the weight of the product.
- Use the product's adjustable feet to attain a horizontal and stable set-up.

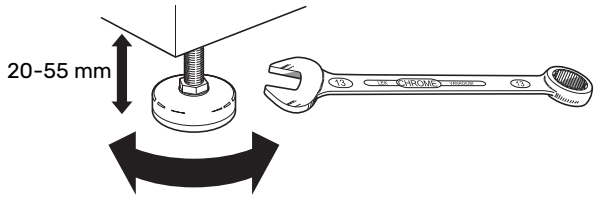

- Since water comes from S1257, the area where S1257 is located must be equipped with floor drainage.
- Install with its back to an outside wall, ideally in a room where noise does not matter, in order to eliminate noise problems. If this is not possible, avoid placing it against a wall behind a bedroom or other room where noise may be a problem.
- Wherever the unit is located, walls to sound sensitive rooms should be fitted with sound insulation.
- Route pipes so they are not fixed to an internal wall that backs on to a bedroom or living room.
- The installation area always has to have a temperature of at least 0.5 °C and max. 30 °C.

INSTALLATION AREA

Leave a free space of 800 mm in front of the product. Normal servicing and maintenance of S1257 can be carried out from the front. In exceptional cases, it may be necessary to remove the side panels. Approx. 50 mm free space is required on each side to allow the side panels to be removed. Leave free space between the heat pump and the wall behind (and any routing of supply cables and pipes), to reduce the risk of any vibrations being propagated.

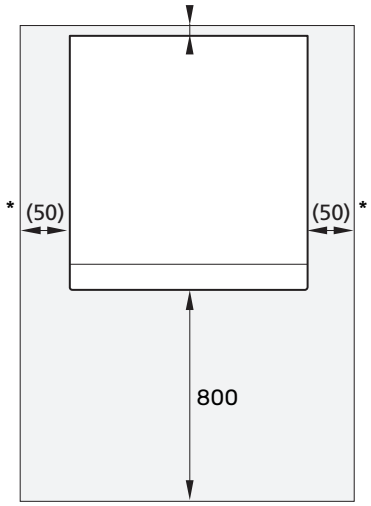

* A normal installation needs 300 – 400 mm (any side) for connection equipment, e.g. level vessel, valves and electrical equipment.

Safety zone

Installation must be carried out in accordance with current regulations.

Position the outlet for the safety ventilation at a safe distance from basement stairs and windows below ground level.

Do not position the outlet where refrigerant can accumulate, e.g. in a basement stairwell or under a deck.

Do not position the outlet in direct connection to windows, valves or anything else where there is a risk that vented refrigerant re-enters the property.

Leave free space of at least 1 m between the outlet and supply air valves, naked flames, e.g. a barbecue.

The outlet must be positioned so that it cannot be blocked by snow or leaves.

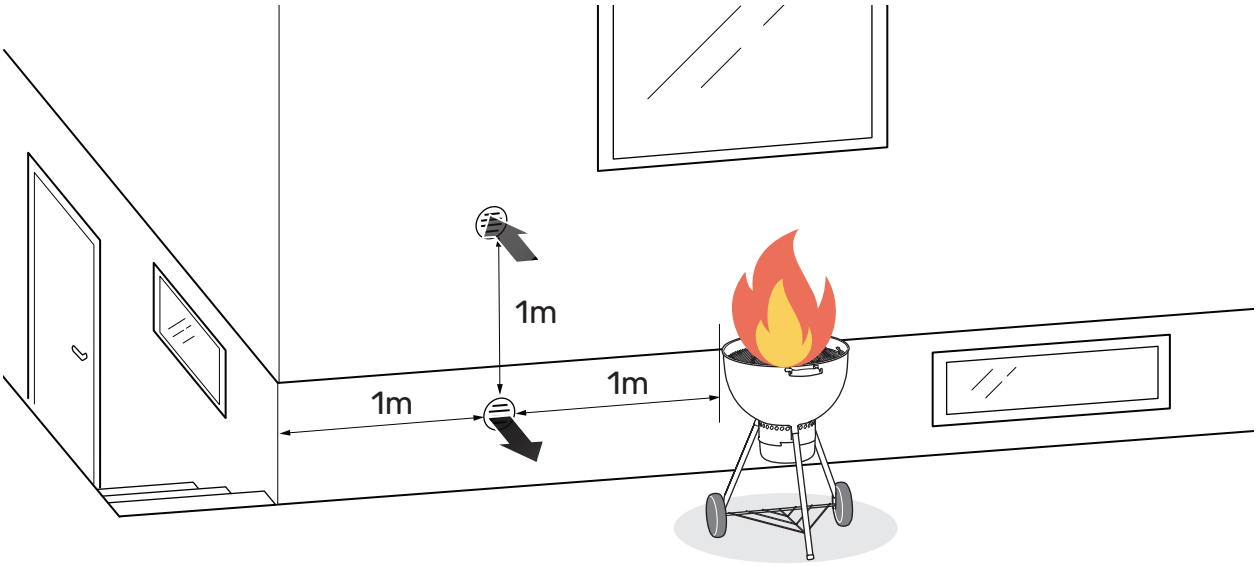

Supplied components

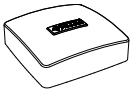

Outdoor temperature sensor (BT1)
1 x

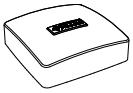

Room sensor(BT50)
1 x

Current sensor[1 2]
3 x

O-rings
8 x

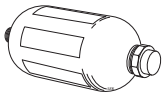

Level vessel (CM2)[1 3]
1 x

Safety valve (FL3)
0.3 MPa (3 bar)[1]
1 x

Filterball (QZ2)
8 kW
1 x G1
1 x G3/4
13 kW
1 x G1
1 x G1 1/4

Compression ring couplings
8 kW
2 x (Ø28 x G25)
2 x (Ø22 x G20)
13 kW
4 pcs (Ø28 x G25)

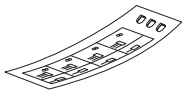

Label for external control voltage for the control system
1 x

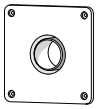

Adapter wall
Ø 50-100
1 x

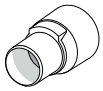

Adapter Spiro
Ø 50-63
1 x

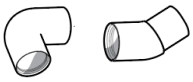

Pipe fittings for safety ventilation, Ø50 mm
13 x

1 Not Italy and the DACH countries.
2 Not 1x230 V
3 Not Denmark

LOCATION

The kit of supplied items is placed in packaging on top of the heat pump.

Handling panels

OPEN FRONT HATCH

Press the hatch's top left corner to open it.

REMOVE THE FRONT

1. Remove the screw in the hole next to the on/off button (SF1).

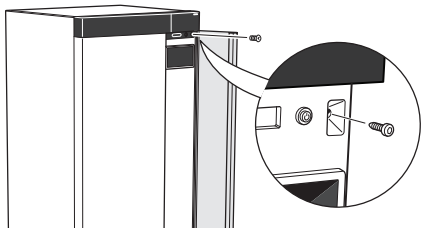

2. Pull the panel's top edge towards you and lift diagonally upwards to remove it from the frame.

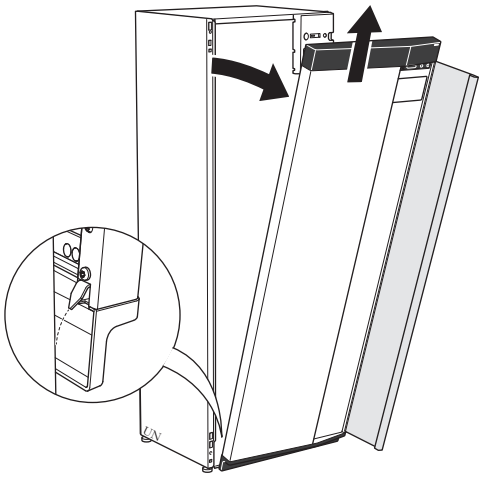

ASSEMBLE THE FRONT

1. Hook one bottom corner of the front onto the frame.

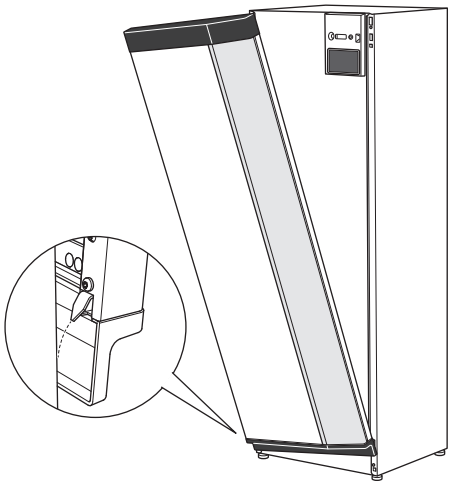

2. Hook the other corner in place.

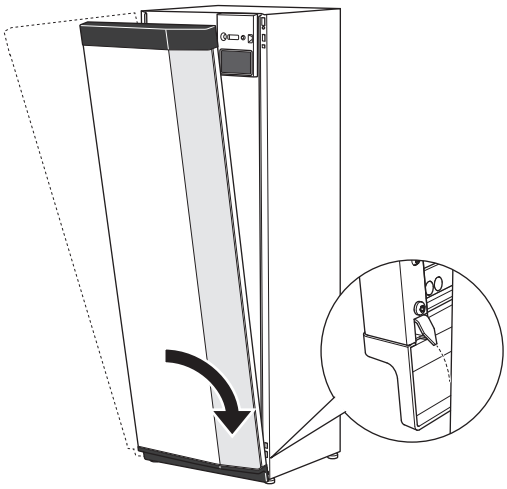

3. Check the display is straight. Adjust if necessary.

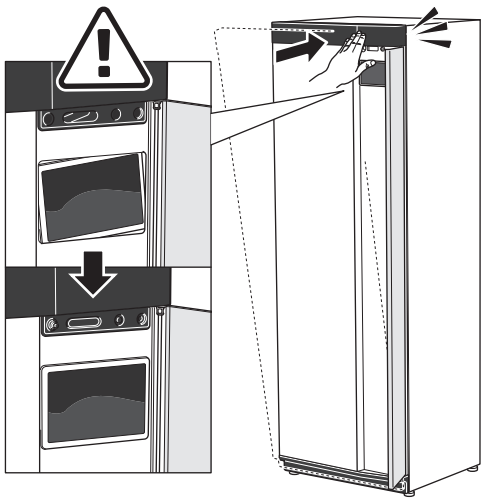

4. Press the top of the front section against the frame and screw it into place.

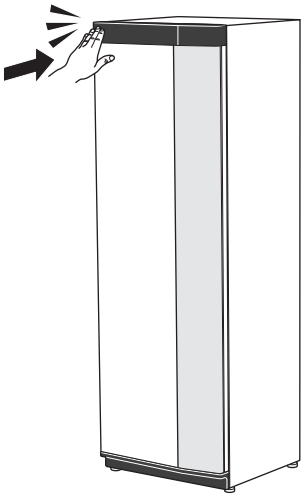

REMOVE SIDE PANEL

The side panels can be removed to facilitate the installation.

1. Remove the screws from the upper and lower edges.

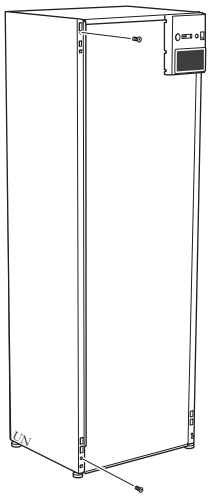

2. Turn the panel outwards slightly.

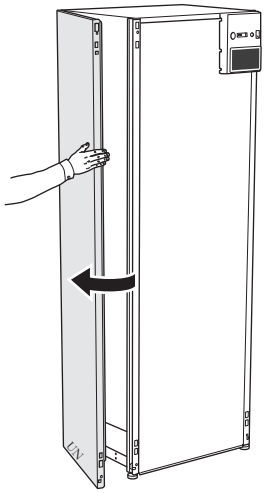

3. Move the panel outwards and backwards.

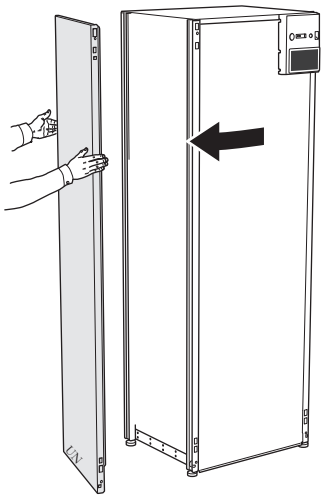

4. Assembly takes place in the reverse order.

REMOVE THE COOLING MODULE FRONT HATCH.

1. Remove the two screws at the top.

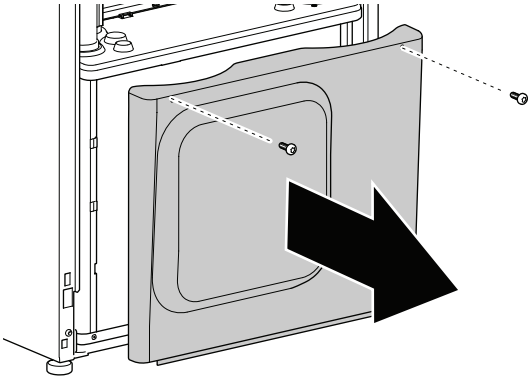

2. Pull the hatch towards yourself.

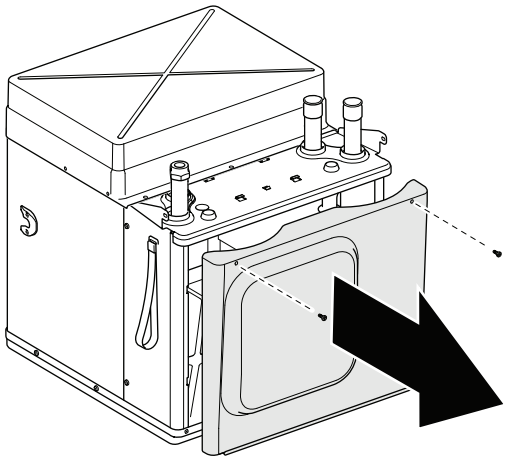

Removing insulation

The insulation can be removed to make installation easier.

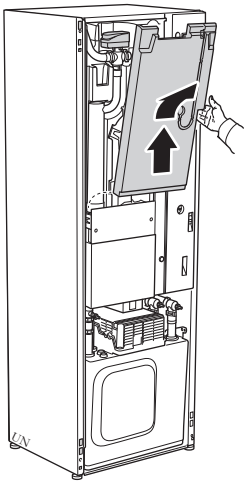

Installing pipes for safety ventilation

The enclosed pipes can be assembled in three different ways from the outlet (right/left/up) depending on the needs of the installation.

The brine pipes are difficult to adjust after the ventilation pipes have been installed.

> **CAUTION!**
>
> Depending on the installation, not all of the enclosed pipes will be used. Surplus pipes can be used in the duct system for the safety ventilation between S1257 and the wall/ceiling.

PIPE FITTINGS

1 x	Double socket Ø50x90°
2 x	Single socket Ø50x45°
3 x	Straight double socket Ø50
1 x	Double socket Ø50x45°
2 x	Single socket Ø50x30°
1 x	Single socket Ø50x15°
1 x	Pipe Ø50 - Length 300
1 x	Pipe Ø50 - Length 126
1 x	Pipe Ø50 - Length 470

VENTILATION PIPE TO THE LEFT

The left-handed version is suitable regardless of the routing of the brine pipes.

1. Remove the transport protection in the connection for outgoing air (XL44).
2. Cut the pipe that is 300 mm to a length of 225 mm.
3. Assemble the pipes.

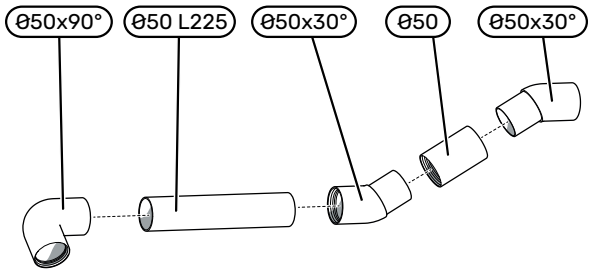

4. Fit the ventilation pipe to the connection for outgoing air (XL44).

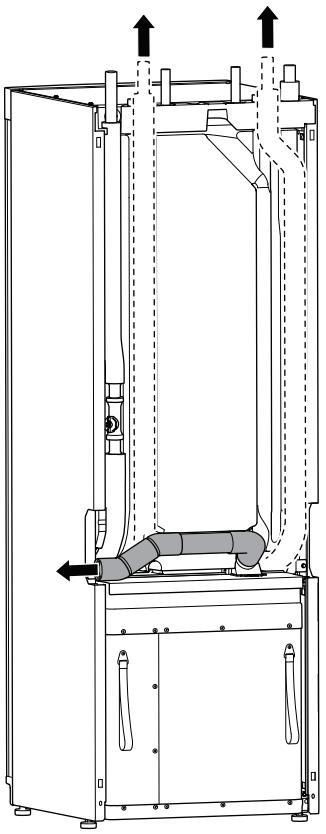

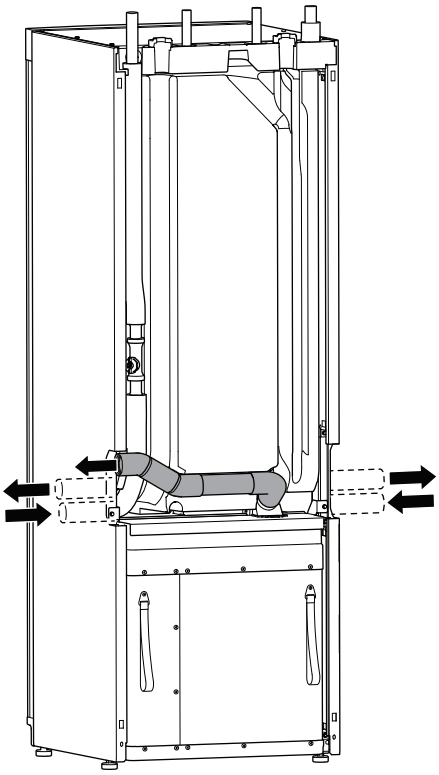

5. Press the ventilation pipe gently to bring the outlet into the fitted position.

VENTILATION PIPE TO THE RIGHT

With the right-handed version, the brine pipes must be angled to the side (right or left).

1. Remove the transport protection in the connection for outgoing air (XL44).
2. Assemble the pipes.

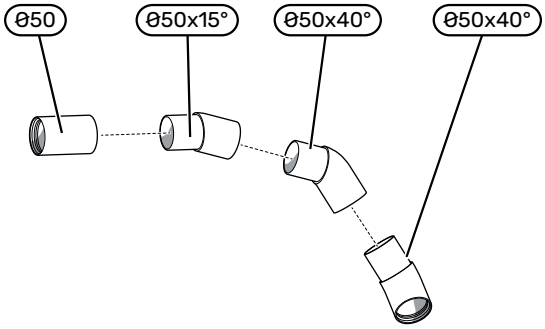

3. Fit the ventilation pipe to the connection for outgoing air (XL44).

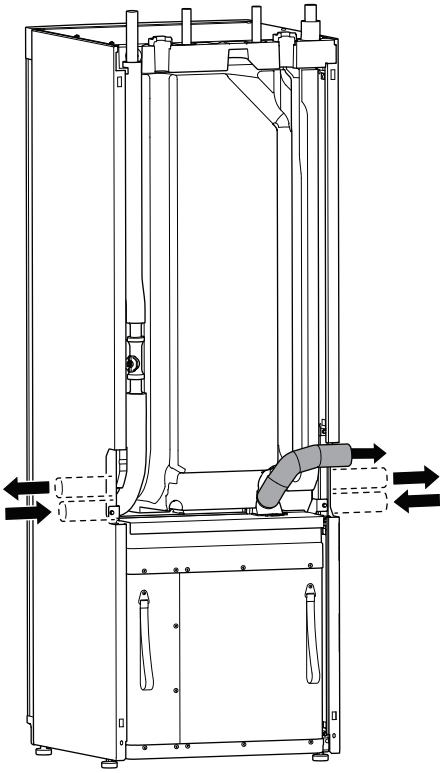

4. Press the ventilation pipe gently to bring the outlet into the fitted position.

VENTILATION PIPE UPWARDS

Upward ventilation pipe routing is suitable regardless of the routing of the brine pipes.

1. Remove the transport protection in the connection for outgoing air (XL44).
2. Assemble the pipes.

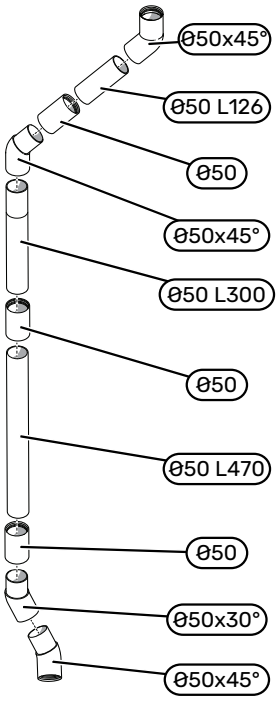

3. Cut open the recess in the heat pump's pipe holder.

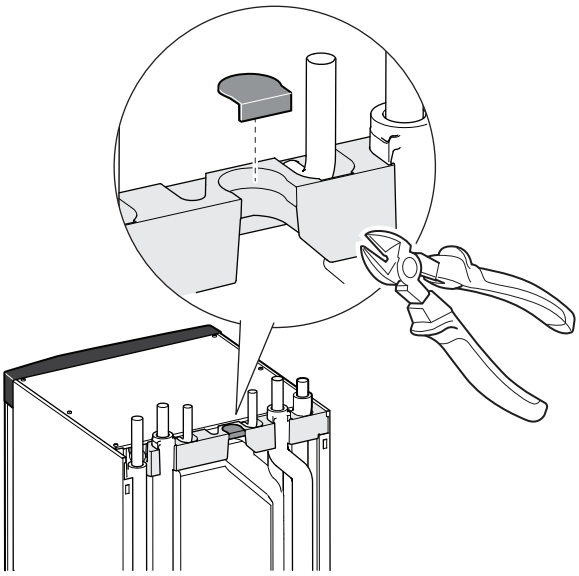

4. Fit the ventilation pipe to the connection for outgoing air (XL44).
5. Position the straight double socket Ø50 in the ventilation pipe.

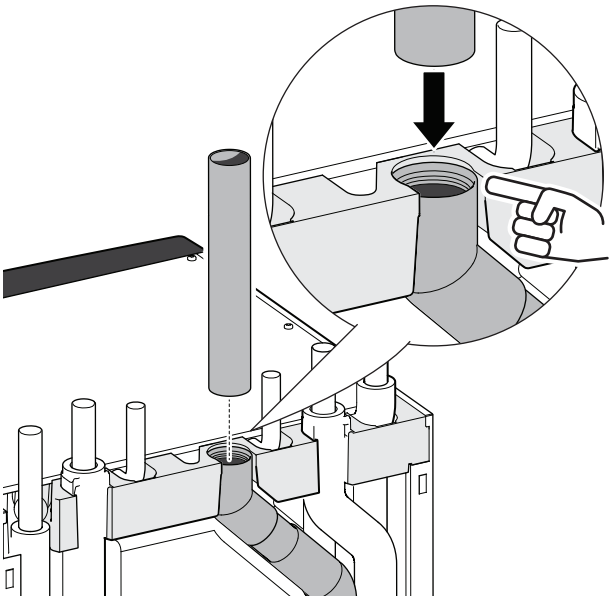

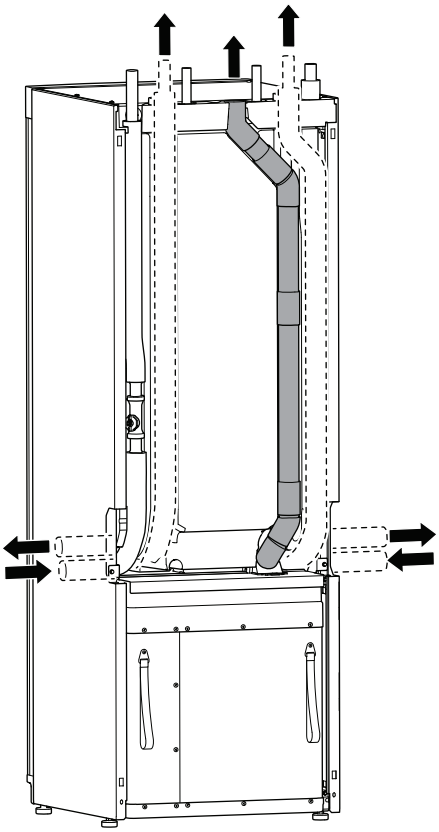

6. Press the ventilation pipe gently to bring the outlet into the fitted position.

The heat pump design

General

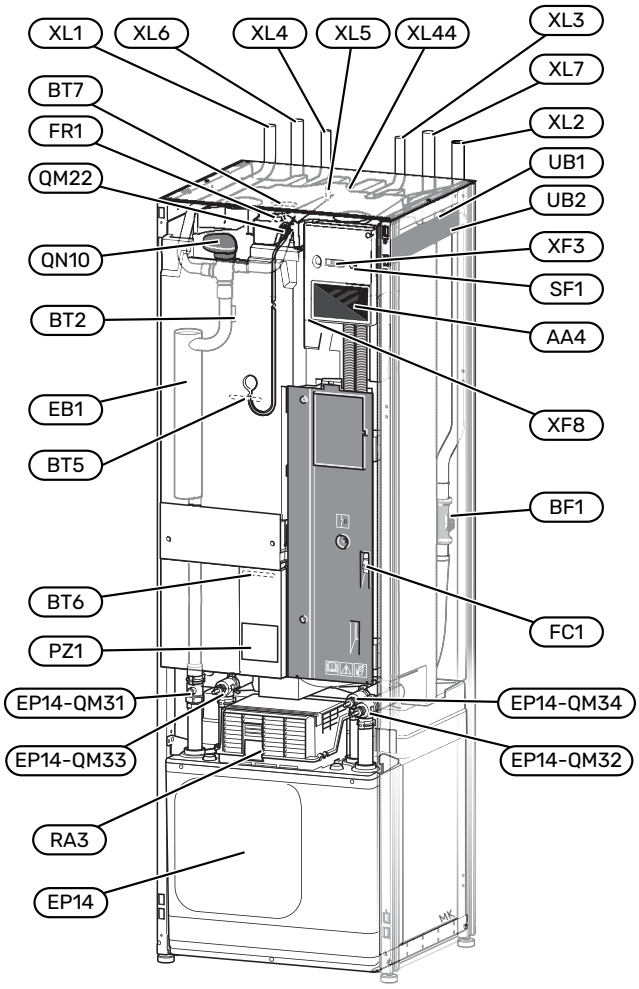

PIPE CONNECTIONS

XL1	Connection, heating medium flow
XL2	Connection, heating medium return
XL3	Connection, cold water
XL4	Connection, hot water
XL5	Connection, HWC [1]
XL6	Connection, brine in
XL7	Connection, brine out
XL44	Connection, outgoing air

1 Only heat pumps with enamelled or stainless steel vessel.

HVAC COMPONENTS

EP14	Cooling module
	EP14-QM31 Shut-off valve, heating medium supply
	EP14-QM32 Shut off valve, heating medium return
	EP14-QM33 Shut-off valve, brine in
	EP14-QM34 Shut off valve, brine out
QM22	Venting, coil
QN10	Diverter valve, climate system/hot water

SENSORS ETC.

BF1	Flow meter
BT2	Temperature sensors, heating medium flow
BT5	Temperature sensor, hot water charging start
BT6	Temperature sensor, hot water charging
BT7	Temperature sensor, hot water top

ELECTRICAL COMPONENTS

AA4	Display unit
EB1	Immersion heater
FC1	Miniature circuit breaker [1]
FR1	Electrical anode [2]
RA3	Choke [3]
SF1	On/off button
XF3	USB socket
XF8	Network connection for myUplink

1 Only S1257-8 1x230 V and 3x230 V.
2 Only heat pump with enamelled vessel.
3 Only S1257-13 3x400 V

MISCELLANEOUS

PZ1	Rating plate
UB1	Cable gland
UB2	Cable gland

Designations according to standard EN 81346-2.

Distribution boxes

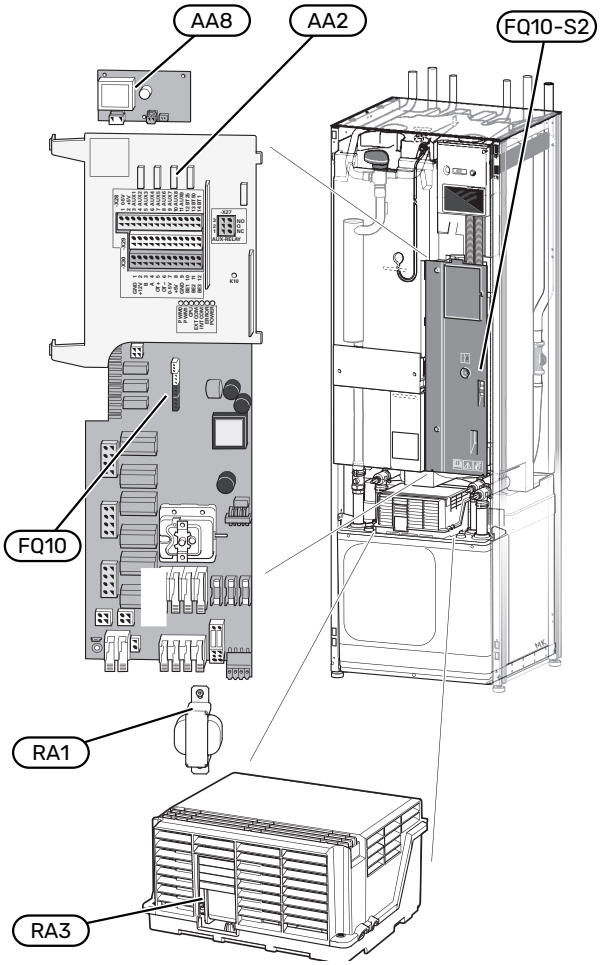

ELECTRICAL COMPONENTS

AA2	Base card
AA8	Electrical anode board [1]
FQ10	Temperature limiter
	FQ10-S2 Reset button for temperature limiter
RA1	Choke [2]
RA3	Choke [3]

1 Only heat pump with enamelled vessel.

2 Only S1257-13 3x400 V

3 Only S1257-13 3x400 V

Evacuation fan

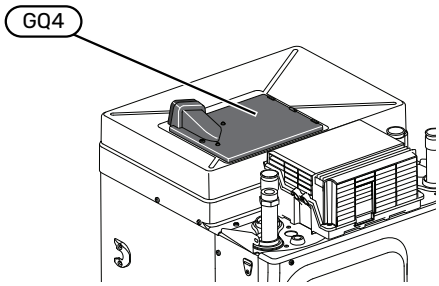

ELECTRICAL COMPONENTS

GQ4	Evacuation fan

Cooling module (EP14)

3x400 V 8

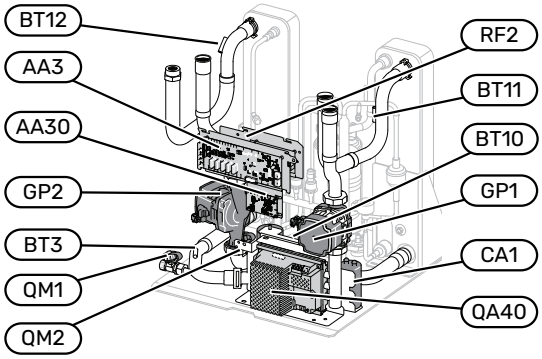

1x230 V 13
3x230 V 13

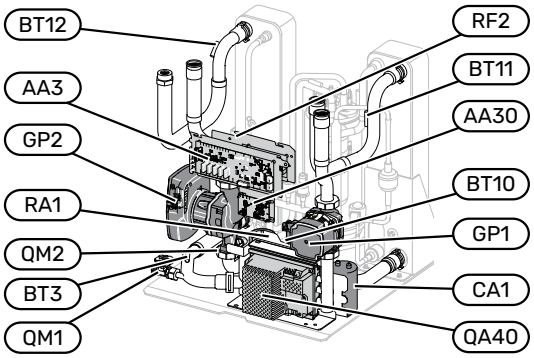

3x400 V 13

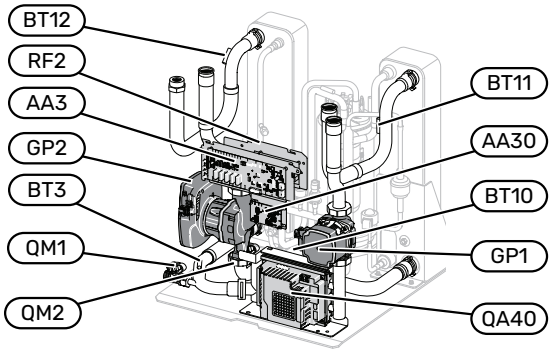

3x400 V 8

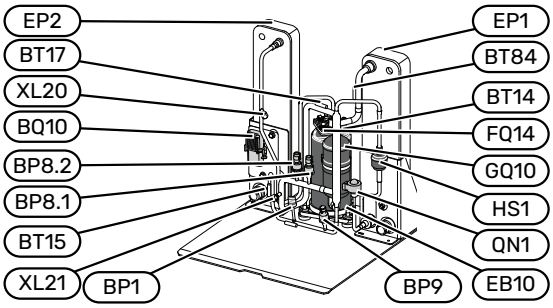

1x230 V 13
3x230 V 13

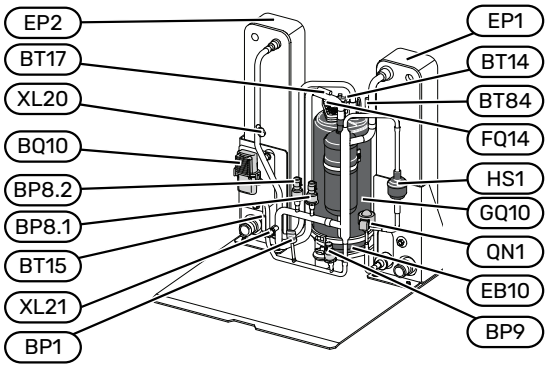

3x400 V 8

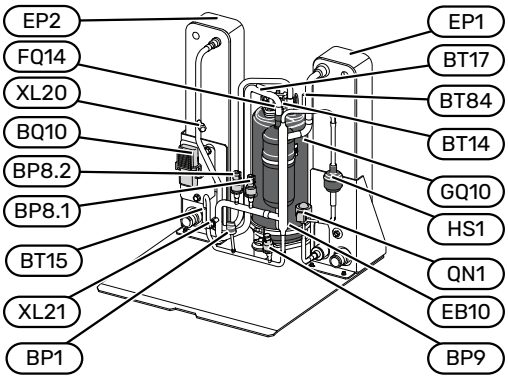

PIPE CONNECTIONS

XL20	Service connection, high pressure
XL21	Service connection, low pressure

HVAC COMPONENTS

GP1	Circulation pump
GP2	Brine pump
QM1	Drainage, climate system
QM2	Draining, brine side

SENSORS ETC.

BP1	High pressure switch
BP8	Low-pressure sensor
BP9	High pressure sensor
BQ10	Refrigerant sensor
BT3	Temperature sensors, heating medium return
BT10	Temperature sensor, brine in
BT11	Temperature sensor, brine out
BT12	Temperature sensor, condenser supply line
BT14	Temperature sensor, hot gas
BT15	Temperature sensor, fluid pipe
BT17	Temperature sensor, suction gas
BT84	Temperature sensor, suction gas evaporator

ELECTRICAL COMPONENTS

AA3	Input circuit board
AA30	Safety board
CA1	Capacitor
EB10	Compressor heater
FQ14	Temperature limiter, compressor
QA40	Inverter
RA1	Choke
RF2	EMC-filter

COOLING COMPONENTS

EP1	Evaporator
EP2	Condenser
GQ10	Compressor
HS1	Drying filter
QN1	Expansion valve

Pipe and air connections

General

Pipe installation must be carried out in accordance with current standards and directives. S1257 can operate with a return temperature of up to 65 °C and a supply line temperature of 70 °C with only the compressor.

NOTE!

Ensure that incoming cold water is clean. When using a private well, it is important to take a water sample. Depending on the water quality, it may be necessary to supplement with an extra water filter.

CAUTION!

The pipe installation has to be flushed clean before the product is connected, to prevent any contaminants from damaging the components. If there is a risk that magnetite may be present, a magnetite filter should be installed.

CAUTION!

Water may drip from the safety valve's overflow pipe. The overflow pipe must be routed to a suitable drain, to prevent hot water splashes from causing harm. The overflow pipe must be inclined along its entire length to prevent pockets where water can accumulate, and must be frost-proof. The overflow pipe must be at least the same size as the safety valve. The overflow pipe must be visible and its mouth must be open and not placed close to electrical components.

CAUTION!

S1257 must be connected to a separate ventilation system that vents the refrigerant outdoors in the event of a leak.

SYMBOL KEY

Symbol	Meaning
	Unit box
	Shut-off valve
	Non-return valve
	Mixing valve
	Circulation pump
	Expansion vessel
	Filterball
	Fan
	Pressure gauge
	Level vessel
	Control valve
	Particle filter
	Safety valve
	Temperature sensor
	Trim valve
	Diverter valve/shunt
	Manual diverter valve/shunt
	Heat exchanger
	Overflow valve
	Heat pump
	Bore hole
	Ground collector
	Heating system
	Heating system with lower temperature
	Cooling system
	Domestic hot water
	Hot water circulation

Symbol	Meaning
	Pool

SYSTEM DIAGRAM

S1257 consists of a cooling circuit, a water heater, an immersion heater, circulation pumps and a control system. S1257 is connected to the brine and climate systems, as well as to hot and cold water.

In the heat pump evaporator, the brine releases its energy to the refrigerant, which is vaporised in order to be compressed in the compressor. The refrigerant, of which the temperature has now been raised, is passed to the condenser where it gives off its energy to the heating medium circuit and, if necessary, to the water heater. If there is a greater need for heating/hot water than the compressor can provide there is an integrated immersion heater.

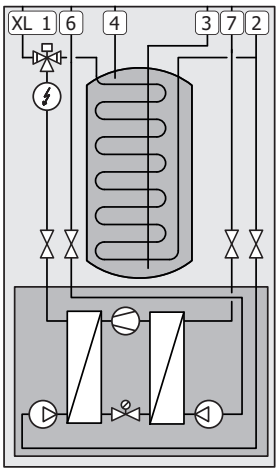

XL1	Connection, heating medium flow
XL2	Connection, heating medium return
XL3	Connection, cold water
XL4	Connection, hot water
XL6	Connection, brine in
XL7	Connection, brine out

Dimensions and pipe connections

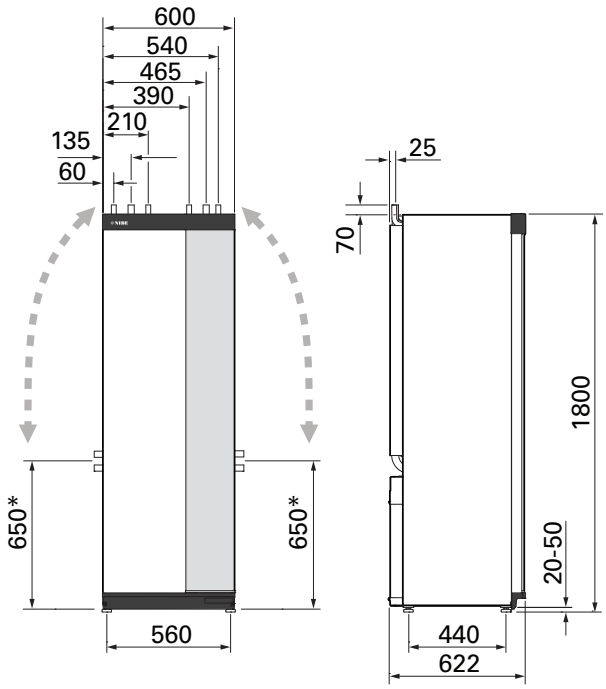

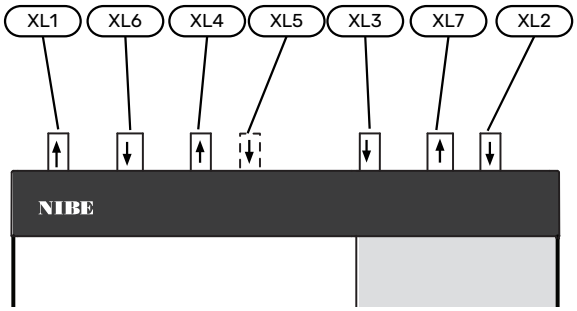

PIPE DIMENSIONS

Connection		8	13
(XL1)/(XL2) Heating medium supply/return ext. ø	(mm)	22	28
(XL3)/(XL4) Cold/hot water ø	(mm)	22	
(XL5) Connection, HWC ø	(mm)	22	
(XL6)/(XL7) Brine in/out ext. ø	(mm)	28	

* Brine in/out (XL6/(XL7) can be angled for side connection.

Brine side

COLLECTOR

NOTE!

The length of the collector hose varies depending on the rock/soil conditions, climate zone and on the climate system (radiators or underfloor heating) and the heating requirement of the building Each installation must be sized individually.

In those cases where it is necessary to have several collectors, these should be connected in parallel with the possibility for adjusting the flow of the relevant coil.

For surface soil heat, the hose should be buried at a depth determined by local conditions and the distance between the hoses should be at least 1 metre.

For several bore holes, the distance between the holes must be determined according to local conditions.

Ensure the collector hose rises constantly towards the heat pump to avoid air pockets.

If the temperature of the brine system may fall below 0 °C, it must be protected against freezing down to -15 °C. When making the volume calculation, 1 litres of ready mixed brine per metre of collector hose (applies when using PEM-hose 40x2.4 PN 6.3) is used as a guide value.

BRINE WITHOUT ANTIFREEZE

To use brine without antifreeze in the system, the DIP switch must be set; for more information, see section "DIP switch".

SIDE CONNECTION

It is possible to angle the brine connections, for connection to the side instead of top connection.

To angle out a connection:

1. Disconnect the pipe at the top connection.
2. Angle the pipe in the desired direction.
3. If necessary, cut the pipe to the desired length.

CONNECTING THE BRINE SIDE

Insulate all indoor brine pipes against condensation.

Mark the brine system with the antifreeze that is used.

Install as follows:

- enclosed level vessel (CM2)/expansion vessel

  Install the level vessel (CM2) as the highest point in the brine system on the incoming pipe before the brine pump. If the level vessel cannot be placed at the highest point, an expansion vessel (CM3) must be used.

  CAUTION!

  Note that condensation may drip from the level vessel. Position the vessel so that this does not harm other equipment.

- enclosed safety valve (FL3)

  The safety valve is fitted below the level vessel.

- pressure gauge

  The pressure gauge is only required if an expansion vessel is used.

- shut-off valve

  Install the shut-off valve as close to S1257 as possible.

- enclosed filterball (QZ2)

  The filterball is installed as close to S1257 as possible and must be accessible for servicing and cleaning.

- vent valve

  When necessary you should install venting valves in the brine system.

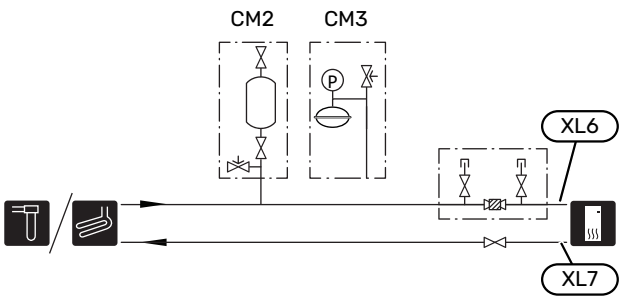

Climate system

A climate system is a system that regulates the indoor temperature with the help of the control system in S1257 and the heating medium circuit's radiators, under floor heating, under floor cooling, fan coils, etc.

CONNECTING THE CLIMATE SYSTEM

Install as follows:

- expansion vessel
- pressure gauge
- pressure relief valve

  Recommended opening pressure is 0.25 MPa (2.5 bar). For information about max opening pressure, see technical specifications.
- enclosed filterball (QZ2)

  The filterball is installed as close to S1257 as possible and must be accessible for servicing and cleaning.
- shut-off valve

  Install the shut-off valve as close to S1257 as possible.
- When connecting to a system with thermostats, either a bypass valve must be fitted or, alternatively, some of the thermostats must be removed to ensure there is sufficient flow and heat emission.

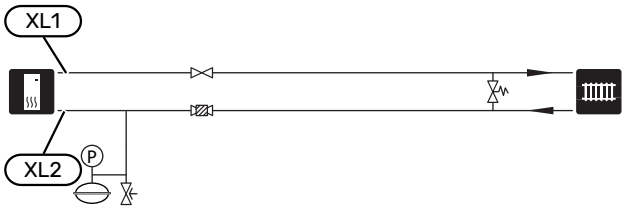

Cold and hot water

The settings for hot water are made in menu 7.1.1 - "Hot water".

CONNECTING COLD AND HOT WATER

Install as follows:

- shut-off valve
- non-return valve
- pressure relief valve

  The safety valve must have an opening pressure of max. 1.0 MPa (10.0 bar).
- mixing valve

  A mixer valve must also be installed, if the factory setting for hot water is changed. National regulations must be observed.

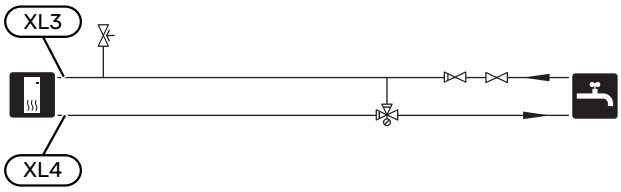

Installation alternative

S1257 can be installed in several different ways, some of which are shown here.

Further option information is available at nibe.eu and in the respective assembly instructions for the accessories used. See page 71 for a list of the accessories that can be used with S1257.

EXTRA HOT WATER HEATERS

The system should be supplemented with an extra water heater/heat pump water heater, if a large bath tub or other significant consumer of hot water is installed.

Water heater with immersion heater

In a water heater with an immersion heater, the water is initially heated by the heat pump. The immersion heater in the water heater is used for keeping warm and when the heat pump does not have sufficient power.

The water heater's flow is connected after S1257.

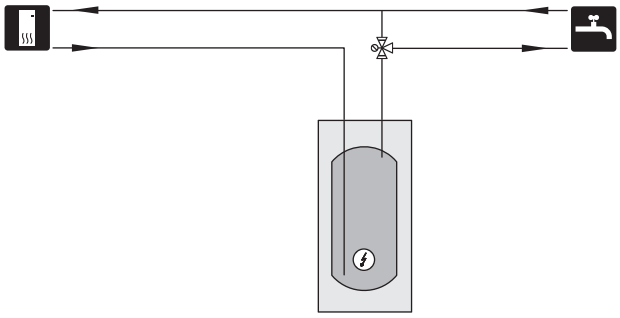

HOT WATER CIRCULATION

A circulation pump can be controlled by S1257 to circulate the hot water. The circulating water must have a temperature that prevents bacterial growth and scalding. National standards must be met.

The HWC return can be connected to XL5 or a freestanding water heater. If an electric water heater is connected after the heat pump, the HWC return must be connected to the water heater.

The circulation pump is activated via the AUX output in menu 7.4 -"Selectable in/outputs".

HWC can be supplemented with a hot water sensor for HWC (BT70) and (BT82), which is connected via the AUX input and activated in menu 7.4 -"Selectable in/outputs".

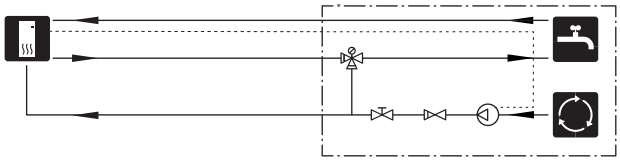

BUFFER VESSEL (UKV)

UKV is an accumulator tank that is suitable for connection to a heat pump or another external heat source, and can have several different applications.
For further information, see the Installer Manual for the accessory.

Volume

2-pipe connected buffer vessel is used to expand the system volume in the climate system for the heat pump.

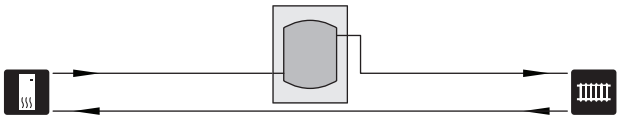

GROUND WATER SYSTEM

An intermediate heat exchanger is used to protect the heat pump's exchanger from dirt. The water is released into a buried infiltration unit or a drilled well. The circuit between the heat pump and the intermediate heat exchanger must be mixed with antifreeze.

See section "Possible selections for AUX output" for more information about connecting a ground water pump.

If the cooling circuit between S1257 and the intermediate heat exchanger is not mixed with antifreeze: go into menu 7.1.12 - "br pmp al set." and change "Alarm temperature" to a suitable value to avoid the heat exchanger freezing.

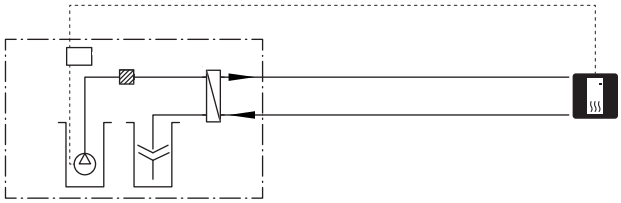

VENTILATION RECOVERY

The installation can be supplemented with the exhaust air module NIBE FLM S45 to provide ventilation recovery.

- Pipes and other cold surfaces must be insulated with diffusion-proof material to prevent condensation.
- The brine system must be supplied with a pressure expansion vessel. If there is a level vessel this should be replaced.

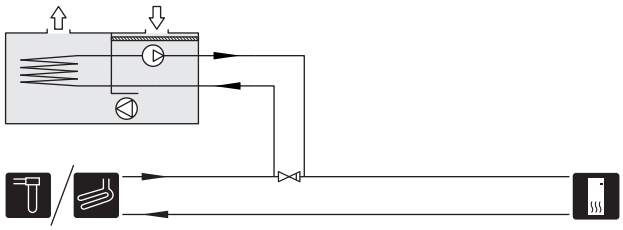

EXTRA CLIMATE SYSTEM

In a property with several climate systems that require different supply temperatures, the accessory ECS 40/ECS 41 can be connected.

A shunt valve then lowers the temperature to the underfloor heating system, for example.

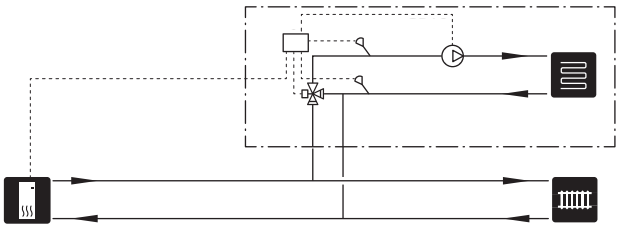

COOLING

The accessory PCS 44 allows the connection of passive cooling, for example with fan coils. The cooling system is connected to the heat pump brine circuit, whereby cooling is supplied from the collector via a circulation pump and shunt valve.

- Pipes and other cold surfaces must be insulated with diffusion-proof material to prevent condensation.
- Where the cooling demand is high, fan convectors with drip trays and drain connection are needed.
- The brine system must be supplied with a pressure expansion vessel. If there is a level vessel this should be replaced.

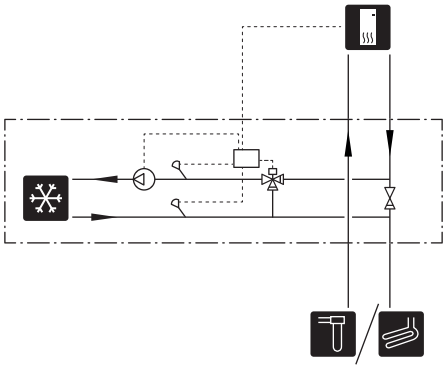

POOL

With the POOL 40 accessory, the pool can be heated with the system.

During pool heating, the heating medium circulates between the S1257 and the pool exchanger using the heat pump's internal heating medium pump.

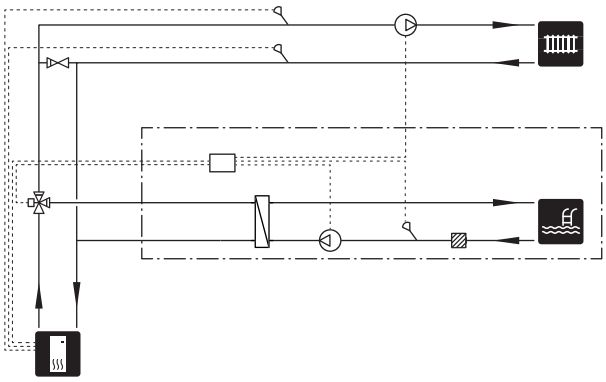

Connection of safety ventilation

S1257 contains a flammable natural refrigerant. In the event of a leak, the evacuation fan (GQ4) starts and vents the refrigerant out through the ventilation duct to the outside of the property. The speed of the evacuation fan is regulated automatically to provide the stipulated flow. The function is tested regularly and scheduled in menu 4.11.7 - "Evacuation fan", when the fan is started and the airflow is measured.

- S1257 must be connected to a separate ventilation system that vents the refrigerant outdoors in the event of a leak.
- The speed of the evacuation fan is regulated automatically.
- The air duct system must have a minimum air tightness class of B (EN 12237).
- The duct for the safety ventilation may be max. 15 m and contain max. 7 90° bends if made with 50 mm internally smooth pipes. Shorter ducts allow more bends. Larger ducts allow a longer duct length and more bends. In addition to duct diameter, length and number of bends, the lifting height is important when it comes to the fan's ability to evacuate a potential refrigerant leak. For more information, see the section "Technical specifications".
- Ensure sufficient air supply to the installation room.
- A duct in a masonry chimney stack must not be used for safety ventilation.

Electrical connections

General

All electrical equipment, except the outdoor sensors, room sensors and the current sensors are ready connected at the factory.

- Electrical installation and wiring must be carried out in accordance with national provisions.
- Disconnect S1257 before insulation testing the house wiring.
- S1257 must be fitted with a RCD (residual current device). A separate residual current device is recommended.
- The RCD must have a nominal tripping current of no more than 30 mA.
- S1257 must be installed via an isolator switch. The cable area has to be dimensioned based on the fuse rating used.
- If a miniature circuit breaker is used, this must have at least triggering characteristic "C". See section "Technical specifications" for fuse size.
- To prevent interference, communication cables to external connections must not be laid in the vicinity of high voltage cables.
- The minimum area of communication and sensor cables to external connections must be 0.5 mm² up to 50 m, for example EKKX, LiYY or equivalent.
- Electrical wiring diagram for S1257, see separate handbook (WHB).
- When routing a cable into S1257, the cable grommets (UB1) and (UB2) must be used.

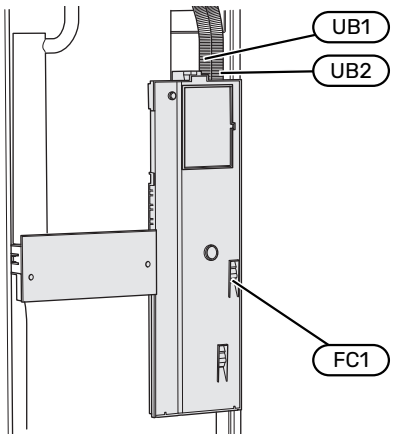

CAUTION!

Electrical installation and any servicing must be carried out under the supervision of a qualified electrician. Turn off the power with the circuit breaker before servicing.

CAUTION!

If the supply cable is damaged, only NIBE, its service representative or similar authorised person may replace it to prevent any danger and damage.

CAUTION!

Check the connections, main voltage and phase voltage before the product is started, to prevent damage to the heat pump electronics.

CAUTION!

Do not start the system before filling up with water. Components in the system could be damaged.

MINIATURE CIRCUIT-BREAKER

The operating circuit in S1257 and some of its internal components are fused internally by a miniature circuit-breaker (FC1).[1]

[1] Only S1257 1x230 V/3x230 V.

ACCESSIBILITY, ELECTRICAL CONNECTION

Removing the cover

The hatch is opened using a screwdriver.

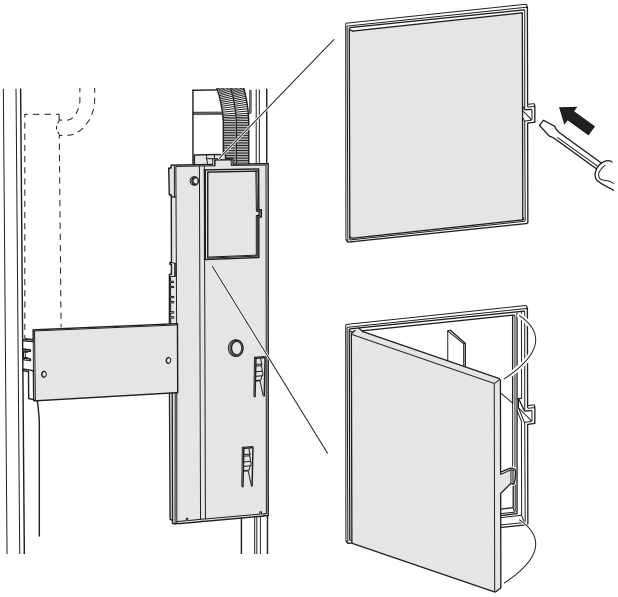

Removing the covers

The cover is opened using a screwdriver.

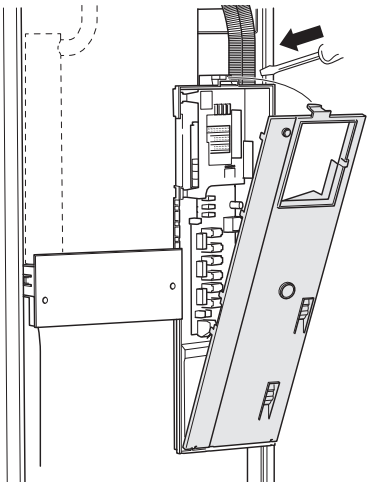

CABLE LOCK

Use a suitable tool to release/lock cables in the heat pump terminal blocks.

Terminal block

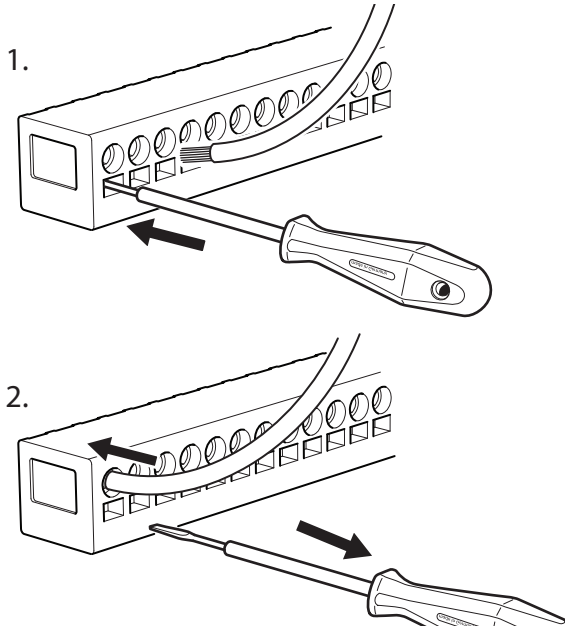

TEMPERATURE LIMITER

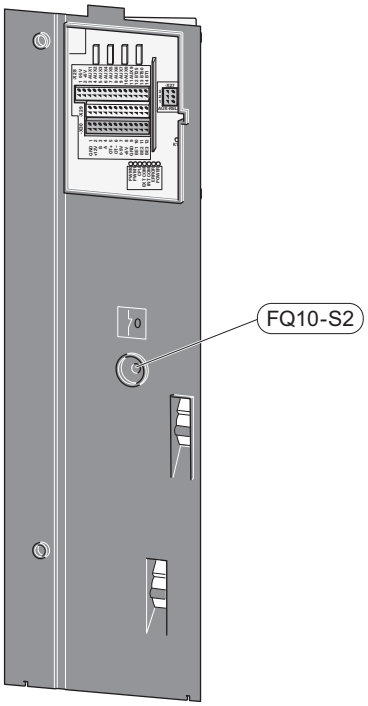

The temperature limiter (FQ10) cuts the voltage to the electric additional heat if the temperature rises above 89 °C and it is reset manually.

Resetting

The temperature limiter (FQ10) is accessed behind the front cover. Reset the temperature limiter by pressing its button (FQ10-S2).

Connections

TERMINAL BLOCKS

The following terminal blocks are used on the base board (AA2).

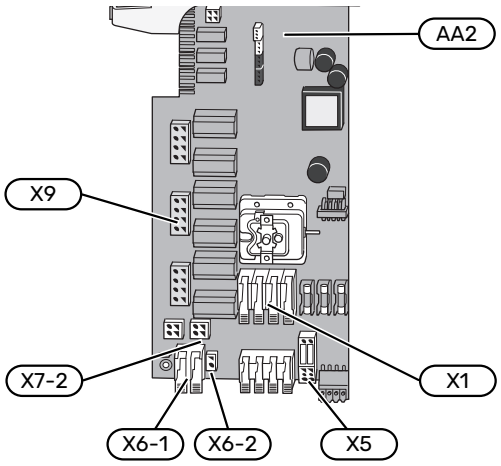

POWER CONNECTION

Supply voltage

Enclosed cable for incoming supply electricity is connected to terminal block X1 and X6-1 on the PCB (AA2).

Connection 1x230 V

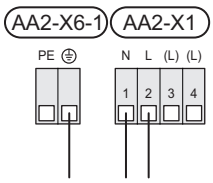

Connection 3x230 V

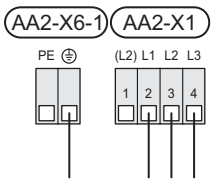

Connection 3x400 V

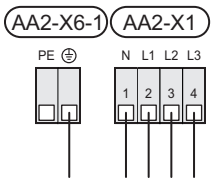

External control voltage for the control system

If the control system is to be powered separately from other components in S1257 (e.g. for tariff control), a separate operating cable is connected.

> **CAUTION!**
>
> During service, all supply circuits must be disconnected.

1. Remove the bridges from terminal block AA2-X5.

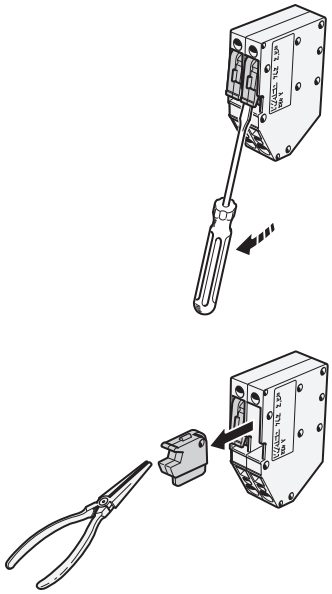

2. Connect control voltage (230 V ~ 50Hz) to AA2-X5:N, AA2-X5:L and AA2-X6-2 (PE).

Enclosed label

The enclosed label is placed on the electrical connection's cover.

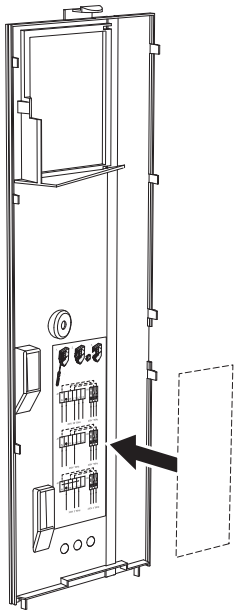

Tariff control

If the voltage to the immersion heater and/or compressor is lost for a period, "Tariff blocking" must be selected at the same time via the selectable inputs, see section "Selectable inputs".

EXTERNAL CONNECTIONS

Connect external connections on terminal blocks X28, X29 and X30 on the base board (AA2).

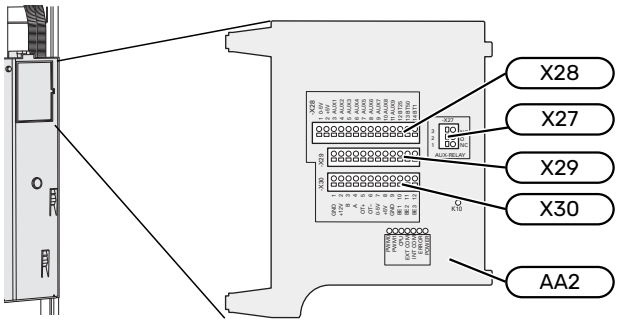

Sensors

Outside sensor

The outdoor temperature sensor (BT1) is placed in the shade on a wall facing north or north-west, so it is unaffected, for example, by the morning sun.

Connect the outdoor temperature sensor to terminal block AA2-X28:14 and AA2-X29:GND.

If a conduit is used it must be sealed to prevent condensation in the sensor capsule.

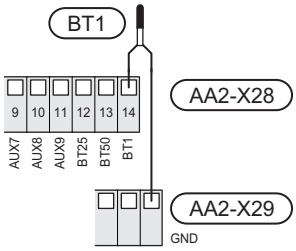

External supply temperature sensor

If an external supply temperature sensor (BT25) needs to be used, connect it to terminal block AA2-X28:12 and to terminal block AA2-X29:GND.

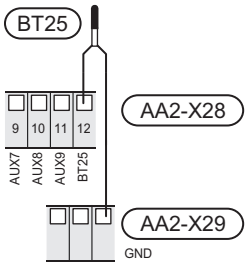

Room sensor

S1257 is supplied with an enclosed room sensor (BT50) that makes it possible to display and control the room temperature in the display on S1257.

S1257 operates without the room sensor, but if you want to read the property's indoor temperature from the display on S1257, the room temperature sensor must be fitted.

The room temperature sensor is installed in a neutral location where the set temperature is required. A suitable location might be, for example, on a free inner wall in a hall approx. 1.5 m above the floor. It is important that the room temperature sensor is not prevented from measuring the correct room temperature, for example by being located in a recess, between shelves, behind a curtain, above or close to a heat source, in a draught from an external door or in direct sunlight. Closed radiator thermostats can also cause problems.

Connect the room temperature sensor to terminal blocks AA2-X28:13 and AA2-X29:GND.

If a room sensor is to be used to change the room temperature in °C and/or to fine-tune the room temperature, the sensor must be activated in menu 1.3 - "Room sensor settings".

If a room sensor is used in a room with underfloor heating, it should only have an indicatory function, not control of the room temperature.

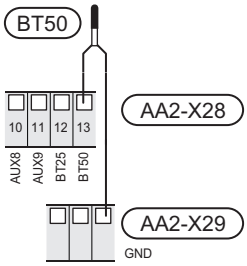

NOTE!

Changes of temperature in the property take a long time. For example, short periods of time combined with under floor heating will not give a noticeable difference in room temperature.

External electricity meter and energy meter

Up to two electricity meters (BE6, BE7) or energy meters for heating (BF2, BF3) can be connected to S1257.

Activate the meter(s) in menu 7.2 - "Accessory settings" and then set the desired value ("Energy per pulse" or "Pulses per kWh") in menu 7.2.19 -"Pulse energy meter".

NOTE!

The EMK accessory is connected to the same terminal blocks as electricity meters/energy meters.

Electricity meter

Connect the electricity meters to terminal blocks AA2-X28:1-2 and AA2-X30:7-8.

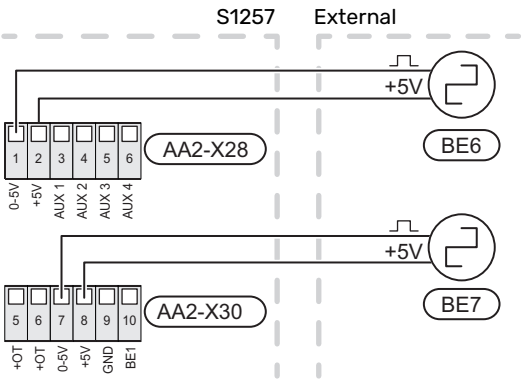

Energy meter

Connect the energy meters to terminal blocks AA2-X28:1-2 and AA2-X30:7-8 and to terminal block AA2-X29:GND.

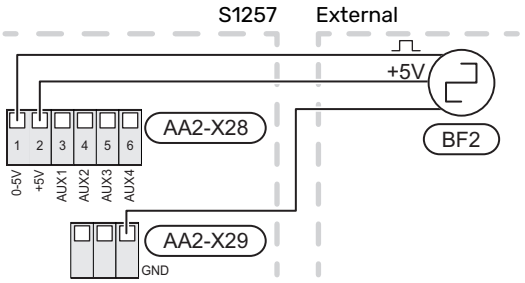

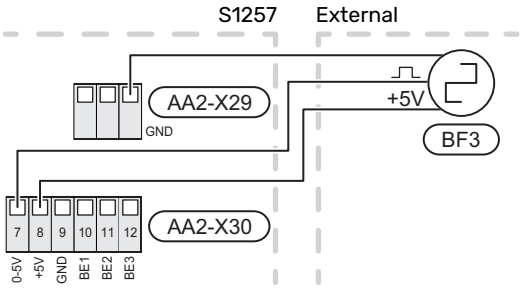

Load monitor

Integrated load monitor

S1257 is equipped with a simple form of integrated load monitor, which limits the power steps for the electric additional heat by calculating whether future power steps can be connected to the relevant phase without exceeding the current for the specified main fuse.

If the current would exceed the specified main fuse, the power step is not permitted. The size of the property's main fuse is specified in menu 7.1.9 - "Load monitor".

Load monitor with current sensor

When many power-consuming products are connected in the property at the same time as the compressor and/or the electric additional heat is operating, there is a risk of the property's main fuses tripping.

S1257 is equipped with a load monitor that, with the help of a current sensor, controls the power steps for the electric additional heat by redistributing the power between the different phases or, alternatively, disengages the electric additional heat step-by-step if there is an overload in a phase.

If the overload remains despite the electric additional heat being disengaged, the compressor is limited.

Reconnection occurs when the other current consumption is reduced.

The building's phases can have different loads. If the compressor has been connected to a heavily loaded phase, there is a risk that the compressor output will be restricted and the electric additional heat will operate longer than expected. This means that the savings will not be as expected.

Connection and activation of current sensors

1. Install a current sensor on each incoming phase conductor into the electrical distribution unit. This is best done in the electrical distribution unit.
2. Connect the current sensors to a multi-core cable in an enclosure directly adjacent to the electrical distribution unit. The multi-core cable between the enclosure and S1257 must have a cable area of at least 0.5 mm².

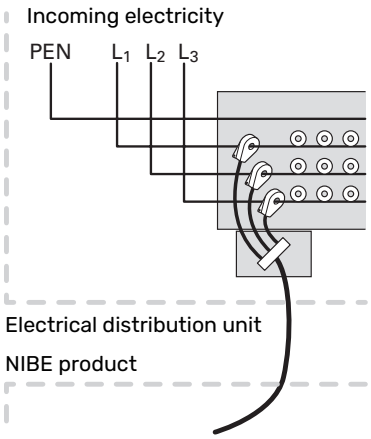

3. Connect the cable to terminal block AA2-X30:9-12, where X30:9 is the common terminal block for the three current sensors.

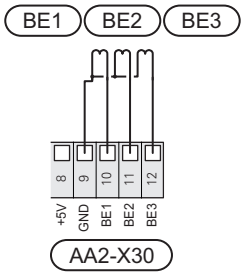

4. Specify the size of the property's main fuse in menu 7.1.9 - "Load monitor".
5. Activate phase detection in menu 7.1.9 - "Load monitor". Read more about phase detection in section "Menu 7.1.9 - Load monitor".

COMMUNICATION

Multi-installation

Several heat pumps can be interconnected by selecting one heat pump as the main unit and the others as subordinate heat pumps.

> **CAUTION!**
> Only ground-source heat pumps without a water heater can be the main unit.

Ground source heat pumps with multi-installation functionality from NIBE can be connected to S1257.

A further eight heat pumps can be connected to the main unit. In systems with several heat pumps, each pump must have a unique name. Only one heat pump can be "Main unit" and only one can be, for example, "Heat pump 5".

Main unit/heat pump are set in menu 7.3.1.

External temperature sensors and control signals must only be connected to the main unit, except for external control of the compressor module.

> **CAUTION!**
> When several heat pumps are connected together, an external supply temperature sensor (BT25) and an external return line sensor (BT71) must be used.

Connect the communication cables between the heat pumps in series to terminal block X30:1 (GND), X30:2 (+12V), X30:3 (B) and X30:4 (A) on the base board (AA2).

The example shows the connection of S1257 as the main unit with two subordinate heat pumps.

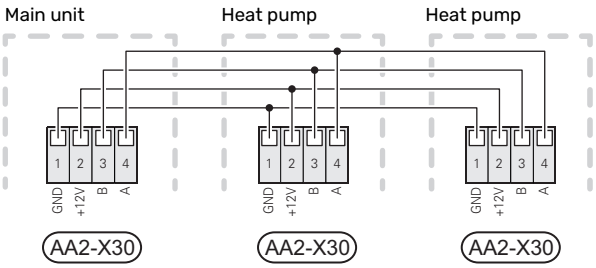

Connecting accessories

Instructions for connecting accessories are provided in the manual accompanying the accessory. See section "Accessories" for a list of the accessories that can be used with S1257. Connection for communication with the most common accessories is shown here.

Accessories with accessory board (AA5)

Accessories with accessory board (AA5) connect to terminal block AA2-X30:1, 3, 4 in S1257.

If several accessories are to be connected, or are already installed, the boards are connected in series.

Because there can be different connections for accessories with accessory board (AA5), you should always read the instructions in the manual for the accessory that is to be installed.

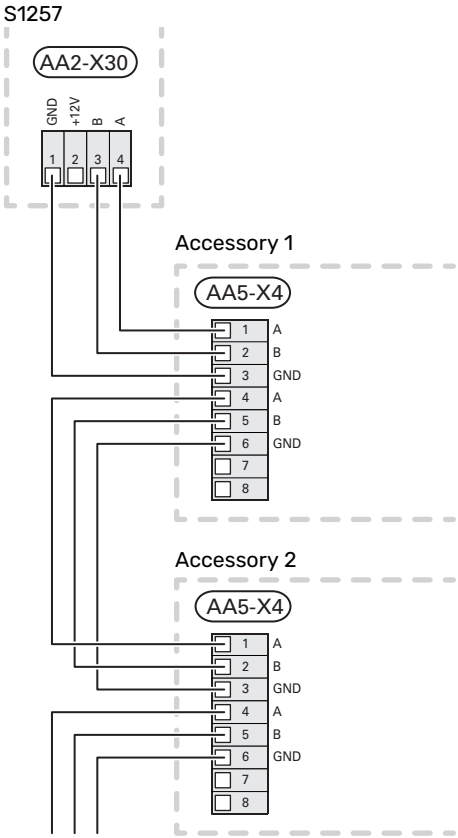

Network cable for myUplink (W130)

In instances when you want to connect to myUplink using a network cable instead of via wifi.

1. Connect the shielded network cable to the display.
2. Route the network cable to the top of S1257.
3. Follow the flow meter's cable out on the right-hand side of S1257.

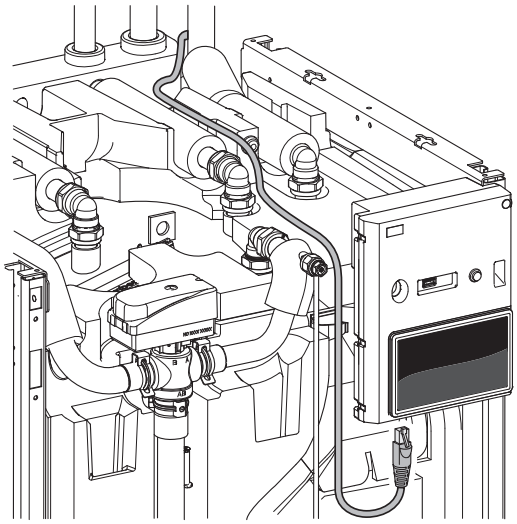

SELECTABLE OUTPUTS/INPUTS

S1257 has software-controlled AUX inputs and outputs for connecting the external switch function (contact has to be potential-free) or sensor.

In menu 7.4 - "Selectable in/outputs", you select the AUX connection to which each function has been connected.

For certain functions, accessories may be required.

> **TIP!**
> Some of the following functions can also be activated and scheduled via menu settings.

Selectable inputs

Selectable inputs on the base board (AA2) for these functions are AA2-X28:3-11. Each function connects to any input and GND (AA2-X29).

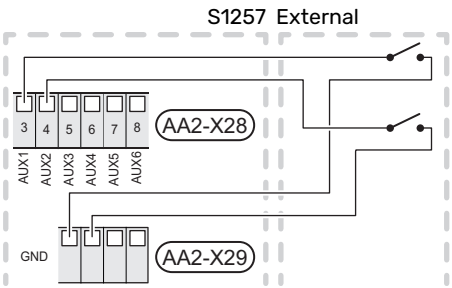

The example above uses the inputs AUX1 (AA2-X28:3) and AUX2 (AA2-X28:4).

Selectable output

A selectable output is AA2-X27.

The output is a potential-free switching relay.

Alarm indication is connected to C-NC, other functions are connected to C-NO.

If S1257 is switched off or in emergency mode, the relay is in C-NC position.

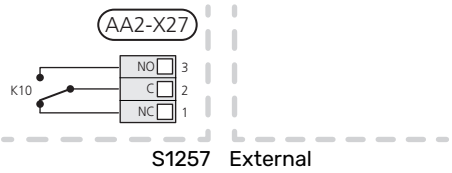

> **NOTE!**
> The relay output may be subjected to a max load of 2 A at resistive load (230 V~).

> **TIP!**
> The AXC accessory is required if more than one function is to be connected to the AUX output.

Possible selection for AUX inputs

Temperature sensor

Available options are:

- 6 dedicated sensors (BT37.1 – BT37.6) for optional placement and naming.
- Cool/ht sensor (BT74), determines when it is time to switch between cooling and heating mode (can be selected when the cooling function is activated in menu 7.2.1 - "Add/remove accessories").
- Ret tmp (BT71)

  (external return line sensor)
- Ext. HW out temp. (BT70) (displayed hot water sensor for HWC. Placed on the supply line.)

  Can be selected when "HW circulation" is activated in menu 7.4 - "Selectable in/outputs".
- Ext. HW recirc. temp. (BT82) (displayed hot water sensor for HWC. Placed on the return line.)

  Can be selected when "HW circulation" is activated in menu 7.4 - "Selectable in/outputs".

Monitor

Available options are:

- External alarm (NO), External alarm (NC)
  The alarm is connected to the control, which means that the malfunction is presented as an information message in the display.
- Press. switch climate syst. (NC)
- level monitor[2] / pressure switch / flow monitor for brine (NC).

External activation of functions

An external switch function can be connected to S1257 to activate various functions. The function is activated during the time the switch is closed.

Possible functions that can be activated:

- Activate brine pump
- Temp. more hot water
- Act. dmnd. mode small
- “External adjustment”

  When the switch is closed, the temperature is changed in °C (if a room sensor is connected and activated). If a room sensor is not connected or not activated, the desired change of "Temperature" ("Offset") is set with the number of steps selected. The value is adjustable between -10 and +10. Setting the value for the change is performed in menu 1.30.3 - "External adjustment".
- activation of one of four fan speeds.

  (Can be selected if ventilation accessory is activated.)

  The following options are available:

[2] Accessory NV 10

- "Activate fan speed 1 (NO)" - "Activate fan speed 4 (NO)"
- “Activate fan speed 1 (NC)”

The fan speed is activated during the time the switch is closed. Normal speed is resumed when the switch is opened again.

- SG Ready

> NOTE!
> "SG Ready" requires two AUX inputs.

In cases where this function is required, it must be connected to terminal block X28 on the base board (AA2).

"SG Ready" is a smart form of tariff control, through which the electricity supplier can affect the indoor, hot water and/or pool temperatures (if applicable) or simply block the additional heating and/or the compressor in the heat pump at certain times of the day (can be selected in menu 4.2.3 after the function has been activated). Activate the function by connecting potential free switch functions to two inputs as selected in menu 7.4 - "Selectable in/outputs" (SG Ready A and SG Ready B).

Closed or open switch means one of the following:

- *Blocking (A: Closed, B: Open)*

  "SG Ready" is active. The compressor in S1257 and additional heat are blocked.

- *Normal mode (A: Open, B: Open)*

  "SG Ready" is not active. No effect on the system.

- *Low price mode (A: Open, B: Closed)*

  "SG Ready" is active. The system focuses on costs savings and can for example exploit a low tariff from the electricity supplier or over-capacity from any own power source (effect on the system can be adjusted in the menu 4.2.3).

- *Overcapacity mode (A: Closed, B: Closed)*

  "SG Ready" is active. The system is permitted to run at full capacity at over capacity (very low price) with the electricity supplier (effect on the system is settable in menu 4.2.3).

(A = SG Ready A. B = SG Ready B)

External blocking of functions

An external switch function can be connected to S1257 for blocking various functions. The switch must be potential-free and a closed switch results in blocking.

> CAUTION!
> Blocking entails a risk of freezing.

Functions that can be blocked:

- Block heating
- Block hot water (any hot water circulation (HWC) remains in operation)
- Block compressor
- Block additional heat
- Tariff blocking (NO), Tariff blocking (NC) (additional heat, compressor, heating, cooling and hot water are disconnected)
- “External power limiting”

  In markets where the mains network operator requires dynamic control of the mains network’s load, the compressor’s and the immersion heater’s operating power can be limited.

  You set the power limit in menu 7.4.2 - "External power limiting".

Possible selections for AUX output

Indications

- Alarm outp.
- SPA (Smart Price Adaption: low electricity price)
- Defr. ambient air collector
- Group alarm
- Cooling mode indication (only applies if there are cooling accessories)
- Cool. mode ind. w delay (only applies if there are cooling accessories)
- Extra cooling (only applies if there are cooling accessories)
- Holiday
- Away mode
- Solar elec AUX (photovoltaic control. Can be selected when the Solar PV accessory is activated.)
- Humidity control (if ventilation accessory and humidity sensor are installed)

Control

- HW circulation (circulation pump for hot water circulation)
- Ext. HM pump (external heating medium pump)
- Groundwater pump, the circulation pump can also be used as an external brine pump (GP7).
- External HW div valve (external diverter valve for hot water)

> CAUTION!
> The relevant distribution box must be marked with a warning about external voltage.

Connecting external circulation pump

An external circulation pump is connected to the AUX output, as illustrated below.

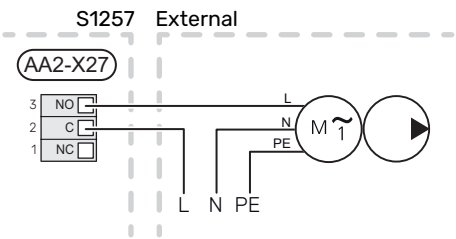

Settings

ELECTRICAL ADDITION - MAXIMUM OUTPUT

The electric additional heat may be restricted depending on the selected country.

The immersion heater's power is set in menu 7.1.5.1 - "Int elec add heat".

Power steps of the immersion heater

The table(s) displays the total phase current for the immersion heater.

In addition to this, there is the current for compressor operation.

3x400 V, S1257-8

Max electrical addition (kW)	Max phase current L1(A)	Max phase current L2(A)	Max phase current L3(A)
0.0	–	–	–
0.5	2.2	–	–
1.0	–	4.3	–
1.5	2.2	4.3	–
2.0	–	–	8.7
2.5	2.2	–	8.7
3.0	–	4.3	8.7
3.5	2.2	4.3	8.7
4.0	–	11.5	7.5
4.5	2.2	11.5	7.5
5.0	–	7.5	15.6
5.5	2.2	7.5	15.6
6.0	–	11.5	15.6
6.5[1]	2.2	11.5	15.6

[1] Factory setting

3x400 V, S1257 -13

Max electrical addition (kW)	Max phase current L1(A)	Max phase current L2(A)	Max phase current L3(A)
0	–	–	–
1	–	–	4.3
2	–	8.7	–
3	–	8.7	4.3
4	–	8.7	8.7
5	–	8.7	13.0
6	8.7	8.7	8.7
7[1]	8.7	8.7	13.0

[1] Factory setting

3x230 V, S1257-8

Max electrical addition (kW)	Max phase current L1(A)	Max phase current L2(A)	Max phase current L3(A)
0.0	–	–	–
0.5	–	2.2	2.2
1.0	–	4.3	4.3
1.5	–	6.5	6.5
2.0	–	8.7	8.7
2.5	–	10.9	10.9
3.0	8.7	4.3	11.5
3.5	8.7	6.5	13.2
4.0	8.7	8.7	15.1
4.5[1]	8.7	10.9	17.0

[1] Factory setting

3x230 V, S1257-13

Max electrical addition (kW)	Max phase current L1(A)	Max phase current L2(A)	Max phase current L3(A)
0	–	–	–
2	–	8.7	8.7
4	8.7	8.7	15.1
6	15.1	15.1	15.1
9[1]	15.1	27.2	27.2

[1] Factory setting

1x230 V S1257-8

Max electrical addition (kW)	Max phase current L1(A)
0.0	–
0.5	2.2
1.0	4.3
1.5	6.5
2.0	8.7
2.5	10.9
3.0	13.0
3.5	15.2
4.0	17.4
4.5[1]	19.6

[1] Factory setting

1x230 V, S1257-13

Max electrical addition (kW)	Max phase current L1(A)
0.0	–
1.0	4.3
2.0	8.7
3.0	13.0
4.0	17.4
5.0	21.7
6.0	26.1
7.0[1]	30.4

[1] Factory setting

Switching to maximum electrical output

If more than the maximum power (7 kW) for the immersion heater connected on delivery is needed, the heat pump can be switched to maximum 9 kW.

Move white cable from terminal block X7-2:N to terminal block X9:L(2) on the base board (AA2).

Current sensor

When the current sensors are connected, S1257 monitors the phase currents and allocates the power steps automatically to the least loaded phase.

> **CAUTION!**
>
> If the current sensors are not connected, S1257 calculates how high the currents will be if the relevant power steps are added. If the currents are higher than the set fuse size, the power step is not allowed to cut in.

EMERGENCY MODE

Emergency mode is used in event of operational interference and in conjunction with service.

When S1257 is put into emergency mode, the system works as follows:

- The compressor is blocked.
- S1257 prioritises heating production.
- Hot water is produced if possible.
- The load monitor is not active.
- Max output for the immersion heater in emergency mode, limited according to the setting in menu 7.1.8.2 - "Emergency mode".
- Fixed supply temperature if the system has no value from the outdoor temperature sensor (BT1).

When the emergency mode is active, the status lamp is yellow.

You can activate the emergency mode both when S1257 is running and when it is switched off.

To activate when S1257 is running: press and hold the on/off button (SF1) for 2 seconds and select "Emergency mode" from the shutdown menu.

To activate emergency mode when S1257 is switched off: press and hold the on/off button (SF1) for 5 seconds. (Deactivate the emergency mode by pressing once).

DIP SWITCH

S1257 is fitted with DIP switch (S1) on the safety board (AA30).

The safety board is located in the cooling module (EP14). For access, see the section "Remove the cooling module front hatch.".

> **CAUTION!**
>
> Only change the DIP switch when S1257 is not powered up.

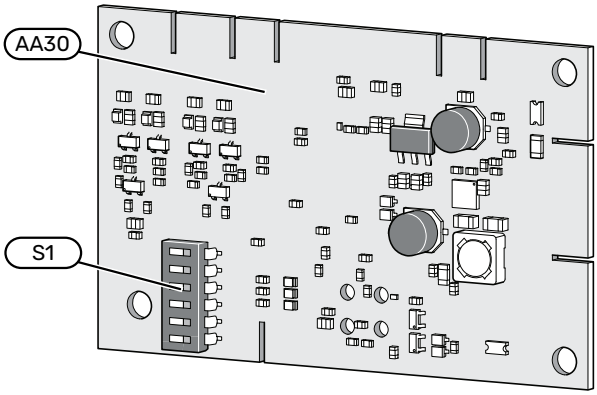

Brine

System with brine without antifreeze:

1. Set the DIP switch (S1).
2. Go to menu 7.1.12 - "Brine settings" to configure the freeze protection for the brine.

Brine without antifreeze

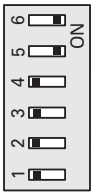

Freeze protected to -15 °C

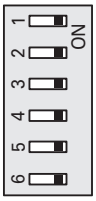

Commissioning and adjusting

Filling and venting

NOTE!
Insufficient venting can damage internal components in S1257.

FILLING THE CLIMATE SYSTEM

1. Open the externally mounted filling valve. Fill the coil in the hot water heater and the rest of the climate system with water.
2. Open the vent valve (QM22).
3. When the water that exits the vent valve (QM22) is not mixed with air, close the valve. After a while, the pressure starts to rise.
4. Close the filling valve when the correct pressure is obtained.

VENTING THE CLIMATE SYSTEM

1. Vent the heat pump via the vent valve (QM22) and the rest of the climate system via its respective vent valves.
2. Keep topping up and venting until all air has been removed and the pressure is correct.

CAUTION!
The pipe from the coil in the container must be drained of water before air can be removed. This means that the system is not necessarily vented, despite the flow of water when the vent valve (QM22) is opened.

FILLING THE HOT WATER HEATER

1. Open a hot water tap in the house.
2. Fill the hot water heater through the cold water connection (XL3).
3. When the water that comes out of the hot water tap is no longer mixed with air, the water heater is full and the tap can be closed.

FILLING THE BRINE SYSTEM

The brine system must be filled with brine consisting of water with or without antifreeze. If antifreeze is used, it is mixed in an open container; the mixture must be protected against freezing down to about -15 °C. Use a connected filling pump to fill with brine.

1. Check the brine system for leakage.
2. Connect the filling pump and return line to the brine system's filling connection (KB25/KB32 accessory).
3. In a system with a level vessel (CM2): close the valve under the level vessel.
4. Fill with brine according to the instructions in the manual for KB25/KB32.
5. In a system with a level vessel: open the valve under the level vessel.

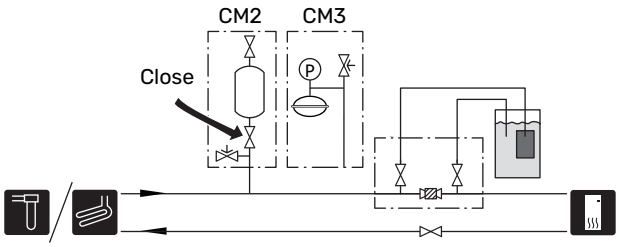

VENTING THE BRINE SYSTEM

Level vessel

Check the fluid level in the level vessel (CM2). If the fluid level has dropped, top up the system.

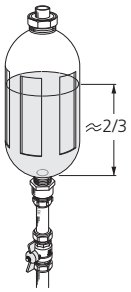

1. Close the valve under the vessel.
2. Disconnect the connection on top of the vessel.
3. Fill with brine until approx. 2/3 of the vessel is filled.
4. Reconnect the connector at the top of the vessel.
5. Open the valve under the vessel.

If the pressure in the system needs to be raised, this is done by closing the valve on the outgoing main line when the brine pump (GP2) is in operation and the level vessel (CM2) is open, so that liquid is drawn down from the vessel.

Expansion vessel

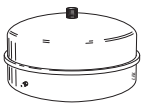

If a pressure expansion vessel (CM3) is used instead of a level vessel, the pressure level is checked with the pressure gauge (BP6). If the pressure drops, the system should be replenished.

Start-up and inspection

CAUTION!
Check that S1257 is connected to a separate ventilation system for the evacuation of any refrigerant leak.

NOTE!
Check the miniature circuit-breaker (FC1)[3]. It may have tripped during transport.

START GUIDE

CAUTION!
There must be water in the climate system before S1257 is started.

CAUTION!
Do not start S1257 if there is a risk that the water in the system has frozen.

CAUTION!
With several heat pumps connected, the start guide must first be run in the subordinate heat pumps.

In the heat pumps that are not the main unit, you can only make settings for each heat pump's circulation pumps. Other settings are made and controlled by the main unit.

1. Start S1257 by pressing the on/off button (SF1).
2. Check the temperature limiter (FQ10). It may have tripped during transport.
3. Check the miniature circuit-breaker (FC1)[1]. It may have tripped during transport.
4. Follow the instructions in the display's start guide. If the start guide does not start when you start the S1257, you can start it manually in menu 7.7.

TIP!
See the section "Control – Introduction" for a more detailed introduction to the installation's control system (operation, menus, etc.).

If the building is cooled when S1257 starts, the compressor may not be able to meet the entire demand without having to use additional heating.

[3] Only S1257 1x230 V/3x230 V.

[1] Only S1257 1x230 V/3x230 V.

Commissioning

The first time the installation is started a start guide is started. The start guide instructions state what needs to carried out at the first start together with a run through of the installation's basic settings.

The start guide ensures that the start-up is carried out correctly and, for this reason, cannot be skipped.

NOTE!
As long as the start guide is active, no function in the installation will start automatically.

Operation in the start guide

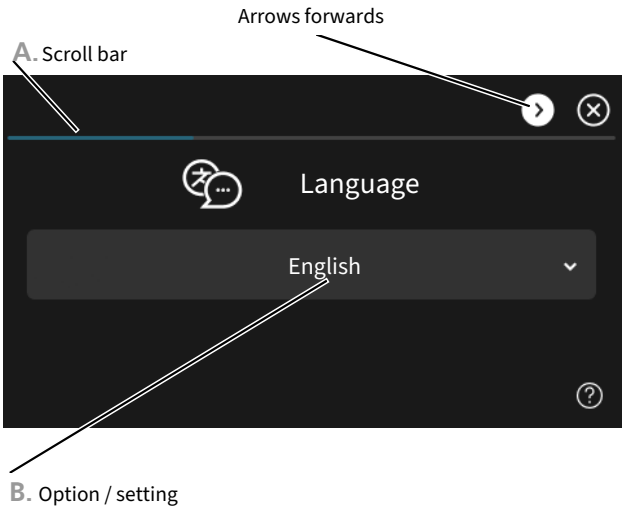

A. Scroll bar

Here you can see how far you have come in the start guide.

Drag to the right or left with your finger to browse between the pages.

You can also press the arrows in the top corners to browse.

B. Option / setting

Make settings for the system here.

SETTING PUMP SPEEDS

Pump adjustment, automatic operation

Brine side

To obtain the nominal or designed flow in the brine system, the brine pump must have the correct setting. S1257 has a brine pump that is controlled automatically in standard mode. Certain functions and accessories may require it to be run manually, in which case the correct speed must be set.

> **TIP!**
> For optimum operation when several heat pumps are installed in a multi-installation, all heat pumps should have the same compressor size.

This automatic control occurs when the compressor is running and sets the speed of the brine pump so that the optimum temperature difference between the brine's inlet and outlet temperatures is attained.

Climate system

To obtain the nominal or designed flow in the climate system, the heating medium pump must have the correct setting. S1257 has a heating medium pump that is controlled automatically in standard mode. Certain functions and accessories may require it to be run manually, in which case the correct speed must be set.

This automatic control takes place when the compressor is running and sets the speed of the heating medium pump, for the relevant operating mode, so the optimum temperature difference between the supply and return lines is obtained. During heating operation, the set DOT (dimensioned outdoor temperature) and temperature difference in menu 7.1.6.2. are used. If necessary, the maximum speed of the circulation pump can be limited in menu 7.1.2.2.

Pump adjustment, manual operation

Brine side

S1257 has a brine pump that can be automatically controlled. For manual operation: deactivate "Auto" in menu 7.1.2.7 and then set the speed according to the diagram below.

> **NOTE!**
> When an accessory for passive cooling is used, the brine pump speed must be set in menu 7.1.2.7

Adjust the flow so that the temperature difference between brine out (BT11) and brine in (BT10) is between 2 - 5 °C. Check these temperatures in menu 3.1 "Operating info" and adjust the brine pump's (GP2) speed until the temperature difference is obtained. A large difference indicates a low brine flow and a small difference indicates a high brine flow.

S1257-8

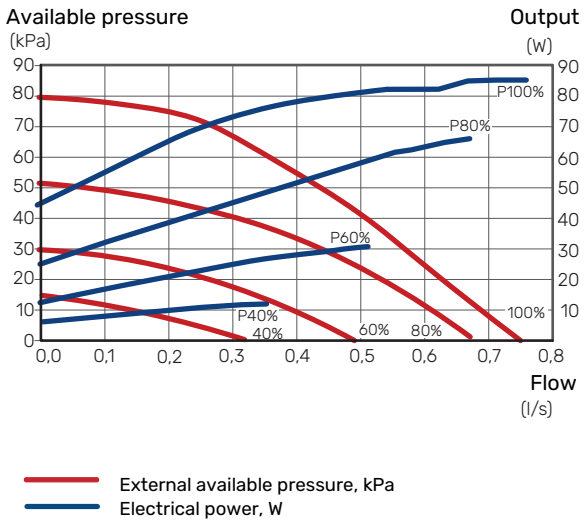

S1257-13

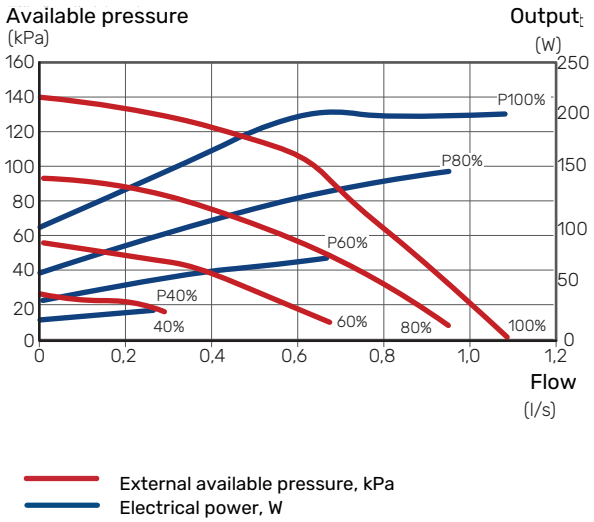

Climate system

S1257 has a heating medium pump that can be controlled automatically. For manual operation, deactivate "Auto" in menu 7.1.2.2 and then set the speed according to the diagram below.

The flow must have a suitable temperature difference for the operating case (heating operation: 5 - 10 °C, hot water generation: 5 - 10 °C, pool heating: approx. 15 °C) between controlling supply temperature sensor and return line sensor. Check these temperatures in menu 3.1 "Operating info" and adjust the heating medium pump (GP1) speed until the temperature difference is attained. A large difference indicates a low heating medium flow and a small difference indicates a high heating medium flow.

S1257-8

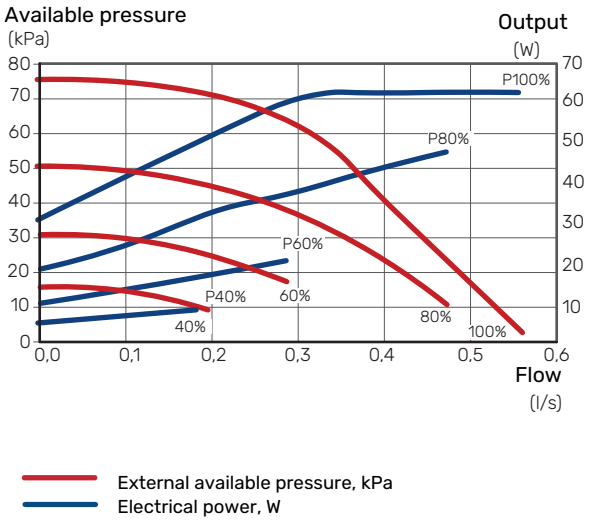

S1257-13

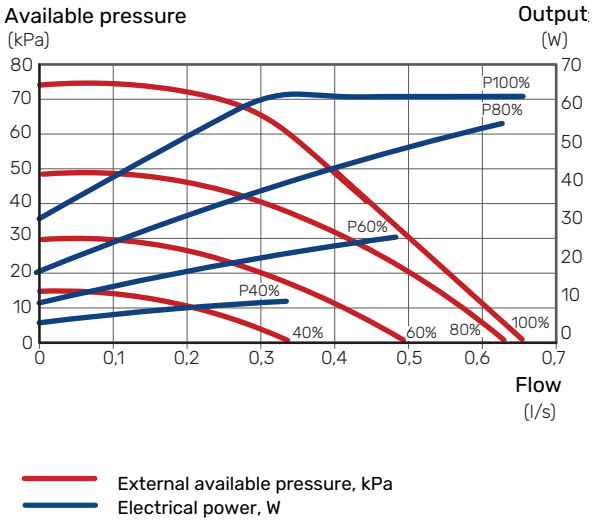

Setting the heating curve

In the menu 1.30.1 -"Curve, heating", you can see the heating curve for the property. The purpose of the curve is to provide an even indoor temperature, regardless of the outdoor temperature, and thereby energy-efficient operation. Based on this curve, S1257 determines the temperature of the water to the climate system (the supply temperature) and thus the indoor temperature.

CURVE COEFFICIENT

The slope of the heating curve indicates how many degrees the supply temperature is to be increased/reduced when the outdoor temperature drops/increases. A steeper slope means a higher supply temperature at a certain outdoor temperature.

The lower the heating curve, the more energy efficient the operation, although an excessively low curve entails reduced comfort.

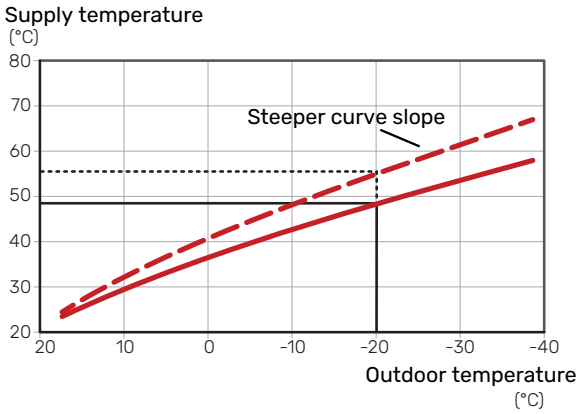

The optimum curve slope depends on the climate conditions in the area and the lowest dimensioned outdoor temperature (DOT), whether the property has radiators, fan coils or under floor heating and how well insulated the property is.

For a property with radiators or fan coils, a higher heating curve (e.g. curve 9) is suitable; for properties with under floor heating, a lower curve (e.g. curve 5) is suitable.

The heating curve is set when the heating installation is installed, but may need adjusting later. Normally, the curve will not need further adjustment.

CURVE OFFSET

An offset of the heating curve means that the supply temperature changes by the same amount for all outdoor temperatures, e.g. a curve offset of +2 steps increases the supply temperature by 5 °C at all outdoor temperatures.

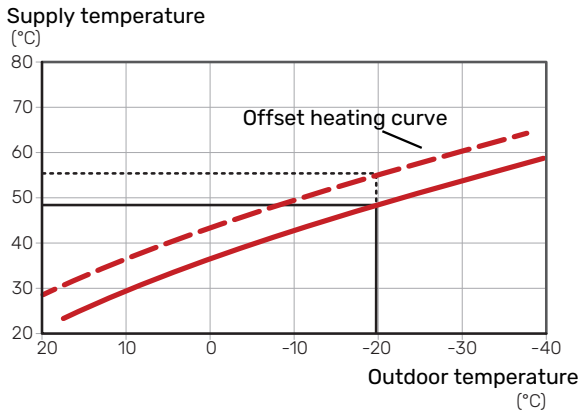

SUPPLY TEMPERATURE – MAXIMUM AND MINIMUM VALUES

Because the supply temperature cannot be calculated higher than the set maximum value or lower than the set minimum value, the curves flatten out at these temperatures.

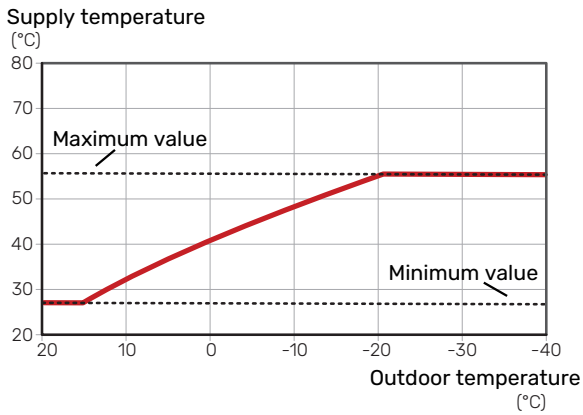

> **NOTE!**
>
> With underfloor heating systems, the maximum supply temperature is normally set between 35 and 45 °C.

> **NOTE!**
>
> With under floor cooling, the lowest supply temperature must be restricted to prevent condensation.
>
> This is set in menu 1.30.5 - "Lowest supply cooling".

ADJUSTMENT OF CURVE

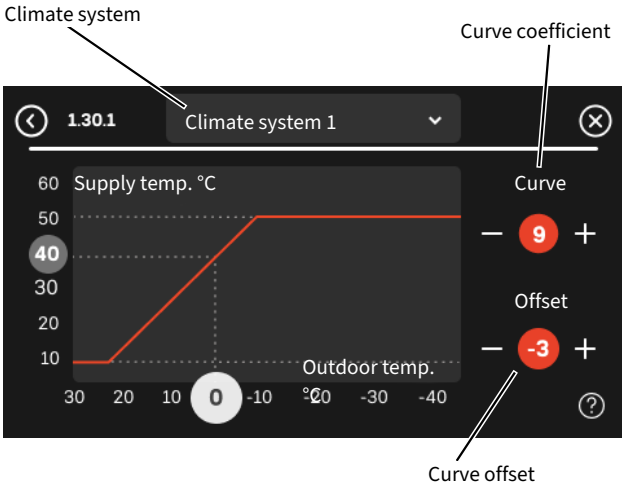

1. Select the climate system (if more than one) for which the curve is to be changed.
2. Select curve slope and curve offset.
3. Select max and min supply temperature.

> **NOTE!**
>
> Curve 0 means that "Own curve" is used.
>
> Settings for "Own curve" are made in menu 1.30.7.

TO READ OFF A HEATING CURVE

1. Drag in the circle on the axis with outdoor temperature.
2. Read off the value for supply temperature in the circle on the other axis.

myUplink

With myUplink you can control the installation – where and when you want. In the event of any malfunction, you receive an alarm directly to your e-mail or a push notification to the myUplink app, which allows you to take prompt action.

The possibility to view the history and to make changes depends on the myUplink subscription. You can always view and subscribe on the myUplink website.

Visit myuplink.com for more information.

Specification

You need the following in order for myUplink to be able to communicate with S1257:

- wireless network or network cable
- Internet connection
- account on myuplink.com

We recommend our mobile apps for myUplink.

Connection

When you log in for the first time, you must connect the installation. This can be done with the QR code or with a connection string.

CONNECTION WITH QR CODE

1. Scan the QR code in menu 5.1 - "myUplink".
2. Follow the instructions in the myUplink app.

CONNECTION WITH CONNECTION STRING

1. Select connection type (wifi/Ethernet) in menu 5.2.1 or 5.2.2.
2. In menu 5.1 you select "Request new connection string".
3. When a connection string has been produced, it is shown in this menu and is valid for 60 minutes.
4. If you do not already have an account, register in the mobile app or on myuplink.com.
5. Use the connection string to connect the system to your user account on myUplink.

myUplink PRO

myUplink PRO is a complete tool for offering service agreements to the end customer and for always having the latest information about the installation, as well as the option to adjust settings remotely.

With myUplink PRO, you can provide your connected customers with rapid status and remote diagnostics.

Visit pro.myuplink.com for information about what else you can do using the mobile app and online.

API

In addition to myUplink and myUplink PRO, there is also an open API based on the HTTP specification. This API is a RESTful API that communicates over JSON.

The availability of parameters and data points depends on the myUplink subscription and the myUplink service.

Visit dev.myuplink.com to get started and obtain more information.

Control - Introduction

Display unit

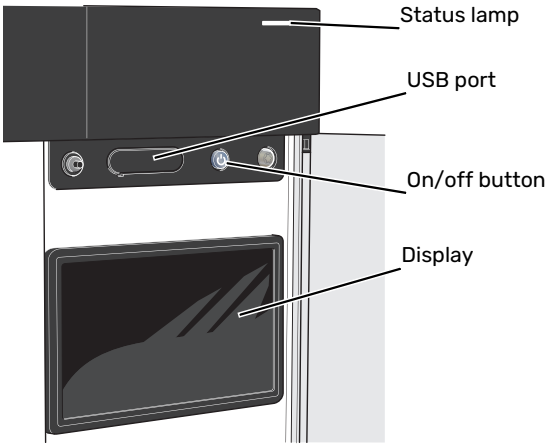

THE STATUS LAMP

The status lamp indicates current operating status. It:

- lights up white during normal operation.
- lights yellow in emergency mode.
- lights red in the event of a deployed alarm.
- flashes white during active notice.
- is blue when S1257 is switched off.

If the status lamp is red, you receive information and suggestions for suitable actions on the display.

> TIP!
>
> You also receive this information via myUplink.

THE USB PORT

Above the display, there is a USB port that can be used e.g. for updating the software. Log in to myuplink.com and click the "General" tab and then "Software" to download the latest software version for your installation.

> TIP!
>
> If you connect the product to myUplink, you can update the software without using the USB port. See section "myUplink".

THE ON/OFF BUTTON

The on/off button (SF1) has three functions:

- start
- switch off
- activate emergency mode

To start: press the on/off button once.

To switch off, restart or activate emergency mode: press and hold the on/off button for 2 seconds. This brings up a menu with various options.

For hard switch off: press and hold the on/off button for 10 seconds.

To activate emergency mode when S1257 is switched off: press and hold the on/off button (SF1) for 5 seconds. (Deactivate the emergency mode by pressing once).

THE DISPLAY

Instructions, settings and operational information are shown on the display.

Navigation

S1257 has a touchscreen where you simply navigate by pressing and dragging with your finger.

SELECT

Most options and functions are activated by lightly pressing on the display with your finger.

BROWSE

The symbols at the bottom edge show if there are more pages.

Drag to the right or left with your finger to browse between the pages.

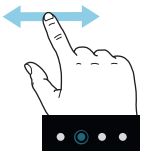

SCROLL

If the menu has several sub-menus, you can see more information by dragging up or down with your finger.

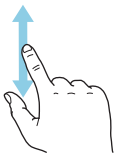

CHANGE A SETTING

Press the setting you want to change.

If it is an on/off setting, it changes as soon as you press it.

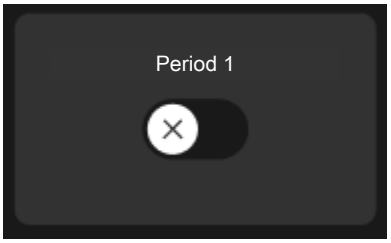

If there are several possible values, a spinning-wheel appears that you drag up or down to find the desired value.

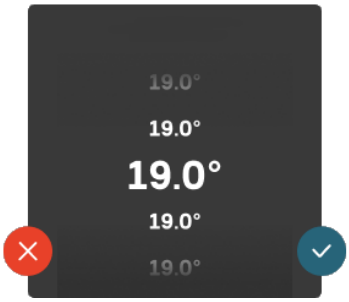

Press to save your change, or if you don't want to make a change.

FACTORY SETTING

Factory set values are marked with *.

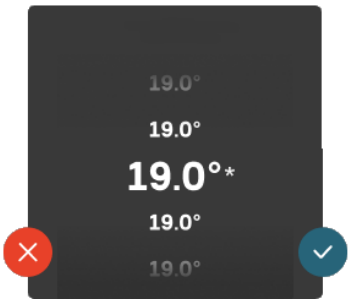

HELP MENU

In many menus there is a symbol that indicates that extra help is available.

Press the symbol to open the help text.

You may need to drag with your finger to see all text.

Menu types

HOME SCREENS

Smartguide

Smartguide helps you both to view information about the current status and to make the most common settings easily. The information that you see depends on the product you have and the accessories that are connected to the product.

Select an option and press it to proceed. The instructions on the screen help you to choose correctly or give you information about what is happening.

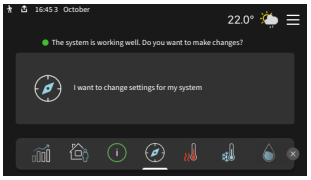

Function pages

On the function pages, you can both view information about the current status and easily make the most common settings. The function pages that you see depend on the product you have and the accessories that are connected to the product.

Drag to the right or left with your finger to browse between the function pages.

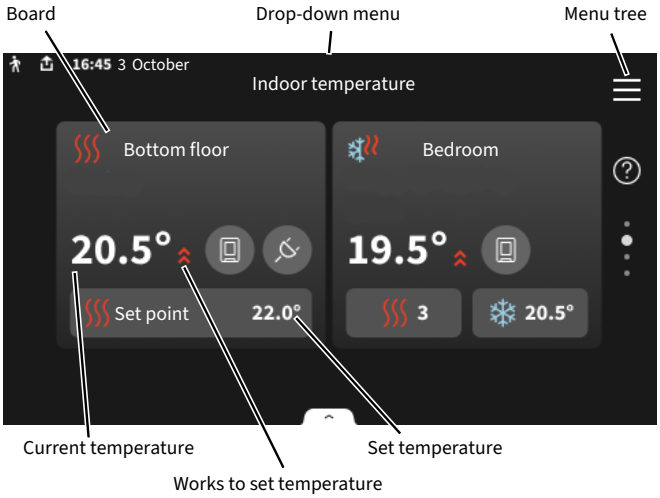

Press the card to adjust the desired value. On certain function pages, drag your finger up or down to obtain more cards.

Product overview

It can be a good idea to have the product overview open during any service cases. You can find it among the function pages.

Here, you can find information about the product name, the product's serial number, the version of the software and contact details for the company that is supplying service. When a software update is available, you can start the update here (provided that S1257 is connected to myUplink).

> **TIP!**
> You enter the service details in menu 4.11.1.

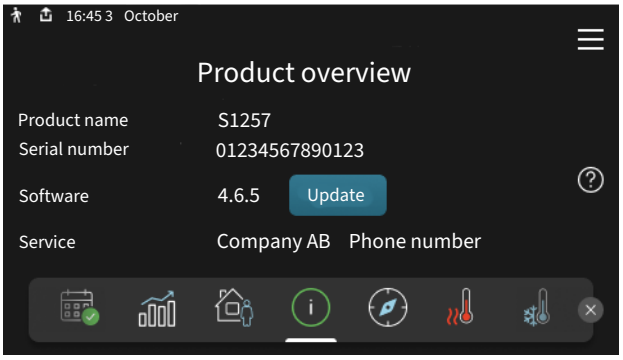

Drop-down menu

From the home screens, you reach a new window containing further information by dragging down a drop-down menu.

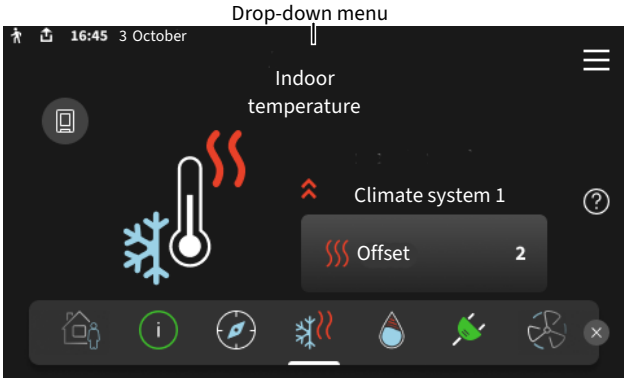

The drop-down menu shows the current status for S1257, what is in operation and what S1257 is doing at the moment. The functions that are in operation are highlighted with a frame.

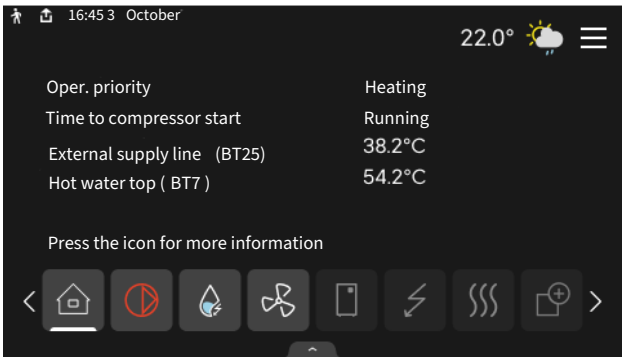

Press the icons on the menu's lower edge for more information about each function. Use the scroll bar to view all information for the selected function.

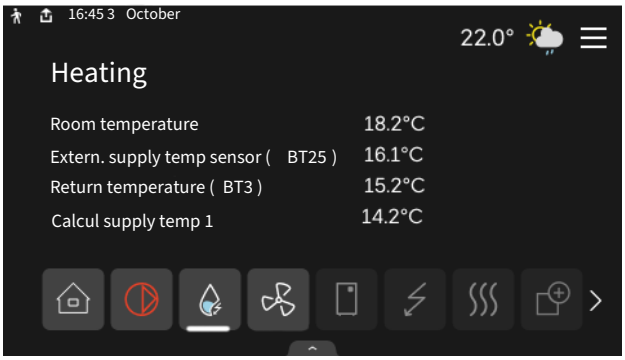

MENU TREE

In the menu tree, you can find all menus and can make more advanced settings.

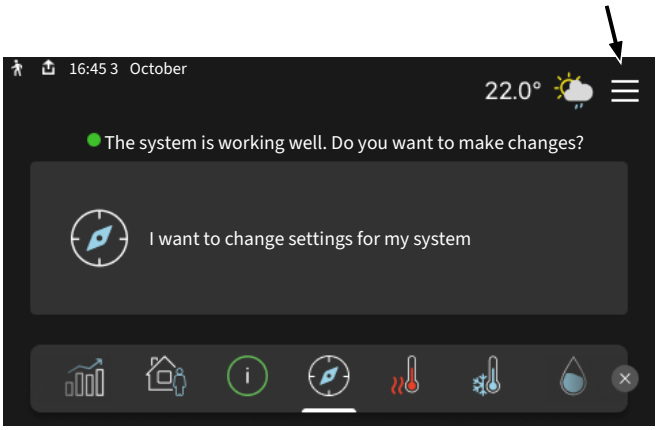

You can always press "X" to return to the home screens.

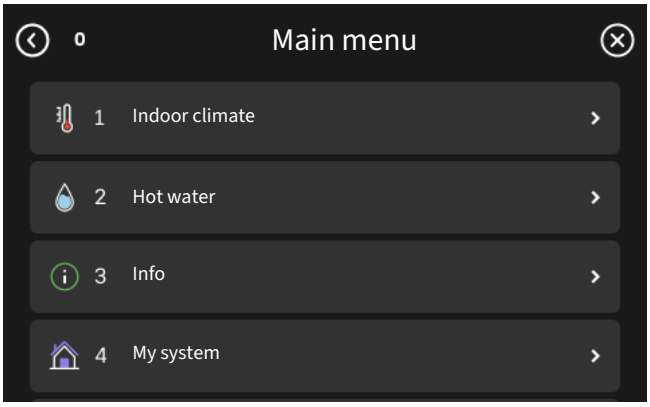

Climate systems and zones

Climate systems can be divided into multiple zones. A zone can be a specific room, and it is also possible to divide a large room into several zones, with the help of radiator thermostats.

Each zone can contain one or more accessories, e.g. room sensors or thermostats, both wired and wireless.

A zone can be set with or without the influence of the climate system's supply temperature.

OUTLINE DIAGRAM WITH TWO CLIMATE SYSTEMS AND FOUR ZONES

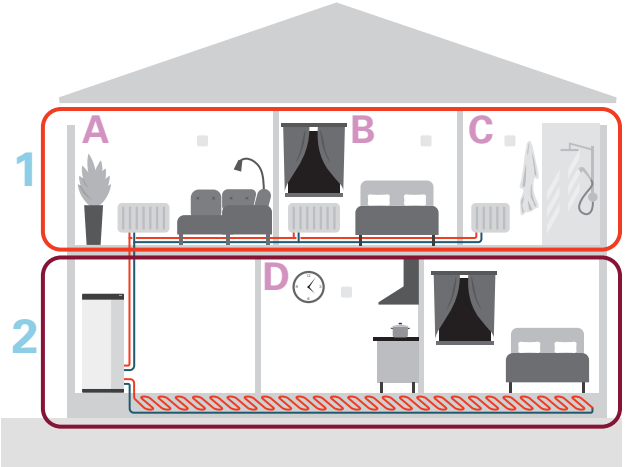

This example shows a property with two climate systems (1 and 2, two separate floors) divided into four zones (A-D, four different rooms). The temperature can be controlled individually in each zone (accessory required).

Update the software

There are several ways to update the software for S1257. It is possible to do this via:

- myUplink and myUplink PRO
- home screen
- menu 5.10 - "Direct connection" with the myUplink PRO account
- The USB port

Control - Menus

In multi-installations with several heat pumps, some menus are also visible in the display on the heat pumps that are not the main unit.

Menu 1 - Indoor climate

OVERVIEW

1.1 - Temperature	1.1.1 - Indoor temperature
	1.1.3 - Humidity [1]
1.2 - Ventilation [1]	1.2.1 - Fan speed [1]
	1.2.2 - Night cooling [1]
	1.2.3 - FLM cooling [1]
	1.2.4 - Demand controlled ventilation [1]
	1.2.5 - Fan return time [1]
	1.2.6 - Filter replacement interval [1]
	1.2.7 - Ventilation recovery [1]
1.3 - Room sensor settings	1.3.3 - Room sensor settings
	1.3.4 - Zones
	1.3.30 - Unassigned units
1.4 - External influence	
1.5 - Climate system name	
1.30 - Advanced	1.30.1 - Curve, heating
	1.30.2 - Curve, cooling [1]
	1.30.3 - External adjustment
	1.30.4 - Lowest supply heating
	1.30.5 - Lowest supply cooling [1]
	1.30.6 - Highest supply heat
	1.30.7 - Own curve
	1.30.8 - Point offset

[1] Consult the accessory's Installer Manual.

MENU 1.1 - TEMPERATURE

Here, you make temperature settings for your installation's climate system.

If there is more than one zone and/or climate system, the settings are made for each zone/system.

MENU 1.1.1 - INDOOR TEMPERATURE

Set the temperature (with room sensor installed and activated):

Setting range: 5 – 35°C

The value in the display appears as a temperature in °C, if the zone is controlled by a room sensor.

NOTE!

A slow climate system, such as underfloor heating, may be unsuitable for controlling with room sensors.

Setting the temperature (without room sensors activated):

Setting range: -10 – 10

The display shows the set value for heating (curve offset). To increase or reduce the indoor temperature, increase or reduce the value in the display.

The number of steps the value has to be changed in order to achieve a one degree change to the indoor temperature depends on the property's climate system. One step is usually enough, but in some cases several steps may be required.

If multiple zones in a climate system do not have activated room sensors, these will have the same curve offset.

Set the desired value. The new value is shown on the right-hand side of the symbol on the home screen, indoor temperature.

NOTE!

An increase in the room temperature can be slowed by the thermostats for the radiators or under floor heating. Therefore, open the thermostats fully, except in those rooms where a cooler temperature is required, e.g. bedrooms.

TIP!

If the room temperature is constantly too low/high, you increase/decrease the value on the indoor temperature home screen.

If the room temperature changes when the outdoor temperature changes, you increase/decrease the curve slope by one step in menu 1.30.1.

Wait 24 hours before making a new setting, so that the room temperature has time to stabilise.

MENU 1.3 - ROOM SENSOR SETTINGS

Here you configure settings for room sensors and zones. The room sensors are grouped by zone.

MENU 1.3.3 - ROOM SENSOR SETTINGS

Here you select which zone a sensor should belong to. It is possible to connect several room sensors to each zone. If multiple room sensors are used in the same zone, their average temperature is calculated and used as the controlling temperature. Each room sensor can be given a unique name.

The control of heating and cooling is activated by ticking the relevant option. Which options are shown depends on which type of sensor is installed. If control is not activated, the sensor will be the displaying sensor.

Smart Room Comfort is activated when heating is selected as the controlling option. A zone is regulated based on the weather forecast and the indoor temperature.

NOTE!

A slow heating system such as underfloor heating may be inappropriate for controlling with room sensors.

If there is more than one zone and/or climate system, the settings are made for each zone/system.

MENU 1.3.4 - ZONES

Here, you add and name zones. You also select the climate system to which a zone is to belong.

MENU 1.3.30 - UNASSIGNED UNITS

All units that are not connected to a zone are listed here.

MENU 1.4 - EXTERNAL INFLUENCE

Information for the accessories/functions that can affect the indoor climate and that are active is shown here.

MENU 1.5 - CLIMATE SYSTEM NAME

You can give the installation's climate system a name here.

MENU 1.30 - ADVANCED

Menu "*Advanced*" is intended for the advanced user. This menu has several sub-menus.

"*Curve, heating*" Setting the heating curve slope.

"*External adjustment*" Setting the heating curve offset when the external contact is connected.

"*Lowest supply heating*" Setting minimum permitted supply temperature during heating operation.

"*Highest supply heat*" Setting maximum permitted supply temperature for the climate system.

"*Own curve*" Here, you can create your own heating curve, if there are special requirements, by setting the desired supply temperatures for different outdoor temperatures.

"*Point offset*" Select a change in the heating curve at a certain outdoor temperature here. One step is usually enough to change the room temperature by one degree, but in some cases several steps may be required.

MENU 1.30.1 - CURVE, HEATING

Curve, heating
Setting range: 0 – 15

The heating curve can be found in this menu. The task of the heating curve is to provide a uniform indoor temperature, regardless of the outdoor temperature. It is from the heating curve that S1257 determines the temperature of the water to the climate system, the supply temperature, and therefore the indoor temperature.

For a property with radiators or fan coils, a higher heating curve (e.g. curve 9) is suitable; for properties with under floor heating, a lower curve (e.g. curve 5) is suitable.

When you have selected the heating curve, you can read off how the supply temperature will change at different outdoor temperatures.

TIP!

It is also possible to create your own curve. This is done in menu 1.30.7.

NOTE!

With underfloor heating systems, the maximum supply temperature is normally set between 35 and 45 °C.

TIP!

If the room temperature is constantly too low/high, you increase/decrease the curve offset by one step.

If the room temperature changes when the outdoor temperature changes, you increase/decrease the curve slope by one step.

Wait 24 hours before making a new setting, so that the room temperature has time to stabilise.

MENU 1.30.3 - EXTERNAL ADJUSTMENT

External adjustment
Setting range: -10 – 10

Setting range (if room sensor is installed): 5 – 30 °C

Connecting an external switch, for example a room thermostat or a timer, allows you to raise or lower the room temperature temporarily or periodically. When the switch is on, the heating curve offset is changed by the number of steps selected in the menu. If a room sensor is installed and activated, the desired room temperature (°C) is set.

If there is more than one zone, the setting can be made separately for each zone.

MENU 1.30.4 - LOWEST SUPPLY HEATING

Climate system
Setting range: 5 – 80 °C

Here, you set the lowest supply temperature for the climate system. This means that S1257 never calculates a temperature lower than that set here.

If there is more than one climate system the setting can be made separately for each system.

MENU 1.30.6 - HIGHEST SUPPLY HEAT

Climate system
Setting range: 5 – 80 °C

Here, you set the highest supply temperature for the climate system. This means that S1257 never calculates a temperature higher than the one set here.

If there is more than one climate system the setting can be made separately for each system. Climate systems 2 – 8 cannot be set to a higher max supply temperature than climate system 1.

NOTE!

With underfloor heating systems, "Maximum supply temperature for heating" should normally be set between 35 and 45°C.

MENU 1.30.7 - OWN CURVE

Own curve, heat

Supply temp
Setting range: 5 – 80 °C

NOTE!

Curve 0 must be selected for own curve to apply.

Here, you can create your own heating curve, if there are special requirements, by setting the desired supply temperatures for different outdoor temperatures.

MENU 1.30.8 - POINT OFFSET

Outdoor temp. point
Setting range: -40 – 30 °C

Change in curve
Setting range: -10 – 10 °C

Select a change in the heating curve at a certain outdoor temperature here. One step is usually enough to change the room temperature by one degree, but in some cases several steps may be required.

The heating curve is affected at ± 5°C from set outdoor temp. point.

It is important that the correct heating curve is selected so that the room temperature is experienced as even.

TIP!

If it feels cold in the property at e.g. -2 °C, "outdoor temp. point" is set to "-2" and "change in curve" is increased until the desired room temperature is maintained.

NOTE!

Wait 24 hours before making a new setting, so that the room temperature has time to stabilise.

Menu 2 - Hot water

OVERVIEW

2.1 - More hot water
2.2 - Hot water demand
2.3 - External influence
2.4 - Periodic increase
2.5 - Hot water circulation

MENU 2.1 - MORE HOT WATER

More hot water
Alternatives: 3, 6, 12, 24 and 48 hours, and modes "Off" and "One-time incr."

Quick start with imm. heater
Alternative: on/off

"More hot water": When there is a temporary increase in hot water demand, this menu can be used to select an increase in the hot water temperature for a selectable time.

If the hot water temperature is already sufficiently high, "One-time incr." cannot be activated.

The function is activated directly when a time period is selected. The remaining time for the selected setting is shown to the right.

When the time has run out, S1257 returns to the set demand mode.

Select "Off" to switch off "More hot water".

"Quick start with imm. heater": Gives faster heating, but can lead to increased energy consumption.

MENU 2.2 - HOT WATER DEMAND

Options: Small, Medium, Large, Smart control

The difference between the selectable modes is the temperature of the hot tap water. Higher temperature means that the hot water lasts longer.

"Small": This mode produces less hot water at a lower temperature than the other alternatives. This mode can be used in smaller households with a small hot water demand.

"Medium": Normal mode produces a larger amount of hot water and is suitable for most households.

"Large": This mode produces the greatest quantity of hot water at a higher temperature than the other alternatives. In this mode, the immersion heater may be used to partially heat the hot water. In this mode, hot water production is prioritised ahead of heating.

"Smart control": With Smart control activated, S1257 continuously learns from previous hot water consumption and, in this way, adjusts the temperature in the water heater for reduced energy consumption and maximum comfort.

MENU2.3 - EXTERNAL INFLUENCE

Information for the accessories/functions that can affect the hot water operation is shown here.

MENU 2.4 - PERIODIC INCREASE

Activated
Alternative: on/off

Period
Setting range: 1 - 90 days

Start time
Setting range: 00:00 - 23:59

Next increase
The date when the next periodic increase will occur is shown here.

To prevent bacterial growth in the water heater, the heat pump and the immersion heater can increase the hot water temperature once at regular intervals.

The time for the one-time increase is proposed at random, based on the serial number, to address the risk of many heat pumps locally happening to run the increase in parallel if they have been installed at the same time.

Here, you can select the length of time between increases in the hot water temperature. The time can be set between 1 and 90 days. Tick/untick "Activated" to start/switch off the function.

MENU 2.5 - HOT WATER CIRCULATION

Operating time
Setting range: 1 – 60 min

Downtime
Setting range: 0 – 60 min

Period

Active days
Alternatives: Monday – Sunday

Start time
Setting range: 00:00 – 23:59

Stop time
Setting range: 00:00 – 23:59

Set hot water circulation for up to five periods per day here. During the set periods, the hot water circulation pump will run according to the settings above.

"Operating time" determines how long the hot water circulation pump will run per operating instance.

"Downtime" determines how long the hot water circulation pump will be stationary between operating instances.

"Period": Here, you set the time period during which the hot water circulation pump will run, by selecting "Active days", "Start time" and "Stop time".

> **CAUTION!**
>
> Hot water circulation is activated in menu 7.4 "Selectable in/outputs" or via accessory.

Menu 3 - Info

OVERVIEW

3.1 - Operating info[1]	
3.2 - Temperature log	
3.3 - Energy and power log	3.3.1 - Energy log
	3.3.2 - Power log
3.4 - Alarm log	
3.5 - Product info, summary	
3.6 - Licences	
3.7 - Version history	
3.8 - Data protection information	

[1] This menu is also shown in any installed subordinate heat pump's limited menu system.

MENU 3.1 - OPERATING INFO

Information about the installation's current operating status (e.g. current temperatures) can be obtained here. In multi-installations, with several interconnected heat pumps, information about these is also shown in this menu. No changes can be made.

You can also read off operating information from all connected wireless units.

A QR code appears on one side. This QR code indicates serial number, product name and limited operating data.

MENU 3.2 - TEMPERATURE LOG

Here you can see the average temperature indoors week by week over the past year.

The average outdoor temperature is only shown if a room temperature sensor/room unit is installed.

In installations with ventilation accessories and no room sensors (BT50), the exhaust air temperature is displayed instead.

MENU 3.3 - ENERGY LOG

Here, you can select which parts of the installation will be included in the log.

MENU 3.3.1 - ENERGY LOG

Number of years
Setting range: 1 – 10 years

Months
Setting range: January - December

Include heating
Alternative: on/off

Include hot water
Alternative: on/off

Show outdoor temperature
Alternative: on/off

Show indoor temperature
Alternative: on/off

Here, you can see a diagram showing how much energy S1257 supplies and consumes. You can select which parts of the installation will be included in the log. It is also possible to activate display of indoor and/or outdoor temperature.

MENU 3.3.2 - POWER LOG

Here, you can see how much power the system has consumed at a given time of day. You can choose to view either hourly or every 15 minutes.

MENU 3.4 - ALARM LOG

To facilitate troubleshooting, the installation's operating status at the time of an alarm is stored here. You can see information for the 10 most recent alarms.

To view operating status in the event of an alarm, select the relevant alarm from the list.

MENU 3.5 - PRODUCT INFO, SUMMARY

Here, you can view general information about the installation, for example software version.

MENU 3.6 - LICENCES

You can view licences for open source code here.

MENU 3.7 - VERSION HISTORY

Here you can see what is new and/or has been changed in different software versions.

MENU 3.8 - DATA PROTECTION INFORMATION

Here, you can see what data NIBE collects for troubleshooting and optimising the product.

Menu 4 - My system

OVERVIEW

4.1 - Operating mode		
4.2 - Plus functions	4.2.2 - Solar electricity[1]	
	4.2.3 - SG Ready	
	4.2.5 - Smart Price Adaption™	4.2.5.1 - Electricity prices
		4.2.5.2 - Transfer fees
4.3 - Profiles[1]		
4.4 - Weather control		
4.5 - Away mode		
4.6 - Smart Energy Source™		
4.7 - Energy price	4.7.1 - Variable electricity price	
	4.7.3 - Shunt-controlled additional heat[1]	
	4.7.4 - Step-controlled additional heat[1]	
	4.7.6 - External additional heat[1]	
4.8 - Time and date		
4.9 - Language		
4.10 - Country		
4.11 - Tools	4.11.1 - Installer details	
	4.11.2 - Sound when pressing button	
	4.11.4 - Home screen	
	4.11.5 - Defrosting PVT panels[1]	
	4.11.6 - Defrost collector[1]	
	4.11.7 - Evacuation fan	
4.30 - Advanced	4.30.4 - Fact. settings user	
	4.30.5 - Installation date	

[1] Consult the accessory's Installer Manual.

MENU 4.1 - OPERATING MODE

Operating mode
Alternative: Auto, Manual, Add. heat only

Manual
Alternative: Compressor, Add. heat, Heating

Add. heat only
Alternative: Heating

The operating mode for S1257 is normally set to "Auto". It is also possible to select operating mode "Add. heat only". Select "Manual" to choose that functions will be activated.

If "Manual" or "Add. heat only" is selected, selectable options are shown further down. Tick the functions you want to activate.

Operating mode "Auto"

In this operating mode, S1257 automatically selects which functions are permitted.

Operating mode "Manual"

In this operating mode you can select what functions are permitted.

"Compressor" is the unit that produces hot water and heating for the property. You cannot deselect "compressor" in manual mode.

"Add. heat" is the unit that helps the compressor to heat the property and/or the hot water when it cannot manage the entire demand alone.

"Heating" ensures you obtain heating in the property. You can deselect the function, when you do not wish to have the heating on.

NOTE!

If you deselect "Add. heat", it may result in insufficient hot water and/or heating in the property.

Operating mode "Add. heat only"

In this operating mode the compressor is not active, only additional heat is used.

NOTE!

If you select the mode "Add. heat only", the compressor is deselected and there is a higher operating cost.

MENU 4.2 - PLUS FUNCTIONS

Settings for any additional functions installed in S1257 can be made in the sub menus.

MENU 4.2.3 - SG READY

Here, you set the part of the climate system (e.g. room temperature) that will be affected on activation of "SG Ready". The function can only be used in mains networks that support the "SG Ready" standard.

Affect room temp heating

With low price mode on "SG Ready", the parallel offset for the indoor temperature is increased by "+1". If a room sensor is installed and activated, the desired room temperature is increased instead by 1 °C.

With overcapacity mode on "SG Ready", the parallel offset for the indoor temperature is increased by "+2". If a room sensor is installed and activated, the desired room temperature is increased by 2 °C instead.

Affect hot water

With low price mode on "SG Ready", the stop temperature for the hot water is set as high as possible with compressor operation only (immersion heater not permitted).

In the case of overcapacity mode on "SG Ready", the hot water is set to large demand mode (immersion heater permitted).

> **CAUTION!**
> The function must be connected to two AUX inputs and be activated in menu 7.4 "Selectable in/outputs".

MENU 4.2.5 - SMART PRICE ADAPTION™

Activated
Alternative: on/off

Price source
Options: "Spot price", "Manual"

Affect heating
Options: "Off", "Comfort", "Saving", "Saving PLUS"

Affect hot water
Alternative: on/off

With smart control activated in menu 2.2
Options: "Off", "Comfort", "Saving", "Saving PLUS"

This function can only be used if you have an active account on myUplink and the electricity supplier supports electricity contracts that are based on the current spot price.

Smart Price Adaption™ adjusts some of the installation's consumption throughout the day to those periods that have the cheapest electricity prices, which can provide savings if you are on a spot price electricity contract. The function is based on downloading the electricity prices for the coming 24 hours via myUplink.

"Price source": Here, you can choose whether to use spot prices or to enter prices manually.

"Degree of effect": The greater the saving your select, the greater the effect the electricity price has.

Certain wireless units can also be affected by Smart Price Adaption™.

> **CAUTION!**
> Increased savings can lead to a negative impact on the comfort.

MENU 4.2.5.1 - ELECTRICITY PRICES

If you have selected "Manual" in menu 4.2.5 - "Smart Price Adaption™", you can enter the electricity price for individual time periods.

MENU 4.2.5.2 - TRANSFER FEES

If you have selected "Spot price" in menu 4.2.5 - "Smart Price Adaption™", you can define transfer fees and assign them to specific time periods. The changes take effect the following day.

MENU 4.4 - WEATHER CONTROL

Activate weath. contr.
Alternative: on/off

Factor
Setting range: 0 – 10

You can select whether you want S1257 to adjust the indoor temperature based on the weather forecast.

You can set factor for outdoor temperature. The higher the value, the greater the effect from the weather forecast.

> **NOTE!**
> This menu is only visible if the installation is connected to myUplink and if a climate system is not using room control.

MENU 4.5 - AWAY MODE

In this menu, you activate/deactivate "Away mode".

When away mode is activated, the following functions are affected:

- the setting for heating is lowered slightly
- the setting for cooling is raised slightly (if cooling accessory is installed)
- the hot water temperature is lowered if demand mode "large" or "medium" is selected
- The AUX function "Away mode" is activated

If you want, you can select for the following functions to be affected:

- ventilation (accessory is required)
- hot water circulation (accessory or use of AUX is required)

MENU 4.6 -SMART ENERGY SOURCE™

CAUTION!

Smart Energy Source™ requires external additional heat.

Smart Energy Source™
Alternative: on/off

Control method
Setting options: Price per kWh / CO2

If Smart Energy Source™ is activated, S1257 prioritises how/to what extent each docked energy source will be used. Here, you can select whether the system will use the energy source that is cheapest at the time or the one that is currently the most carbon dioxide neutral.

NOTE!

The selections in this menu affect menu 4.7 - "Energy price".

MENU 4.7 - ENERGY PRICE

Here you can use tariff control for the additional heat.

Here, you can choose whether the system is to exercise control based on the spot price, tariff control or a set price. The setting is made for each individual energy source. Spot price can only be used if you have a spot price-based agreement with your electricity supplier.

Set the lower tariff periods. It is possible to set two different date periods per year. Within these periods, it is possible to set up to four different periods on weekdays (Monday to Friday) or four different periods on weekends (Saturdays and Sundays).

NOTE!

This menu can only be seen if Smart Energy Source™ is activated.

MENU 4.7.1 - VARIABLE ELECTRICITY PRICE

Here you can use tariff control for the electric additional heat.

Set the lower tariff periods. It is possible to set two different date periods per year. Within these periods, it is possible to set up to four different periods on weekdays (Monday to Friday) or four different periods on weekends (Saturdays and Sundays).

MENU 4.8 - TIME AND DATE

Set time and date, display mode and time zone here.

TIP!

Time and date are set automatically if connected to myUplink. To obtain the correct time, the time zone must be set.

MENU 4.9 - LANGUAGE

Choose the language that you want the information to be displayed in here.

MENU 4.10 - COUNTRY

Here, you specify the country in which the product has been installed. This allows access to country-specific settings in the product.

Language settings can be made regardless of this selection.

CAUTION!

This function is locked after 24 hours. If the display is restarted, or if the software is updated, the country selection will be locked in connection with this. Afterwards, it is not possible to change the country selected in this menu without first replacing components in the product.

MENU 4.11 - TOOLS

Here, you can find tools for use.

MENU 4.11.1 - INSTALLER DETAILS

The installer's name and telephone number are entered in this menu.

Afterwards, the details are visible in the home screen, "Product overview".

MENU 4.11.2 - SOUND WHEN PRESSING BUTTON

Alternative: on/off

Here you choose if you want to hear a sound when you press buttons on the display.

MENU 4.11.4 - HOME SCREEN

Alternative: on/off

Here, you choose which home screens you want to be displayed.

The number of options in this menu varies depending on which products and accessories are installed.

MENU 4.11.7 - EVACUATION FAN

Fan control schedule
Setting range: 0 – 23

Here, you set the time of day when the safety ventilation is checked.

MENU 4.30 - ADVANCED

Menu "Advanced" is intended for advanced users.

MENU 4.30.4 - FACT. SETTINGS USER

All settings that are available to the user (including advanced menus) can be reset to default values here.

> NOTE!
>
> After the factory setting, personal settings such as the heating curve must be reset.

MENU 4.30.5 - INSTALLATION DATE

Here you can enter the date when S1257 was installed.

Menu 5 - Connection

OVERVIEW

5.1 - myUplink	
5.2 - Network settings	5.2.1 - wifi
	5.2.2 - Ethernet
5.4 - Wireless units	
5.10 - Tools	5.10.1 - Direct connection

MENU 5.1 – MYUPLINK

Here, you obtain information about the installation's connection status, serial number and how many users and service partners are connected to the installation. A connected user has a user account in myUplink, which has been given permission to control and/or monitor the installation.

You can also manage the installation's connection to myUplink and request a new connection string.

It is possible to switch off all users and service partners who are connected to the installation via myUplink.

> CAUTION!
>
> After disconnecting all users, none of them can monitor or control the installation via myUplink without requesting a new connection string.

MENU 5.2 – NETWORK SETTINGS

Here, you choose whether the system connects to the internet via wifi (menu 5.2.1) or via a network cable (Ethernet) (menu 5.2.2).

Here, you can set TCP/IP settings for the installation.

To set the TCP/IP settings with the aid of DHCP, activate "Automatic".

During manual setting, select "IP address" and enter the correct address using the keyboard. Repeat this procedure for "Network mask", "Gateway" and "DNS".

> NOTE!
>
> The installation cannot connect to the internet without the correct TCP/IP settings. If you are unsure about applicable settings, use the "Automatic" mode or contact the network administrator (or equivalent) for further information.

> TIP!
>
> All settings made since opening the menu can be reset by selecting "Reset".

MENU 5.4 – WIRELESS UNITS

In this menu you connect wireless devices, and manage settings for connected devices.

Add the wireless device by pressing "Add unit". For the fastest identification of the wireless device, it is recommended that the main unit is first set to search mode. Then set the wireless device to identification mode.

MENU 5.10 – TOOLS

As the installer, you cane.g. connect an installation via an app here, by activating an access point for direct connection to a mobile phone.

MENU 5.10.1 – DIRECT CONNECTION

If you have a user account in myUplink PRO, you can activate direct connection via wifi. This means that the installation will lose communication with the relevant network, and that you instead make settings via your mobile unit, which you connect to the installation.

Menu 6 - Scheduling

OVERVIEW

6.1 - Holiday
6.2 - Scheduling

MENU 6.1 - HOLIDAY

In this menu, you schedule longer changes in heating and hot water temperature.

You can also schedule settings for certain installed accessories.

If a room sensor is installed and activated, the desired room temperature (°C) is set during the time period.

If a room sensor is not activated, the desired offset of the heating curve is set. One step is usually enough to change the room temperature by one degree, but in some cases several steps may be required.

> **TIP!**
>
> Stop the holiday setting about a day before your return so that room temperature and hot water have time to return to their usual levels.

> **NOTE!**
>
> Holiday settings finish on the selected date. If you want to repeat the holiday setting once the end date has passed, go into the menu and change the date.

MENU 6.2 - SCHEDULING

In this menu, you schedule repeated changes of heating and hot water, for example.

You can also schedule settings for certain installed accessories.

> **NOTE!**
>
> Scheduling is repeated according to the selected setting (e.g. every Monday) until you manually deactivate it in the menu.

A mode contains settings that will apply to scheduling. Create a mode with one or more settings by pressing "New mode".

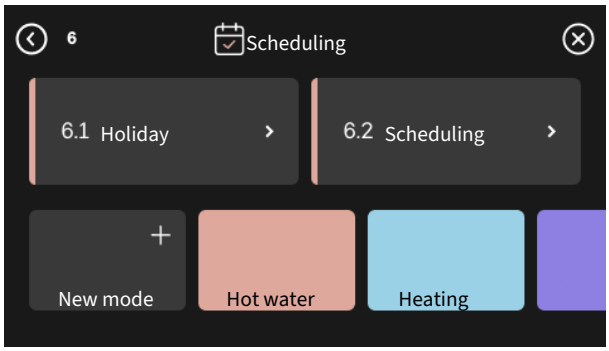

Select the settings that the mode will contain. Drag to the left with your finger to select mode name and colour to make it unique and to distinguish it from other modes.

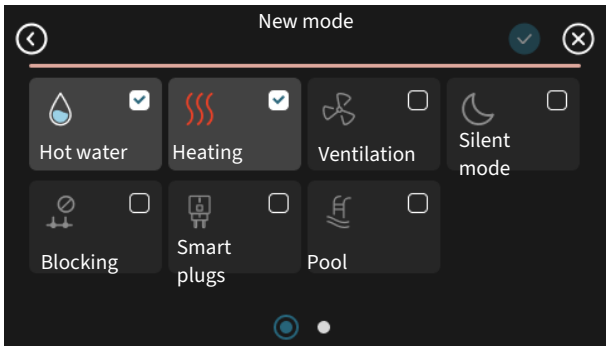

Select an empty row and press it to schedule a mode, and adjust as required. You can enter a tick, if a mode is to be active during the day or overnight.

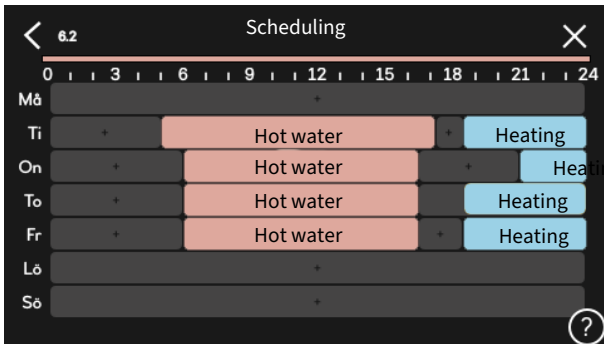

If a room sensor is installed and activated, the desired room temperature (°C) is set during the time period.

If a room sensor is not activated, the desired offset of the heating curve is set. One step is usually enough to change the room temperature by one degree, but in some cases several steps may be required.

Menu 7 - Installer settings

OVERVIEW

7.1 - Operating settings [1]	7.1.1 - Hot water	7.1.1.1 - Temperature setting
		7.1.1.2 - Operating settings [1]
	7.1.2 - Circulation pumps	7.1.2.1 - Op. mode HM pump GP1 [1]
		7.1.2.2 - Pp sp. heating medium GP1 [1]
		7.1.2.6 - Operating mode brine pump [1]
		7.1.2.7 - Pump speed brine [1]
	7.1.3 - Compressor	7.1.3.1 - BlockFreq
	7.1.4 - Ventilation [2]	7.1.4.1 - Fan speed, exhaust air [2]
		7.1.4.2 - Fan speed, supply air [2]
		7.1.4.3 - Fine-tuning the ventilation [2]
		7.1.4.4 - Demand contr. ventilation [2]
	7.1.5 - Add. heat	7.1.5.1 - Int elec add heat
		7.1.5.2 - Max installed el power/BBR
	7.1.6 - Heating	7.1.6.1 - Max diff supply temp
		7.1.6.2 - Flow settings, climate sys
		7.1.6.3 - Power at DOT
		7.1.6.4 - Humidity control [2]
		7.1.6.5 - Passive heating [2]
		7.1.6.6 - Heating control compr. [1]
		7.1.6.7 - Action at high supply temp. [1]
		7.1.6.8 - Sens. compressor stop [1]
	7.1.7 - Cooling [2]	7.1.7.1 - Cooling settings [2]
		7.1.7.2 - Humidity control [2]
		7.1.7.3 - System settings cooling [2]
		7.1.7.4 - Compressor control cooling [2]
		7.1.7.5 - Largest diff. cooling [2]
	7.1.8 - Alarms	7.1.8.1 - Alarm actions
		7.1.8.2 - Emergency mode
	7.1.9 - Load monitor	
	7.1.10 - System settings	7.1.10.1 - Operating prioritisation
		7.1.10.2 - Auto mode setting
		7.1.10.3 - Degree minute settings
		7.1.10.4 - Priority compressor
		7.1.10.5 - Priority ext add heat
		7.1.10.6 - Limitation room temp.
	7.1.12 - Brine settings	
7.2 - Accessory settings [2]	7.2.1 - Add/remove accessories	
	7.2.19 - External energy meter	
7.3 - Multi-installation	7.3.1 - Configure	
	7.3.3 - Name heat pump	
	7.3.4 - Docking	
7.4 - Selectable in/outputs	7.4.1 - Enter a name BT37.x	
	7.4.2 - External power limiting	
	7.4.3 - Name alarm from external input	
7.5 - Tools	7.5.1 - Heat pump, test	7.5.1.1 - Test mode
	7.5.2 - Underfloor drying function	
	7.5.3 - Forced control	

	7.5.4 - System configuration	
	7.5.6 - Inverter replacement	
	7.5.8 - Screen lock	
	7.5.9 - Modbus TCP/IP	
	7.5.12 - Modbus TCP/IP accessories	7.5.12.1 - Add/remove accessories
		7.5.12.2 - Modbus PV [2]
	7.5.13 - Third-party integration	7.5.13.1 - Modbus TCP/IP Ext.
		7.5.13.2 - EEBUS
	7.5.15 - Local REST API	
	7.5.16 - Revert softw upd	
7.6 - Factory setting service		
7.7 - Start guide		
7.8 - Quick start		
7.9 - Logs	7.9.1 - Change log	
	7.9.2 - Message log	
	7.9.3 - Black box	

1 This menu is also shown in any installed subordinate heat pump's limited menu system.
2 Consult the accessory's Installer Manual.

MENU 7.1 - OPERATING SETTINGS

Make operating settings for the system here.

MENU 7.1.1 - HOT WATER

This menu contains advanced settings for hot water operation.

MENU 7.1.1.1 - TEMPERATURE SETTING

Start temperature

Demand mode, small/medium/large
Setting range: 5 – 70 °C

Stop temperature

Demand mode, small/medium/large
Setting range: 5 – 70 °C

Stop temp. periodic increase
Setting range: 55 – 70 °C

"Start temperature" and "Stop temperature" for demand mode small/medium/large: Here, you set the start and stop temperature of the hot water for the different demand modes (menu 2.2).

"Stop temp. periodic increase": Here, you set the stop temperature for periodic increase (menu 2.4).

MENU 7.1.1.2 - OPERATING SETTINGS

If several compressors are available, set the difference between their engagement and disengagement during hot water charging.

MENU 7.1.2 - CIRCULATION PUMPS

This menu contains submenus where you can make advanced circulation pump settings.

MENU 7.1.2.1 - OP. MODE HM PUMP GP1

Operating mode
Options: Auto, Intermittent

"Auto": The heating medium pump runs according to the current operating mode for S1257.

"Intermittent": The heating medium pump starts approx. 20 seconds before and stops 20 seconds after the compressor.

NOTE!

The selection "Intermittent" is only available in installations with external supply temperature sensor (BT25).

MENU 7.1.2.2 - PP SP. HEATING MEDIUM GP1

Heating

Auto
Alternative: on/off

Manual speed
Setting range: 1 - 100 %

Minimum permitted speed
Setting range: 1 - 50 %

Maximum permitted speed
Setting range: 50 - 100 %

Speed in wait mode
Setting range: 1 - 100 %

Hot water

Auto
Alternative: on/off

Manual speed
Setting range: 1 - 100 %

Make settings here for the heating medium pump's speed in the current operating mode, for example in heating or hot water operation. Which operating modes can be changed depends on which accessories are connected.

Heating

"Auto": Here, you set whether the heating medium pump is to be regulated automatically or manually.

"Manual speed": If you have opted to control the heating medium pump manually, you set the desired pump speed here.

"Minimum permitted speed": Here, you can restrict the pump speed to ensure that the heating medium pump is not allowed to operate at a lower speed in auto mode than the set value.

"Maximum permitted speed": Here, you can restrict the pump speed to ensure that the heating medium pump is not allowed to operate at a higher speed than the set value.

"Speed in wait mode": Here, you set the speed the heating medium pump will have in standby mode. Standby mode occurs when heating operation is permitted but there is no need for either compressor operation or electric additional heat.

Hot water

"Auto": Here, you set whether the heating medium pump is to be regulated automatically or manually in hot water mode.

"Manual speed": If you have opted to control the heating medium pumps manually, you set the desired pump speed here in hot water mode.

MENU 7.1.2.6 - OPERATING MODE BRINE PUMP

Operating mode
Alternative: Intermittent, Continuous, 10 days cont.

"Intermittent": The brine pump starts and stops 20 seconds before, or after, the compressor. For ground water systems, the brine pump starts and stops 2 minutes before and after the compressor respectively.

"Continuous": Continuous operation.

"10 days cont.": Continuous operation for 10 days. The pump then changes to intermittent operation.

TIP!

You can use "10 days cont." at start-up to obtain continuous circulation during a start-up time in order to make it easier to bleed the system.

MENU 7.1.2.7 - PUMP SPEED BRINE

Operating mode
Setting range: Fixed delta, Auto, Manual

Delta-T, fixed delta
Setting range: 2 - 10 °C

Manual
Setting range: 1 - 100 %

Make settings for the brine pump's speed here.

"Operating mode": Here, you set whether the brine pump will be controlled automatically, manually or with fixed delta.

"Delta-T, fixed delta": Here, you set whether the brine pump will be controlled with fixed delta, e.g. for ground water systems.

"Manual": If you have chosen to control the brine pump manually, you set the desired pump speed here.

MENU 7.1.3 - COMPRESSOR

This menu contains sub-menus where you can make advanced compressor settings.

MENU 7.1.3.1 - BLOCKFREQ

Block freq 1 and 2
Setting range start S1257-8 start: 25 – 111 Hz

Setting range stop S1257-8 stop: 30 – 116 Hz

Setting range start S1257-13 start: 20 – 95 Hz

Setting range stop S1257-13 stop: 25 – 100 Hz

Maximum setting range: 50 Hz

Here you can set a frequency range where the compressor is blocked. The limits for the setting range can differ depending on model of heat pump.

CAUTION!

A large blocked frequency range can cause the compressor to run jerkily.

MENU 7.1.5 - ADD. HEAT

This menu contains sub-menus where you can make advanced additional heat settings.

MENU 7.1.5.1 - INT ELEC ADD HEAT

Max. connected el. power
Setting range: 7 / 9 kW

Max. set electrical power
Setting range S1257-8 1x230 V: 0 - 4.5 kW

Setting range S1257-13 1x230 V: 0 - 7 kW

Setting range S1257-8 3x230 V: 0 - 4.5 kW

Setting range S1257-13 3x230 V: 0 - 9 kW

Setting range S1257-8 3x400 V: 0 - 6.5 kW

Setting range S1257-13 3x400 V: 0 - 9 kW

Max set el power (SG Ready)
Setting range 1x230 V: 0 – 4.5 kW

Setting range 3x230 V: 0 – 4.5 kW

Setting range 3x400 V: 0 – 6.5 kW

Here you set the max electrical power for the internal electric additional heat in S1257, during normal operation and in overcapacity mode (SG Ready).

MENU 7.1.5.2 - MAX INSTALLED EL POWER/BBR

Max. set electrical power
Setting range: 1,000 – 30,000 W

To comply with building regulations in certain markets, it is possible to lock the product's maximum power draw.

If the above building regulations are not applicable, do not use this setting.

In this menu, you can set the value corresponding to the heat pump's maximum power connection for heating, hot water and cooling, if applicable.

You must take into consideration whether there are any external electrical components that also have to be included. After the value has been locked, a period of one week starts during which you can change your mind. After this period, components in the product must be replaced to make it possible to change the setting in this menu.

MENU 7.1.6 - HEATING

This menu contains sub-menus where you can make advanced settings for heating operation.

MENU 7.1.6.1 - MAX DIFF SUPPLY TEMP

Max diff compressor
Setting range: 1 – 25 °C

Max diff additional heat
Setting range: 1 – 24 °C

BT12 offset
Setting range: -5 – 5 °C

Here you set the maximum permitted difference between the calculated and actual supply temperature in the event of compressor or additional heat mode respectively. Max difference additional heat can never exceed max difference compressor

"Max diff compressor": If the current supply temperature *exceeds* the calculated flow by the set value, the degree minute value is set to 1. The compressor stops when there is only a heating demand.

"Max diff additional heat": If "Additional heat" is selected and activated in menu 4.1 and the current supply temperature *exceeds* the calculated temperature by the set value, the additional heat is forced to stop.

"BT12 offset": If there is a difference between the external supply temperature sensor (BT25) and condenser sensor, supply line (BT12), you can set a fixed offset here to compensate for the difference.

MENU 7.1.6.2 - FLOW SETTINGS, CLIMATE SYS

Setting
Options: Radiator, Underfl heating, Rad + Und. heat., Own setting

DOT
Setting range DOT: -40.0 – 20.0 °C

Delta temp at DOT
Setting range dT at DOT: 1.0 – 25.0 °C

The type of heating distribution system the heating medium pump works towards is set here.

dT at DOT is the difference in degrees between supply and return temperatures at design outdoor temperature.

MENU 7.1.6.3 - POWER AT DOT

Manually selected power at DOT
Alternative: on/off

Power at DOT
Setting range: 1 – 1,000 kW

Here, you set the power the property requires at DOT (dimensioned outdoor temperature).

If you choose not to activate "Manually selected power at DOT", the setting is made automatically, i.e. S1257 calculates suitable power at DOT.

MENU 7.1.6.6 - COMPRESSORS, START SEQUENCE

Options: Degree minutes, Cluster

Here, you set the start sequence for compressors in a multi-system.

Degree minutes: The compressors are stepped in one at a time according to the degree minute settings.

Cluster: S1257 manages all the heat pumps in the system as one unit and steps compressors in and out based on the power demand. The power demand determines how many compressors are started. If there is a low power demand, one compressor is started; if there is a large power demand, several are started at the same time. The supply temperature is prioritised in this option. The power demand is the power needed to reach the desired supply temperature at the current operational point.

MENU 7.1.6.7 - ACTION AT HIGH SUPPLY TEMP.

Options: Logging only, Step out of compressor

"Logging only": Only logs the compressor when multiple compressors are active.

"Step out of compressor": Steps out a compressor at a high supply temperature.

MENU 7.1.6.8 - SENS. COMPRESSOR STOP

Setting range: 0.4 - 1.4

If menu 7.1.6.6 - "Compressors, start sequence" is activated, you can change the sensitivity for compressor stops, when the delta changes rapidly, in a system with more than one compressor.

At a higher value, the system works more. At a lower value, the system works less.

CAUTION!

Too high a value can damage the system.

MENU 7.1.8 - ALARMS

In this menu, you make settings for the safety measures that S1257 will implement in the event of any operational disruption.

MENU 7.1.8.1 - ALARM ACTIONS

Reduce room temperature
Alternative: on/off

Stop producing HW
Alternative: on/off

Audio signal on alarm
Alternative: on/off

Select how you want the S1257 to alert you that there is an alarm in the display here.

NOTE!

To be able to select "Start auxiliary mode" in the event of a malfunction, an alarm action must be selected.

If no alarm action is selected, this can result in higher energy consumption in the event of a malfunction. For more information, see section "Manage alarm".

MENU 7.1.8.2 - EMERGENCY MODE

Immersion heater output
Setting range 1x230 V: 4 – 4.5 kW

Setting range 3x230 V: 4 – 4.5 kW

Setting range 3x400 V: 4 – 6.5 kW

Settings are made in this menu for how the additional heat will be controlled in emergency mode.

NOTE!

In emergency mode, the display is switched off. If you feel the selected settings are insufficient in emergency mode, you will not be able to change these.

MENU 7.1.9 - LOAD MONITOR

Fuse size
Setting range: 1 – 400 A

Transformer ratio
Setting range: 300 – 3,000

Detect phase sequence
Here, you activate the phase detection.

Here, you set fuse size and transformer ratio for the system. The transformer ratio is the factor that is used to convert the metered voltage to current.

Here, you can also check which current sensor is installed on which incoming phase to the property (this requires the current sensors to be installed). Perform the check by selecting "Detect phase sequence".

TIP!

Search again, if the phase detection fails. The detection process is very sensitive and is easily affected by other appliances in the property.

MENU 7.1.10 - SYSTEM SETTINGS

Here, you can adjust various system settings for the installation.

MENU 7.1.10.1 - OPERATING PRIORITISATION

Auto mode
Alternative: on/off

Min
Setting range: 0 – 180 minutes

Here, you select how long the installation will work with each demand, if there are several simultaneous demands.

"Operating prioritisation" is normally set in "Auto mode", but it is also possible to set prioritisation manually.

"Auto mode": In auto mode, S1257 optimises operating times between different requirements.

"Manual": Select how long the installation will work with each demand, if there are several demands at the same time.

If there is only one demand, the installation works with that demand.

If 0 minutes are selected, this means that the demand is not prioritised, but will instead only be activated when there is no other demand.

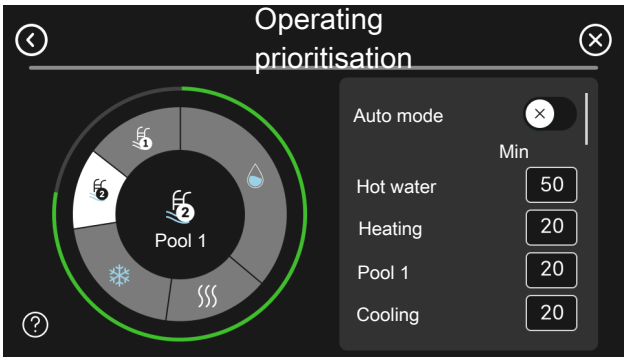

MENU 7.1.10.2 - AUTO MODE SETTING

Stop heating
Setting range: -20 – 40 °C

Stop additional heat
Setting range: -25 – 40 °C

Filtering time heating
Setting range: 0 – 48 h

"Stop heating", "Stop additional heat": In these menu options, you set the temperatures that the system will use for control in auto mode.

NOTE!

It cannot be set "Stop additional heat" higher than "Stop heating".

"Filtering time heating": You can set the time over which the average outdoor temperature is calculated. If you select 0, the current outdoor temperature is used.

MENU 7.1.10.3 - DEGREE MINUTE SETTINGS

Current value
Setting range: -3,000 – 100 DM

Heating, auto
Alternative: on/off

Start compressor
Setting range: -1,000 – (-30) DM

Relative DM start additional heat
Setting range: 100 – 2,000 DM

Diff. between add heat steps
Setting range: 10 – 1,000 DM

Stepping diff compressors
Setting range: 10 – 2,000 DM

DM = degree minutes

Degree minutes (DM) are a measure of the current heating/cooling demand in the property and determine when the compressor or additional heat will start/stop.

NOTE!

Higher value on "Start compressor" gives more compressor starts, which increase wear on the compressor. Too low value can give uneven indoor temperatures.

MENU 7.1.10.4 - PRIORITY COMPRESSOR

Auto
Alternative: on/off

Date range
Setting range: 0 – 30 days

Outdoor temperature
Setting range: -50 – 50°C

Here, you select the priority order for air/water heat pumps in a hybrid system.

Auto: Here, you set whether the prioritisation is to be regulated automatically.

Date range: Here, you set the start and stop dates for the prioritisation.

Outdoor temperature: Here, you set the outdoor temperature at which the air/water heat pump is prioritised in a hybrid system.

MENU 7.1.10.5 - PRIORITY EXT ADD HEAT

Prio compressor units
Setting range: Auto, BT1 Temp., Date

Prio compr. units start date
Setting range: 0 – 30 days

Prio compr. units end date
Setting range: 0 – 30 days

Prio compressor units over
Setting range: -50 - 50°C

Here, you select the order of priority for units in a system with both compressor units and external additional heat. Compressor units can be prioritised automatically, above a certain outdoor temperature or for part of the year.

MENU 7.1.10.6 - LIMITATION ROOM TEMP.

Heating

Highest adjustable temperature
Setting range: 5 - 35 °C

Here, you set the lowest and highest indoor temperature for heating demand. It is not possible to drop below or exceed the temperature limitation in other settings, e.g. room sensor settings.

MENU 7.1.12 - BRINE SETTINGS

Confirm freeze protect. level
Alternative: on/off

Brine type
Options: With antifreeze, without antifreeze

Min. brine out
Setting range: -12 – 15 °C

Automatic reset
Alternative: on/off

Max brine in
Setting range: 10 – 35 °C

Here, you set the brine system. Incorrect settings can cause damage to the cooling circuit.

"Confirm freeze protect. level": Here, you reset the alarm that is triggered when a change to the freeze protection limit is confirmed.

"Brine type": Here, you select whether the brine is to be with or without antifreeze.

Min. brine out EP14: With the DIP switch, you can configure settings for operation with and without antifreeze.

"Automatic reset": Here, you select whether the alarm is to be reset automatically when the temperature has increased by 1 °C above the set value.

"Max brine in": Here, you set the temperature at which the heat pump will activate the alarm for high temperature in incoming brine.

During start-up, it is permitted for a limited time to have a temperature of 5 °C above "Max brine in".

MENU 7.2 - ACCESSORY SETTINGS

The operating settings for accessories that are installed and activated are made in the sub-menus for this.

MENU 7.2.1 - ADD/REMOVE ACCESSORIES

Here, you tell S1257 which accessories are installed.

To identify connected accessories automatically, select "Search for accessories". It is also possible to select accessories manually from the list.

MENU 7.2.19 - PULSE ENERGY METER

Activated
Alternative: on/off

Set mode
Alternatives: Energy per pulse / Pulses per kWh

Energy per pulse
Setting range: 0 – 10000 Wh

Pulses per kWh
Setting range: 1 – 10000

Up to two electricity meters or energy meters (BE6-BE7) can be connected to S1257.

"Energy per pulse": Here, you set the amount of energy to which each pulse will correspond.

"Pulses per kWh": Here, you set the number of pulses per kWh that are sent to S1257.

TIP!

"Pulses per kWh" is set and presented in whole numbers. If a higher resolution is required, use "Energy per pulse".

MENU 7.3 - MULTI-INSTALLATION

In the sub-menus here, you make settings for the heat pumps that are connected to S1257.

MENU 7.3.1 - CONFIGURE

Multi-installation
Alternative: on/off

Search installed heat pumps
Alternative: on/off

"Multi-installation": Here, you specify whether S1257 is part of a multi-installation (one installation with several connected heat pumps).

"Search installed heat pumps": Here, you can search for, activate or deactivate connected heat pumps.

NOTE!

In systems with multiple heat pumps, each heat pump must have a unique ID. You enter this for each heat pump that is connected to S1257.

MENU 7.3.2 - INSTALLED HEAT PUMPS

Here, you select the settings that you want to make for each heat pump.

MENU 7.3.3 - NAME HEAT PUMP

Here, you name the heat pumps that are connected to S1257.

MENU 7.3.4 - DOCKING

Here, you set how the system is docked in respect of pipes, in relation to heating the property and any accessories.

TIP!

Examples of docking alternatives can be found at nibe.eu.

This menu has a docking memory which means that the control system remembers how a particular diverter valve is docked and automatically enters the correct docking the next time you use the same diverter valve.

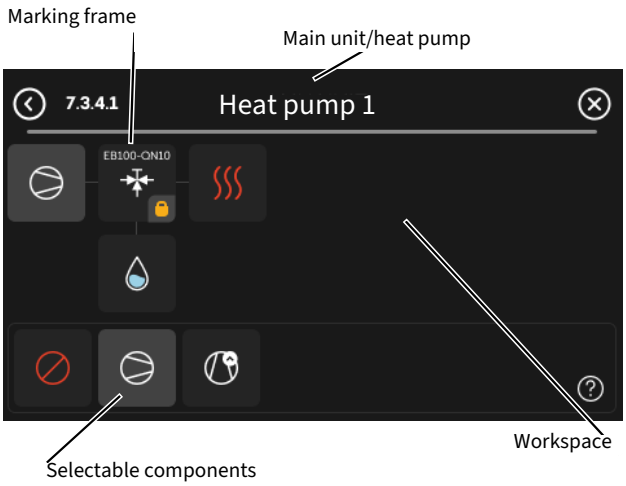

"Main unit/heat pump": Here, you select the heat pump for which the docking setting is to be made (if the heat pump is solitary in the system, only the main unit is shown).

"Workspace for docking": The system docking is drawn here.

"Compressor": Select here if the compressor in the heat pump is blocked (factory setting), externally controlled via a selectable input or standard (docked to hot water charging and heating the building, for example).

"Marking frame": Press the marking frame you want to change. Select one of the selectable components.

Symbol	Description
	Blocked
	Compressor (standard)
	Compressor (externally controlled)
	Diverter valve The designations above the diverter valve indicate where it is electrically connected (EB100 = Main unit, EB101 = Heat pump 1, etc.).
	Hot water charging. For a multi-installation: hot water with the main unit and/or shared hot water from several different heat pumps.
	Hot water charging with subordinate heat pump in multi-installation.
	Pool 1
	Pool 2
	Heating (heating the building, includes any extra climate system)

MENU 7.4 - SELECTABLE IN/OUTPUTS

Here, you state where the external switch function has been connected, either to one of the AUX inputs on terminal block X28 or to the AUX output on terminal block X27.

MENU 7.4.1 - ENTER A NAME BT37.X

In this menu, you can change the name of the AUX-connected BT37 sensors.

The sensor's designation (BT37.1, BT37.2, BT37.3, BT37.4, BT37.5, BT37.6) will be added to the name you give the sensor.

MENU 7.4.2 - EXTERNAL POWER LIMITING

External power limitation
Setting range: 1.1 – 100.0 kW

For markets where the mains network operator requires dynamic control of the mains network's load.

In this menu, you set the fixed value to which the compressor's and the immersion heater's operating power will be limited.

This function is suitable for use during the hours when the property is using the most electricity.

MENU 7.4.3 - NAME ALARM FROM EXTERNAL INPUT

In this menu, you can change the names of alarms from AUX inputs.

MENU 7.5 - TOOLS

Here, you can find functions for maintenance and service work.

MENU 7.5.1 - HEAT PUMP, TEST

CAUTION!

This menu and its sub-menus are intended for testing the heat pump.

Use of this menu for other reasons may result in the installation not functioning as intended.

MENU 7.5.2 - UNDERFLOOR DRYING FUNCTION

Length period 1 – 7

Setting range: 0 – 30 days

Temperature period 1 – 7

Setting range: 15 – 70 °C

Set the function for under floor drying here.

You can set up to seven time periods with different calculated supply temperatures. If fewer than seven periods are to be used, set the remaining periods to 0 days.

When the underfloor drying function has been activated, a counter is displayed showing the number of full days the function has been active. The function counts degree minutes in the same way as during normal heating operation, but for the supply temperatures that are set for the respective period.

CAUTION!

During active underfloor drying, the heating medium pump runs at 100 %, regardless of the setting in menu 7.1.2.2.

TIP!

If operating mode "Add. heat only" is to be used, select it in menu 4.1.

For a more even supply temperature, the additional heat can be started earlier by setting "Relative DM start additional heat" in menu 7.1.10.3 to 100 DM. When set underfloor drying periods have finished, reset the menus 4.1 and 7.1.10.3 as per previous settings.

MENU 7.5.3 - FORCED CONTROL

Here you can force control the various components in the installation. The most important safety functions remain active however.

To be able to force control certain components, the compressor may need to be preheated.

CAUTION!

Forced control is only intended to be used for troubleshooting purposes. Using the function in any other way may cause damage to the components in the installation.

MENU 7.5.6 - INVERTER REPLACEMENT

This menu includes a guide that is used during inverter replacement.

The menu is only visible when communication with the inverter is lost.

MENU 7.5.8 - SCREEN LOCK

Here, you can choose to activate the screen lock for S1257. During activation, you will be asked to enter the required code (four digits). The code is used when:

- deactivating the screen lock.
- changing the code.
- starting up the display when it has been inactive.
- restarting/starting up S1257.

MENU 7.5.9 - MODBUS TCP/IP

Alternative: on/off

Here, you activate Modbus TCP/IP.

MENU 7.5.12 - MODBUS TCP/IP ACCESSORIES

Alternative: on/off

Here, you state which Modbus-connected accessories are present in the system.

MENU 7.5.12.1 - ADD/REMOVE ACCESSORIES

Alternative: on/off

Here, you add or remove accessories for Modbus with PV inverter.

MENU 7.5.12.2 - MODBUS PV

Alternative: on/off

Here, you activate Modbus PV and configure communication with the inverter.

MENU 7.5.13 - THIRD-PARTY INTEGRATION

Here, you manage connections to external services.

MENU 7.5.13.1 - MODBUS TCP/IP EXT.

Alternative: on/off

Here, you activate Modbus TCP/IP for external services.

MENU 7.5.13.2 - EEBUS

Alternative: on/off

Here, you can activate EEBUS communication.

MENU 7.5.15 -LOCAL REST API

Activated
Alternative: on/off

IP address restriction
Alternative: on/off

Read only REST API
Alternative: on/off

Here, you make settings for local REST API.

In the menu there is a URL that links to REST API documentation, which makes it easier to get started.

The provided fingerprint is the security certificate and can be used to ensure that the communication is to the correct unit.

MENU 7.5.16 -REVERT SOFTW UPD

Here, you restore the software to the previous software version.

MENU 7.6 - FACTORY SETTING SERVICE

Here, you can reset all settings (including settings available to the user) to factory values

Also new parametrisation of the inverter can be done here.

CAUTION!

When resetting, the start guide is displayed the next time S1257 restarts.

MENU 7.7 - START GUIDE

When S1257 is started for the first time, the start guide is automatically activated. From this menu, you can start it manually.

MENU 7.8 - QUICK START

You can quick start the compressor here.

One of the following demands for the compressor must exist for quick start:

- heating
- hot water
- cooling (accessory is required)
- pool (accessory is required)

NOTE!

For it to be possible to quick-start the compressor, it must have reached the correct temperature. It can take up to 30 minutes to preheat the compressor.

NOTE!

Too many quick starts in a short space of time may damage the compressor and its auxiliary equipment.

MENU 7.9 - LOGS

Under this menu, there are logs that collect information about alarms and changes made. The menu is intended to be used for troubleshooting.

MENU 7.9.1 - CHANGE LOG

Read off any previous changes to the control system here.

CAUTION!

The change log is saved at restart and remains unchanged after factory setting.

MENU 7.9.2 - MESSAGE LOG

This log is intended to be used for troubleshooting.

MENU 7.9.3 - BLACK BOX

Via this menu, it is possible to export all logs (Change log, Message log) to USB. Connect a USB memory and select the log(s) you want to export.

Service

Service actions

> **CAUTION!**
> Servicing should only be carried out by persons with the necessary expertise.
>
> When replacing components on S1257 only replacement parts from NIBE may be used.

EMERGENCY MODE

> **CAUTION!**
> Do not start the system before filling up with water. Components in the system could be damaged.

Emergency mode is used in event of operational interference and in conjunction with service.

When the emergency mode is active, the status lamp is yellow.

You can activate the emergency mode both when S1257 is running and when it is switched off.

To activate when S1257 is running: press and hold the on/off button (SF1) for 2 seconds and select "Emergency mode" from the shutdown menu.

To activate emergency mode when S1257 is switched off: press and hold the on/off button (SF1) for 5 seconds. (Deactivate the emergency mode by pressing once).

When S1257 is put in emergency mode, the display is switched off and the most basic functions are active:

- The immersion heater works to maintain the calculated supply temperature. If there is no outdoor temperature sensor (BT1), the immersion heater works to maintain the maximum supply temperature, set in menu 1.30.6 - "Highest supply heat".
- The compressor and the brine pump are off and only the heating medium pump and the electric additional heat are active. Max output for the immersion heater in emergency mode, limited according to the setting in menu 7.1.8.2 - "Emergency mode".

DRAINING THE HOT WATER HEATER

The siphon principle is used to empty the hot water heater. This can be done either via the drain valve on the incoming cold water pipe or by inserting a hose into the cold water connection.

> **CAUTION!**
> There may be some hot water, risk of scalding.

DRAINING THE CLIMATE SYSTEM IN THE HEAT PUMP

> **CAUTION!**
> There may be some hot water, risk of scalding.

To be able to service the components in the heat pump belonging to the climate system, it is often easiest to empty the heat pump first.

1. Close externally mounted shut-off valves.
2. Connect a hose to the drain valve (QM1) and open the valve. Some liquid will run out.
3. Air must get into the system for the remaining liquid to run out. To let in air, slacken off the connection slightly at the heating medium connection return (XL2).

DRAINING THE BRINE SYSTEM IN THE HEAT PUMP

To be able to service the components in the heat pump belonging to the brine system, it is often easiest to empty the heat pump first.

1. Close externally mounted shut-off valves.
2. Connect a hose to the drain valve (QM2), place the other opening of the hose in a vessel and open the valve. A small amount of brine will flow into the vessel.
3. Air must get into the system for the remaining brine to run out. To let in air, slacken off the connection slightly at the brine connection out (XL7).

CHECKING THE MAGNETITE INDICATOR

The filter ball valve contains a magnetite indicator that shows whether there are magnetic particles in the climate system water.

When checking the magnetite indicator, the filter in the filter ball valve should also be cleaned.

To check the magnetite indicator:

1. Switch off S1257 by pressing the on/off button (SF1).
2. Close the filter ball valve.
3. Remove the locking ring in the valve.
4. Take out the magnet from the filter ball valve and check whether there is magnetite on it. Wipe it off if necessary.
5. Reinstall the magnet.
6. Reinstall the locking ring. Check that it sits in the groove.
7. If there was a lot of magnetite on the magnet, the climate system should be flushed clean and/or a magnetite filter installed.

HELPING THE CIRCULATION PUMP TO START

The circulation pumps in S1257 have an automatic assisted start function. If necessary, the pumps can also be started manually. In such cases, take the following action:

1. Shut off S1257.
2. Remove the front cover
3. Press in the screw for start help using a screwdriver as illustrated.
4. With the screw pressed in, turn the screwdriver in any direction.
5. Start S1257 and check that the circulation pumps function.

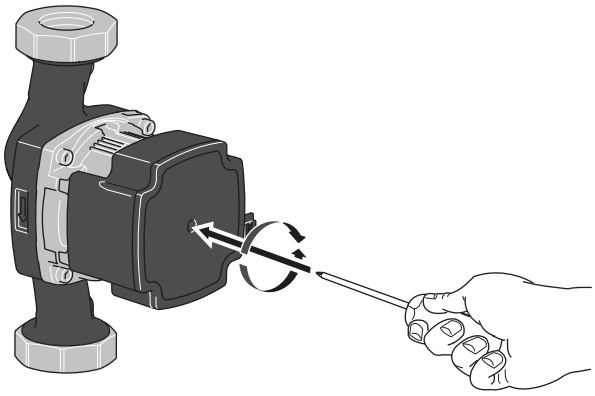

The image shows an example of what a circulation pump can look like.

TEMPERATURE SENSOR DATA

Temperature (°C)	Resistance (kOhm)	Voltage (VDC)
-10	56.20	3.047
0	33.02	2.889
10	20.02	2.673
20	12.51	2.399
30	8.045	2.083
40	5.306	1.752
50	3.583	1.426
60	2.467	1.136
70	1.739	0.891
80	1.246	0.691

PULLING OUT THE COOLING MODULE

The cooling module (EP14) is equipped with handles and can be pulled out for service and transport.

The images show examples of what a cooling module could look like.

> **CAUTION!**
>
> Switch off the heat pump and cut the power with the safety switch.

1. Close the shut-off valves (EP14-QM31), (EP14-QM32), (EP14-QM33) and (EP14-QM34).

   Drain the cooling module according to the instructions in avsnitt "Draining the climate system in the heat pump" and "Draining the brine system in the heat pump".

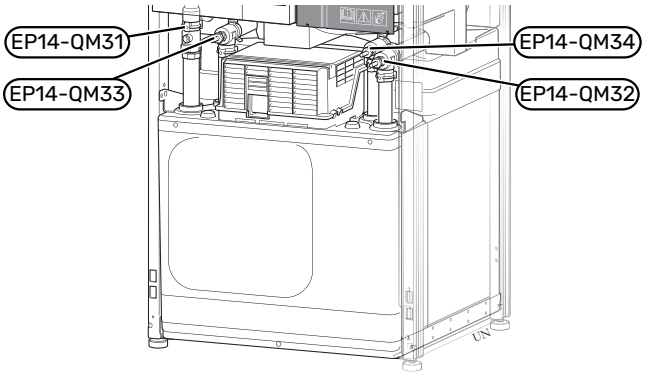

The image shows an example of how a cooling module can appear.

2. Remove the insulation.
3. Remove the locking plate.
4. Disconnect the pipe connection under the shut-off valve (EP14-QM31).

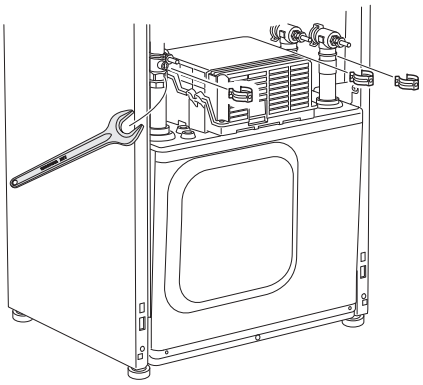

5. Remove the two screws.

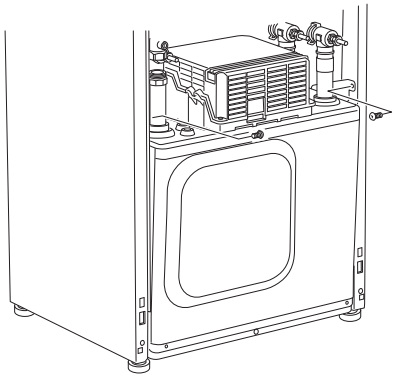

6. Disconnect the connectors (XF2), (XF11) and (XF22).

7. Carefully pull out the cooling module using a suitable tool.

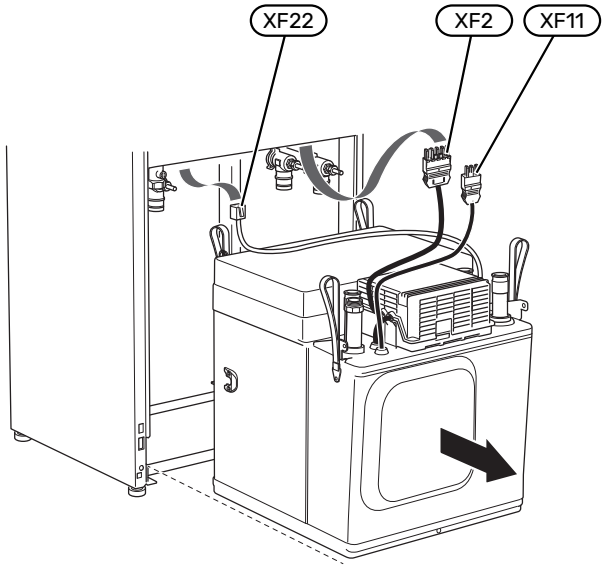

8. Protect the connections (including the fan's) so that no dirt enters the cooling module.
9. When replacing the cooling module, the seal of the evacuation fan must be replaced.

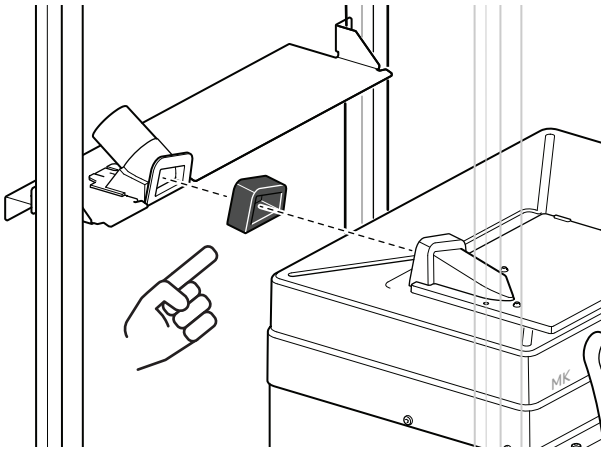

TIP!

The cooling module is installed in reverse order.

CAUTION!

During reassembly, the enclosed O-rings should replace the existing ones on the shut-off valves (EP14-QM32), (EP14-QM33) and (EP14-QM34).

USB SERVICE OUTLET

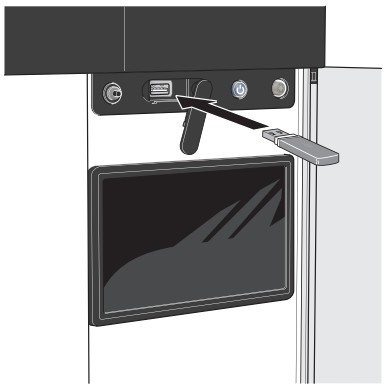

When a USB memory is connected, a new menu (menu 8) appears in the display.

Menu 8.1 - Update the software

You can update the software with a USB memory in menu 8.1 - "Update the software".

CAUTION!

In order to update using a USB memory, the memory must contain a file with software for S1257 from NIBE.

Software for S1257 can be downloaded from myuplink.com.

One or more files are shown in the display. Select a file and press "OK".

TIP!

A software update does not reset the menu settings in S1257.

NOTE!

If the update is interrupted before it is complete (e.g. during a power cut), the software is automatically restored to the previous version.

Restoring the software via menu

Restoring the software to the previous version is performed in menu 7.5.16 - "Revert softw upd".

Manual restoring of software

If you want to restore the software to the previous version manually:

1. Switch off S1257 via the shutdown menu. The status lamp goes out, off/on button light up blue.
2. Press the on/off button once.
3. When the on/off button changes colour from blue to white, press and hold the on/off button.
4. When the status lamp changes to green, release the on/off button.

NOTE!

If the status lamp should turn yellow at any time, S1257 has ended up in emergency mode and the software has not been restored.

Menu 8.2 - Logging

Interval
Setting range: 1 s – 60 min

Here you can choose how current measurement values from S1257 should be saved onto a log file on the USB memory.

1. Set the desired interval between loggings.
2. Select “Start logging".
3. The relevant measurement values from S1257 are now saved in a file on the USB memory at the set interval until you select "Stop logging".

NOTE!

Select "Stop logging" before removing the USB memory.

Logging floor drying

Here you can save a floor drying log on the USB memory and in this way see when the concrete slab reached the correct temperature.

- Make sure that "Underfloor drying function" is activated in menu 7.5.2.
- A log file is now created, where the temperature and the immersion heater output can be read off. Logging continues until "Underfloor drying function" is stopped.

NOTE!

Close "Underfloor drying function" before removing the USB memory.

Menu 8.3 - Manage settings

Save settings
Alternative: on/off

Display backup
Alternative: on/off

Restore settings
Alternative: on/off

In this menu, you save/upload menu settings to/from a USB memory stick.

Save settings: Here, you save menu settings in order to restore them later or to copy the settings to another S1257.

Display backup: Here, you save both menu settings and measurement values, such as energy data.

NOTE!

When you save menu settings to the USB memory, you replace any previously saved settings on the USB memory.

Restore settings: Here, you upload all menu settings from the USB memory stick.

NOTE!

Resetting of menu settings from the USB memory cannot be undone.

Menu 8.5 -Export energy logs

In this menu, you can save energy logs to a USB memory.

MODBUS TCP/IP

S1257 has built-in support for Modbus TCP/IP, which is activated in menu 7.5.9 - "Modbus TCP/IP".

TCP/IP settings are set in menu 5.2 - "Network settings". Only connections from IP addresses within the local address space as specified below:

10.0.0.0 - 10.255.255.255

172.16.0.0 - 172.31.255.255

192.168.0.0 - 192.168.255.255

Modbus protocol uses port 502 for communication.

Readable	ID	Description
Read	0x04	Input Register
Read writable	0x03	Holding Register
Writable multiple	0x10	Write multiple registers
Writable single	0x06	Write single register

Available registers are shown in the display for the currect product and its installed and activated accessories.

Export register

1. Insert a USB memory.
2. Go to menu 7.5.9 and choose "Export most used registers"or"Export all registers". These will then be stored on the USB memory in CSV format. (These options is only shown when a USB memory in inserted in the display).

IP address restriction

1. Go to menuy 7.5.9 and choose "IP address restriction".
2. Enter the IP address that is allowed to communicate with the installation.

CAUTION!

Modbus/TCP communication over the open internet is very risky and is not recommended.

MAC address

Go to menu 3.1.13 - "Connections" to see the MAC address.

Reading only

Reading Modbus only means that no values can be sent to the system, only reading of values is possible.

LOCAL REST API

REST API is a secure, local alternative to MODBUS TCP/IP. REST API is well-known, self-descriptive and lists parameters, as well as being easy to integrate with other systems.

Go to menu 7.5.15 - "Local REST API" to activate the function.

Malfunctions

In most cases, the S1257 notes a malfunction and indicates this with alarms and presents action instructions in the display.

Info-menu

All the heat pump's measurement values are gathered under menu 3.1 - "Operating info" in the heat pump's menu system. Looking through the values in this menu can often simplify finding the fault source.

Manage alarm

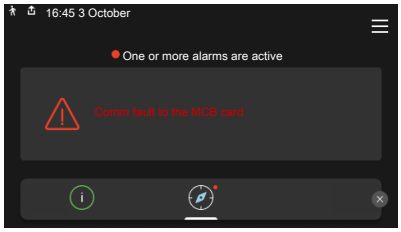

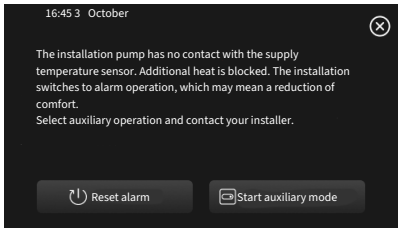

In the event of an alarm, a malfunction has occurred and the status lamp shines with a steady red light. You receive information about the alarm in the smartguide on the display.

ALARM

In the event of an alarm with a red status lamp, a malfunction has occurred that S1257 cannot remedy itself. On the display, you can see what type of alarm it is and reset it.

In many cases, it is sufficient to select "Reset alarm" for the installation to revert to normal operation.

If a white light comes on after selecting "Reset alarm", the alarm has been remedied.

"Auxiliary operation" is a type of emergency mode. This means that the installation tries to produce heat and/or hot water, even though there is some kind of problem. This could mean that the compressor is not in operation. In this case, any electric additional heating produces heat and/or hot water.

NOTE!

To select "Start auxiliary mode", an alarm action must be selected in the menu 7.1.8.1 - "Alarm actions".

NOTE!

Selecting "Start auxiliary mode" is not the same as correcting the problem that caused the alarm. Therefore, the status lamp will remain red.

Troubleshooting

If the operational interference is not shown in the display the following tips can be used:

BASIC ACTIONS

Start by checking the following items:

- Group and main fuses of the building.
- The building's earth circuit breaker.
- Miniature circuit-breaker for S1257 (FC1).
- Temperature limiter for S1257 (FQ10).
- Correctly set load monitor.

LOW HOT WATER TEMPERATURE OR A LACK OF HOT WATER

- Closed or throttled externally mounted filling valve for the hot water.
  - Open the valve.
- Mixing valve (if there is one installed) set too low.
  - Adjust the mixer valve.
- S1257 in incorrect operating mode.
  - Enter menu 4.1 - "Operating mode". If "Auto" mode is selected, select a higher value for "Stop additional heat" in menu 7.1.10.2 - "Auto mode setting".
  - If mode "Manual" is selected, select "Additional heat".
- Large hot water consumption.
  - Wait until the hot water has heated up. Temporarily increased hot water capacity can be activated in the "Hot water" home screen, in menu 2.1 - "More hot water" or via myUplink.
- Too low hot water setting.
  - Enter menu 2.2 - "Hot water demand" and select a higher demand mode.
- Low hot water availability with "Smart control" activated.
  - If the hot water usage has been low for an extended period of time, less hot water than normal will be produced. Activate "More hot water" via the "Hot water" home screen, in menu 2.1 - "More hot water" or via myUplink.
- Too low or no operating prioritisation of hot water.
  - Enter menu 7.1.10.1 - "Operating prioritisation" and increase the time for when hot water is to be prioritised. Note that, if the time for hot water is increased, the time for heating production is reduced, which can give lower/uneven room temperatures.
- "Holiday" activated in menu 6.

- Enter menu 6 and deactivate.

LOW ROOM TEMPERATURE

- Closed thermostats in several rooms.
  - Set the thermostats to max in as many rooms as possible. Adjust the room temperature via the "Heating" home screen, rather than turning down the thermostats.
- S1257 in incorrect operating mode.
  - Enter menu 4.1 - "Operating mode". If "Auto" mode is selected, select a higher value for "Stop heating" in menu 7.1.10.2 - "Auto mode setting".
  - If mode "Manual" is selected, select "Heating". If this is not enough, also select "Additional heat".
- Too low set value on the automatic heating control.
  - Adjust via the smart guide or home screen "Heating"
  - If the room temperature is only low in cold weather, the curve slope in menu 1.30.1 - "Curve, heating" may need to be adjusted upwards.
- Too low or no operating prioritisation of heat.
  - Enter menu 7.1.10.1 - "Operating prioritisation" and increase the time for when heating is to be prioritised. Note that if the time for heating is increased, the time for hot water production is reduced, which can give a smaller amount of hot water.
- "Holiday" activated in menu 6 - "Scheduling".
  - Enter menu 6 and deactivate.
- External switch for changing room temperature activated.
  - Check any external switches.
- Air in the climate system.
  - Vent the climate system.
- Closed valves (QM31), (QM32) to the climate system.
  - Open the valves.
- Electricity price control with considerable impact.
  - Enter menu 4.2.5.1- "Electricity prices" and adjust the setting for the electricity price.

HIGH ROOM TEMPERATURE

- Too high set value on the automatic heating control.
  - Adjust via the smart guide or home screen "Heating"
  - If the room temperature is only high in cold weather, the curve slope in menu 1.30.1 - "Curve, heating" may need to be adjusted downwards.
- External switch for changing room temperature activated.
  - Check any external switches.

UNEVEN ROOM TEMPERATURE.

- Incorrectly set heating curve.
  - Fine-tune the heating curve in menu 1.30.1.
- Too high set value on "DOT"..
  - Enter menu 7.1.6.2 - "Flow settings, climate sys" and reduce the value of "DOT".
- Uneven flow over the radiators.
  - Adjust the flow distribution over the radiators.
- Electricity price control with considerable impact.
  - Enter menu 4.2.5.1- "Electricity prices" and adjust the setting for the electricity price.

LOW SYSTEM PRESSURE

- Not enough water in the climate system.
  - Fill the climate system with water and check for leaks (see chapter "Filling and venting").

THE COMPRESSOR DOES NOT START

- There is no heating or hot water demand, nor cooling demand (accessory is required for cooling).
  - S1257 does not call on heating, hot water or cooling.
- Compressor blocked due to the temperature conditions.
  - Wait until the temperature is within the product's working range.
- Minimum time between compressor starts has not been reached.
  - Wait for at least 30 minutes and then check if the compressor has started.
- Alarm tripped.
  - Follow the display instructions.

WHINING NOISE IN THE RADIATORS

- Closed thermostats in the rooms and incorrectly set heating curve.
  - Set the thermostats to max in as many rooms as possible. Fine-tune the heating curve via home screen heating, rather than choking the thermostats.
- Circulation pump speed set too high.
  - Go to menu 7.1.2.2 (Pump speed heating medium GP1) and reduce the speed of the circulation pump.
- Uneven flow over the radiators.
  - Adjust the flow distribution between the radiators.

Accessories

Detailed information about the accessories and complete accessories list available at nibe.eu.

Not all accessories are available on all markets.

ACTIVE/PASSIVE COOLING IN 4-PIPE SYSTEM ACS 45

ACS 45 is an accessory that makes it possible for S1257 to control the production of heating and cooling independently of each other.

Part no 067 195

ACTIVE/PASSIVE COOLING HPAC S40

The accessory HPAC S40 is a climate exchange module that is used to supply the building with active and passive cooling.

DOCKING KIT PVT 40

PVT 40 enables S1257 to use PVT-panels as brine-source.

Part no. 057 245

ENERGY MEASUREMENT KIT EMK 300

This accessory is installed externally and used to measure the amount of energy that is supplied to the hot water/heating/cooling for the property.

Cu pipe Ø22.

Part no. 067 314

EXTERNAL ELECTRIC ADDITIONAL HEAT ELK

This accessory requires accessory board AXC 40 (step controlled additional heat).

ELK 15

15 kW, 3 x 400 V
Part no. 069 022

ELK 213

7–13 kW, 3 x 400 V
Part no. 069 500

EXTRA SHUNT GROUP ECS

This accessory is used when S1257 is installed in a property with two or more climate systems that require different supply temperatures.

ECS 40

Max 80 m²

Part no 067 287

ECS 41

Approx. 80-250 m²

Part no 067 288

FREE COOLING PCS 44

This accessory is used when S1257 is installed in an installation with passive cooling.

Part no. 067 296

HUMIDITY AND TEMPERATURE SENSOR HTS 40

This accessory is used to show and regulate humidity and temperatures during both heating and cooling operation.

Part no. 067 538

EXHAUST AIR MODULE FLM S45

FLM S45 is an exhaust air module designed to combine recovery of mechanical exhaust air with ground source heating.

FLM S45

Part no. 067 627

Wall rack BAU 40

Part no. 067 666

HRV UNIT ERS

This accessory is used to supply the dwelling with energy that has been recovered from the ventilation air. The unit ventilates the property and heats the supply air as necessary.

ERS S10-400[1]

Part no. 066 163

ERS 20-250[1]

Part no. 066 068

ERS 30-400[1]

Part no. 066 165

[1] A preheater may be required.

BASE EXTENSION EF 45

This accessory can be used to create a larger area under S1257.

Part no. 067 152

AUXILIARY RELAY

Auxiliary relay is used to control external 1 to 3 phase loads, such as, for example, oil burners, immersion heaters and circulation pumps.

HR 10

Recommended max fuse for control current 10 A.
Part no 067 309

HR 20

Recommended max fuse for control current 20 A.
Part no. 067 972

COMMUNICATION MODULE FOR SOLAR ELECTRICITY EME 20

EME 20 is used to enable communication and control between inverters for solar cells from NIBE and S1257.

Part no. 057 215

PASSIVE COOLING PCM S40/PCM S42

PCM S40/PCM S42 makes it possible to obtain passive cooling from rock, ground water or surface soil collectors.

Part no. 067 625 / 067 626

POOL HEATING POOL 40

POOL 40 is used to enable pool heating with S1257.

Part no 067 062

FILLING VALVE KIT KB

Valve kit for filling brine in the collector hose. Includes particle filter and insulation.

KB 25 (max 13 kW)

Part no. 089 368

KB 32 (max. 30 kW)

Part no. 089 971

ROOM UNIT RMU S40

The room unit is an accessory with a built-in room temperature sensor and humidity sensor, which allows the control and monitoring of S1257 to be carried out in a different part of the property to where it is located.

Part no. 067 650

SOLAR PACKAGE NIBE PV

NIBE PV is a modular system consisting of solar panels, assembly parts and inverters, which is used to produce electricity in-house.

ACCESSORY CARD AXC 40

This accessory is used to enable connection and control of shunt controlled additional heat, step controlled additional heat, external circulation pump or ground water pump.

Part no. 067 060

WIRELESS ACCESSORIES

It is possible to connect wireless accessories from NIBE to S1257, e.g. room, humidity, CO_2 sensors.

TOP CABINET TOC 30

Top cabinet, which conceals any pipes/ventilation ducts.

Height 245 mm

Part no. 067 517

Height 345 mm

Part no. 067 518

Height 385-635 mm

Part no. 067 519

Technical data

Dimensions

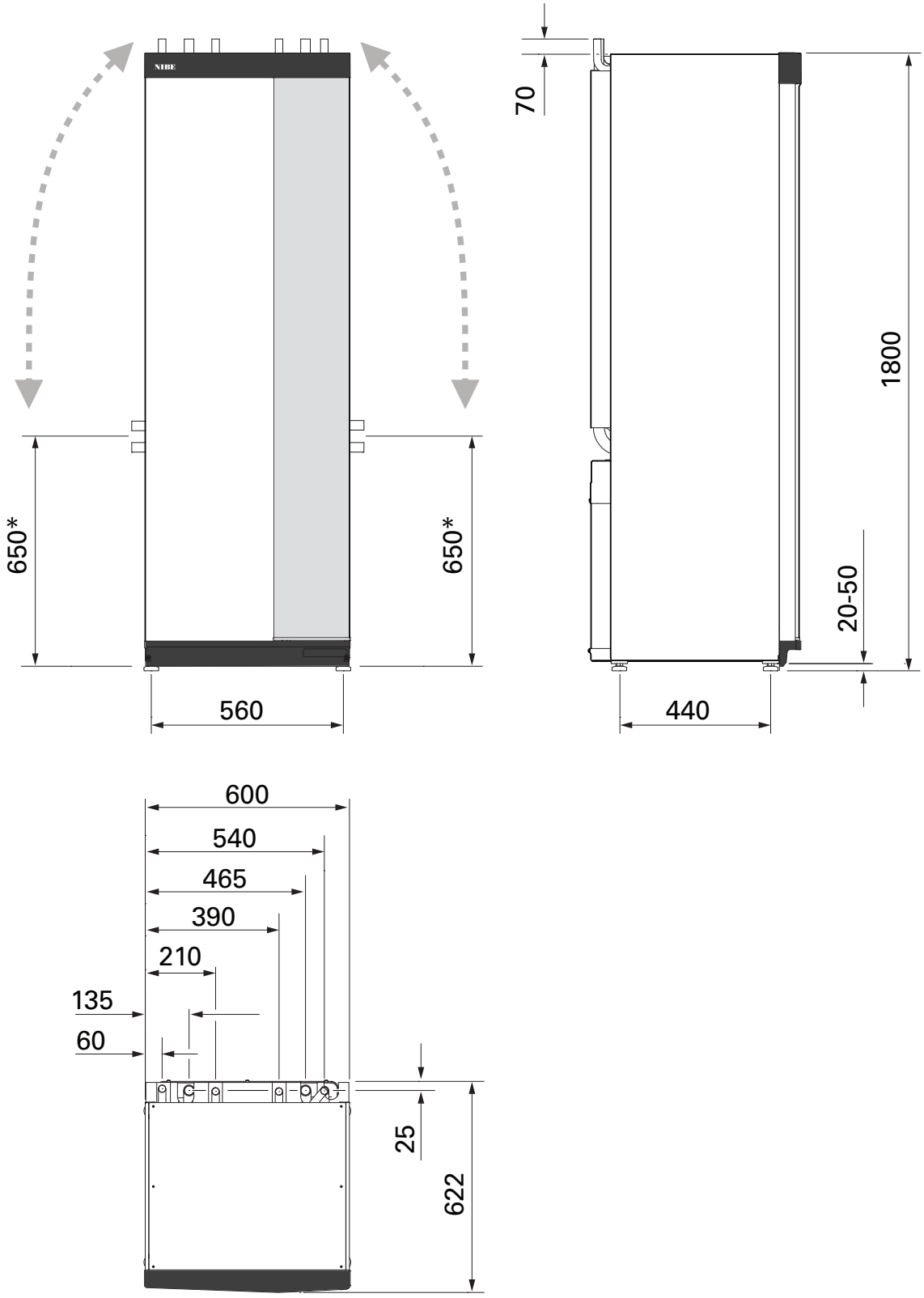

* This dimension applies at 90° angle on the brine pipes (side connection). The dimension can vary approx. ±100 mm vertically as the brine pipes consist in part of flexible pipes.

Electrical data

1X230 V

S1257-8		
Rated voltage		230V ~ 50Hz
Max operating current including 0 kW immersion heater (Recommended fuse rating).	A_{rms}	12,5(16)
Max operating current including 0.5 kW immersion heater (Recommended fuse rating).	A_{rms}	15(16)
Max operating current including 1.5 kW immersion heater (Recommended fuse rating).	A_{rms}	17(20)
Max operating current including 2.5 kW immersion heater (Recommended fuse rating).	A_{rms}	23,5(25)
Max operating current including 4 kW immersion heater (Recommended fuse rating).	A_{rms}	30(32)
Max operating current including 4.5 kW immersion heater (Recommended fuse rating).	A_{rms}	33(40)
Additional power	kW	0.5/1/1.5/2/2.5/3 /3.5/4/4.5

S1257-13		
Rated voltage		230 V ~ 50 Hz
Max operating current including 0 kW immersion heater (Recommended fuse rating).	A_{rms}	21(25)
Max operating current including 1 kW immersion heater (Recommended fuse rating).	A_{rms}	25,5(32)
Max operating current including 2 kW immersion heater (Recommended fuse rating).	A_{rms}	30(32)
Max operating current including 4 kW immersion heater (Recommended fuse rating).	A_{rms}	39(40)
Max operating current including 6 kW immersion heater (Recommended fuse rating).	A_{rms}	47,5(50)
Max operating current including 7 kW immersion heater (Recommended fuse rating).	A_{rms}	52(63)
Additional power	kW	1/2/3/4/5/6/7

3X230 V

S1257-8		
Rated voltage		230V 3 ~ 50Hz
Max operating current including 0 kW immersion heater (Recommended fuse rating).	A_{rms}	12,5(16)
Max operating current including 0,5 kW immersion heater (Recommended fuse rating).	A_{rms}	14(16)
Max operating current including 1,5 kW immersion heater (Recommended fuse rating).	A_{rms}	17(20)
Max operating current including 2,5 kW immersion heater (Recommended fuse rating).	A_{rms}	22(25)
Max operating current including 4 kW immersion heater (Recommended fuse rating).	A_{rms}	20(25)
Max operating current including 4,5 kW immersion heater (Recommended fuse rating).	A_{rms}	24(25)
Additional power	kW	0.5/1/1.5/2/2.5/3 /3.5/4/4.5

S1257-13		
Rated voltage		230V 3 ~ 50Hz
Max operating current including 0 kW immersion heater (Recommended fuse rating).	A_{rms}	21(25)
Max operating current including 2 kW immersion heater (Recommended fuse rating).	A_{rms}	27(32)
Max operating current including 4 kW immersion heater (Recommended fuse rating).	A_{rms}	27(32)
Max operating current including 6 kW immersion heater (Recommended fuse rating).	A_{rms}	36(40)
Max operating current including 9 kW immersion heater (Recommended fuse rating).	A_{rms}	45(50)
Additional power	kW	2/4/6/9

3X400 V

S1257-8		
Rated voltage		400V 3N ~ 50Hz
Max operating current including 0 kW immersion heater (Recommended fuse rating).	A_{rms}	12,5(16)
Max operating current including 0.5 – 6.5 kW immersion heater (Recommended fuse rating).	A_{rms}	16,2(16)
Additional power	kW	0.5/1/1.5/2/2.5/3 /3.5/4/4.5/5/5.5/6/6.5

S1257-13		
Rated voltage		400V 3N ~ 50Hz
Max operating current including 0 kW immersion heater (Recommended fuse rating).	A_{rms}	8(16)
Max operating current including 1 kW immersion heater (Recommended fuse rating).	A_{rms}	11(16)
Max operating current including 2 – 4 kW immersion heater (Recommended fuse rating).	A_{rms}	17(20)
Max operating current including 5 – 7 kW immersion heater (Recommended fuse rating).	A_{rms}	20(25)
Max operating current including 9 kW immersion heater, requires reconnection (Recommended fuse rating).	A_{rms}	22,5(25)
Additional power	kW	1/2/3/4/5/6/7 (switchable to 2/4/6/9)

Technical specifications

Model		S1257-8	S1257-13
Output data according to EN 14511			
		Minimum / Medium / Maximum	Minimum / Medium / Maximum
0/35			
Heating capacity (P_H)	kW	1,54 / 4,46 / 7,89	2,3 / 7,6 / 13,3
Supplied power (P_E)	kW	0,32 / 0,92 / 1,85	0,6 / 1,6 / 3,1
COP	-	4,81 / 4,83 / 4,28	4,2 / 4,6 / 4,3
0/45			
Heating capacity (P_H)	kW	1,42 / 4,15 / 7,58	2,1 / 7,2 / 12,0
Supplied power (P_E)	kW	0,39 / 1,09 / 2,08	0,7 / 1,9 / 3,5
COP	-	3,66 / 3,82 / 3,64	3,1 / 3,7 / 3,4
0/55			
Heating capacity (P_H)	kW	1,29 / 3,95 / 7,24	2,0 / 6,7 / 11,4
Supplied power (P_E)	kW	0,46 / 1,26 / 2,31	0,8 / 2,1 / 3,9
COP	-	2,81 / 3,13 / 3,13	2,5 / 3,2 / 2,9
10/35			
Heating capacity (P_H)	kW	2,06 / 5,98 / 10,57	3,2 / 10,1 / 15,3
Supplied power (P_E)	kW	0,30 / 0,90 / 1,86	0,5 / 1,6 / 3,1
COP	-	6,82 / 6,68 / 5,69	6,0 / 6,4 / 4,9
10/45			
Heating capacity (P_H)	kW	1,95 / 5,60 / 10,14	2,9 / 9,5 / 14,8
Supplied power (P_E)	kW	0,38 / 1,11 / 2,21	0,7 / 2,0 / 3,8
COP	-	5,09 / 5,03 / 4,60	4,3 / 4,8 / 3,9
10/55			
Heating capacity (P_H)	kW	1,82 / 5,29 / 9,77	2,8 / 9,0 / 13,5
Supplied power (P_E)	kW	0,48 / 1,33 / 2,49	0,8 / 2,3 / 4,3
COP	-	3,81 / 3,97 / 3,93	3,3 / 3,9 / 3,1

Model		S1257-8	S1257-13
Output data according to EN 14511			
Heating capacity (P_H)	kW	1.5 – 8	2 – 13
SCOP according to EN 14825			
Rated heating output ($P_{designh}$)	kW	6.5	11,7
SCOP cold climate, 35 °C / 55 °C		5,94 / 4,48	5,66 / 4,37
SCOP average climate, 35 °C / 55 °C		5,72 / 4,31	5,45 / 4,21
Energy rating, average climate			
The product's room heating efficiency class 35 °C / 55 °C [1]		A+++ / A+++	A+++ / A+++
The system's room heating efficiency class 35 °C / 55 °C [2]		A+++ / A+++	A+++ / A+++
Efficiency class hot water heating / declared tap profile [3]		A+ / XL	A+ / XL
Noise			
Sound power level $(L_{WA})_{EN\ 12102}$ at 0/35 [4]	dB(A)	38 - 45	42 - 46
Sound pressure level (L_{PA}) calculated values according to EN ISO 11203 at 0/35 and 1m range	dB(A)	23 - 30	27 - 31
Electrical data			
Rated power, brine pump	W	90	200
Rated power, heating medium pump	W	63	63
Compressor starting current	A_{rms}	0,85	0,7
Enclosure class		IPX1B	
Residual current device (RCD), type		F eller B	F eller B
Equipment Compliant with IEC 61000-3-12			
The product's connections meet the requirements of IEC 61000-3-3			
WLAN			
2.412 - 2.484 GHz max power	dBm	11	
Wireless units			
2.405 - 2.480 GHz max power	dBm	4	
Refrigerant circuit			
Type of refrigerant		R290	
GWP refrigerant		0.02	
Filling amount	kg	0,35	0,54
CO_2 equivalent	kg	0,0	0,0
Cut-out value pressostat HP	MPa (bar)	3.15 (31.5)	
Compressor oil			
Oil type		PAG	
Oil volume	l	0.30	0.75
Brine circuit			
Min/max system pressure brine	MPa (bar)	0.05 (0.5) / 0.45 (4.5)	
Flow at Pdesignh [5]	l/s	0,4	0,7
Max external available pressure at Pdesignh [5]	kPa	55	86
Min/Max incoming Brine temp	°C	see diagram	
Min./max. incoming brine temp., water	°C	see diagram	
Min. outgoing brine temp.	°C	-12	
Min. outgoing brine temp., water	°C	-0	
Heating medium circuit			
Min/Max system pressure heating medium	MPa (bar)	0.05 (0.5) / 0.45 (4.5)	
Flow at Pdesignh [5] [6]	l/s	0.16	0,28
Max external available pressure at Pdesignh [5]	kPa	72	68
Min/max HM-temp	°C	see diagram	
Safety valve			
Safety ventilation Ø	mm	50	
Min. airflow	l/s	7	
Pipe connections			

Model		S1257-8	S1257-13
Brine ext diam	mm	28	28
Heating medium ext diam	mm	22	28
Hot water connection external diam	mm	22	
Cold water connection external diam	mm	22	
Hot water circulation (VVC), ext. diam.	mm	22	22
Hot water and heating section			
Volume coil (Cu/R/E)	l	8.0 / 8.0 / 5.0	
Volume, water heater (Cu/R/E)	l	178 / 176 / 178	
Max pressure in water heater	MPa (bar)	1.0 (10)	
Capacity, hot water heating according to EN 16147			
Tap volume 40°C in comfort mode Small, Medium, Large	l	235 / 250 / 275	235 / 250 / 275
COP_{DHW} (tap profile XL) comfort mode Small		3.0	3.0
Heat loss (P_{es})	W	31,4	31,4
Dimensions and weight			
Width x Depth x Height	mm	600 x 620 x 1,500	
Ceiling height [7]	mm	1,670	
Weight complete heat pump (Cu/R/E) [8]	kg	209 / 228 / 188	234 / 254 / 212
Weight only cooling module	kg	82	230 V: 94 400 V: 101
Miscellaneous			
Part no., 1x230 V (R)		065 792	065 808
Part no., 3x230 V (R)		065 787	065 802
Part no., 3x400 V (Cu/R/E)		065 784 / 065 785 / 065 786	065 799 / 065 800 / 065 801

1 Scale for the product's efficiency class room heating: A+++ to D.
2 Scale for the system's efficiency class room heating: A+++ to G. Reported efficiency for the system takes the product's temperature regulator into account.
3 Scale for efficiency class hot water: A+ to F.
4 Depending on compressor speed.
5 Brine in 0°C / Water out 45°C²
6 At Delta T=10°C
7 With feet removed, the required ceiling height is approx. 1,950 mm.
8 Cu: copper, R: stainless steel, E: enamel

WORKING RANGE HEAT PUMP, COMPRESSOR OPERATION

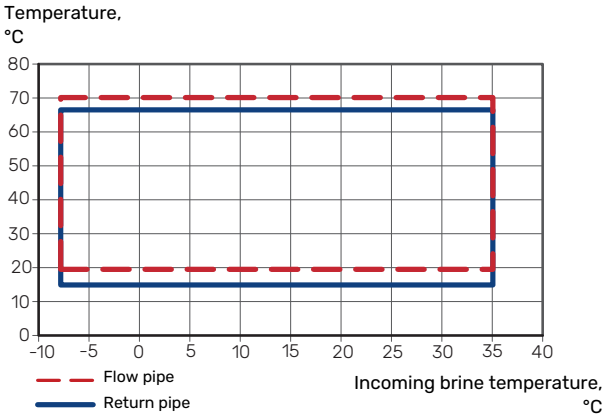

SAFETY VALVE

Pipe and hose routing with pipes that are not internally smooth gives a higher pressure drop and may require a larger diameter.

50 mm PVC

One 90 ° bend can be replaced by 2x45 ° bends.

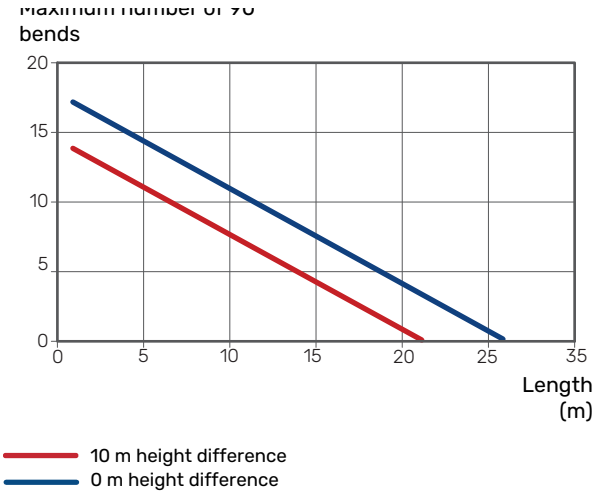

63 mm Spiro

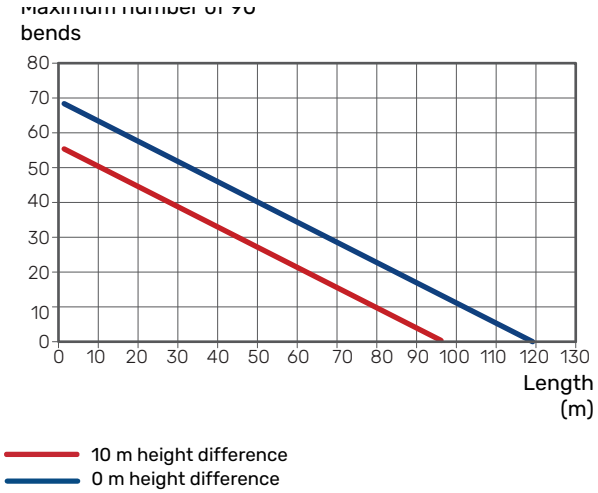
Maximum number of 90 bends
80
70
60
50
40
30
20
10
0
0 10 20 30 40 50 60 70 80 90 100 110 120 130
Length (m)
10 m height difference
0 m height difference

Energy labelling

INFORMATION SHEET

Supplier		NIBE	
Model		**S1257-8 1x230V**	**S1257-13 1x230V**
Temperature application	°C	35 / 55	35 / 55
Declared load profile for water heating		XL	XL
Seasonal space heating energy efficiency class, average climate		A+++ / A+++	A+++ / A+++
Water heating energy efficiency class, average climate		A+	A+
Rated heat output ($P_{designh}$), average climate	kW	7 / 7	12 / 12
Annual energy consumption space heating, average climate	kWh	2,345 / 3,113	4,356 / 5,708
Annual energy consumption water heating, average climate	kWh	1,236	1,234
Seasonal space heating energy efficiency, average climate	%	221 / 165	214 / 161
Water heating energy efficiency, average climate	%	136	136
Sound power level L_{WA} indoors	dB	36	43
Rated heat output ($P_{designh}$), cold climate	kW	7 / 7	12 / 12
Rated heat output ($P_{designh}$), warm climate	kW	7 / 7	12 / 12
Annual energy consumption space heating, cold climate	kWh	2,693 / 3,576	5,082 / 6,601
Annual energy consumption water heating, cold climate	kWh	1,236	1,234
Annual energy consumption space heating, warm climate	kWh	1,520 / 1,996	2,850 / 3,691
Annual energy consumption water heating, warm climate	kWh	1,236	1,234
Seasonal space heating energy efficiency, cold climate	%	230 / 171	219 / 167
Water heating energy efficiency, cold climate	%	136	136
Seasonal space heating energy efficiency, warm climate	%	220 / 166	211 / 161
Water heating energy efficiency, warm climate	%	136	136
Sound power level L_{WA} outdoors	dB	-	-

Supplier		NIBE	
Model		**S1257-8 3x230V**	**S1257-13 3x230V**
Temperature application	°C	35 / 55	35 / 55
Declared load profile for water heating		XL	XL
Seasonal space heating energy efficiency class, average climate		A+++ / A+++	A+++ / A+++
Water heating energy efficiency class, average climate		A+	A+
Rated heat output ($P_{designh}$), average climate	kW	7 / 7	12 / 12
Annual energy consumption space heating, average climate	kWh	2,345 / 3,113	4,356 / 5,708
Annual energy consumption water heating, average climate	kWh	1,236	1,234
Seasonal space heating energy efficiency, average climate	%	221 / 165	214 / 161
Water heating energy efficiency, average climate	%	136	136
Sound power level L_{WA} indoors	dB	36	43
Rated heat output ($P_{designh}$), cold climate	kW	7 / 7	12 / 12
Rated heat output ($P_{designh}$), warm climate	kW	7 / 7	12 / 12
Annual energy consumption space heating, cold climate	kWh	2,693 / 3,576	5,082 / 6,601
Annual energy consumption water heating, cold climate	kWh	1,236	1,234
Annual energy consumption space heating, warm climate	kWh	1,520 / 1,996	2,850 / 3,691
Annual energy consumption water heating, warm climate	kWh	1,236	1,234
Seasonal space heating energy efficiency, cold climate	%	230 / 171	219 / 167
Water heating energy efficiency, cold climate	%	136	136
Seasonal space heating energy efficiency, warm climate	%	220 / 166	211 / 161
Water heating energy efficiency, warm climate	%	136	136
Sound power level L_{WA} outdoors	dB	-	-

Supplier		NIBE	
Model		**S1257-8 3x400V**	**S1257-13 3x400V**
Temperature application	°C	35 / 55	35 / 55
Declared load profile for water heating		XL	XL
Seasonal space heating energy efficiency class, average climate		A+++ / A+++	A+++ / A+++
Water heating energy efficiency class, average climate		A+	A+
Rated heat output ($P_{designh}$), average climate	kW	6.5	11,7
Annual energy consumption space heating, average climate	kWh	2,345 / 3,113	4,356 / 5,708
Annual energy consumption water heating, average climate	kWh	1,236	1,234
Seasonal space heating energy efficiency, average climate	%	221 / 165	214 / 161
Water heating energy efficiency, average climate	%	136	136
Sound power level L_{WA} indoors	dB	36	43
Rated heat output ($P_{designh}$), cold climate	kW	7 / 7	12 / 12
Rated heat output ($P_{designh}$), warm climate	kW	7 / 7	12 / 12
Annual energy consumption space heating, cold climate	kWh	2,693 / 3,576	5,082 / 6,601
Annual energy consumption water heating, cold climate	kWh	1,236	1,234
Annual energy consumption space heating, warm climate	kWh	1,520 / 1,996	2,850 / 3,691
Annual energy consumption water heating, warm climate	kWh	1,236	1,234
Seasonal space heating energy efficiency, cold climate	%	230 / 171	219 / 167
Water heating energy efficiency, cold climate	%	136	136
Seasonal space heating energy efficiency, warm climate	%	220 / 166	211 / 161
Water heating energy efficiency, warm climate	%	136	136
Sound power level L_{WA} outdoors	dB	-	-

DATA FOR ENERGY EFFICIENCY OF THE PACKAGE

Model		S1257-8 1x230V	S1257-13 1x230V
Temperature application	°C	35 / 55	35 / 55
Controller, class		VI	
Controller, contribution to efficiency	%	4	
Seasonal space heating energy efficiency of the package, average climate	%	225 / 169	218 / 165
Seasonal space heating energy efficiency class of the package, average climate		**A+++ / A+++**	**A+++ / A+++**
Seasonal space heating energy efficiency of the package, cold climate	%	234 / 175	223 / 171
Seasonal space heating energy efficiency of the package, warm climate	%	224 / 170	215 / 165

Model		S1257-8 3x230V	S1257-13 3x230V
Temperature application	°C	35 / 55	35 / 55
Controller, class		VI	
Controller, contribution to efficiency	%	4	
Seasonal space heating energy efficiency of the package, average climate	%	225 / 169	218 / 165
Seasonal space heating energy efficiency class of the package, average climate		**A+++ / A+++**	**A+++ / A+++**
Seasonal space heating energy efficiency of the package, cold climate	%	234 / 175	223 / 171
Seasonal space heating energy efficiency of the package, warm climate	%	224 / 170	215 / 165

Model		S1257-8 3x400V	S1257-13 3x400V
Temperature application	°C	35 / 55	35 / 55
Controller, class		VI	
Controller, contribution to efficiency	%	4	
Seasonal space heating energy efficiency of the package, average climate	%	225 / 169	218 / 165
Seasonal space heating energy efficiency class of the package, average climate		**A+++ / A+++**	**A+++ / A+++**
Seasonal space heating energy efficiency of the package, cold climate	%	234 / 175	223 / 171
Seasonal space heating energy efficiency of the package, warm climate	%	224 / 170	215 / 165

The reported efficiency of the package also takes the controller into account. If an external supplementary boiler or solar heating is added to the package, the overall efficiency of the package should be recalculated.

TECHNICAL DOCUMENTATION

Model		S1257-8 1x230V					
Type of heat pump		☐ Air-water ☐ Exhaust-water ☒ Brine-water ☐ Water-water					
Low-temperature heat pump		☐ Yes ☒ No					
Integrated immersion heater for additional heat		☒ Yes ☐ No					
Heat pump combination heater		☒ Yes ☐ No					
Climate		☒ Average ☐ Cold ☐ Warm					
Temperature application		☒ Medium (55°C) ☐ Low (35°C)					
Applied standards		EN-14825, EN-16147 & EN-12102					
Rated heat output	Prated	6,5	kW	*Seasonal space heating energy efficiency*	η_s	165	%
Declared capacity for space heating at part load and at outdoor temperature Tj				*Declared coefficient of performance for space heating at part load and at outdoor temperature Tj*			
Tj = -7 °C	Pdh	5.8	kW	Tj = -7 °C	COPd	3.34	-
Tj = +2 °C	Pdh	3.5	kW	Tj = +2 °C	COPd	4.30	-
Tj = +7 °C	Pdh	2.2	kW	Tj = +7 °C	COPd	4.98	-
Tj = +12 °C	Pdh	1.6	kW	Tj = +12 °C	COPd	5.22	-
Tj = biv	Pdh	6.6	kW	Tj = biv	COPd	3.14	-
Tj = TOL	Pdh	6.6	kW	Tj = TOL	COPd	3.14	-
Tj = -15 °C (if TOL < -20 °C)	Pdh		kW	Tj = -15 °C (if TOL < -20 °C)	COPd		-
Bivalent temperature	T_{biv}	-10	°C	Min. outdoor air temperature	TOL	-10	°C
Cycling interval capacity	Pcych		kW	Cycling interval efficiency	COPcyc		-
Degradation coefficient	Cdh	0.97	-	Max supply temperature	WTOL	70	°C
Power consumption in modes other than active mode				*Additional heat*			
Off mode	P_{OFF}	0.003	kW	Rated heat output	Psup	0.0	kW
Thermostat-off mode	P_{TO}	0.009	kW				
Standby mode	P_{SB}	0.010	kW	Type of energy input	Electric		
Crankcase heater mode	P_{CK}	0.001	kW				
Other items							
Capacity control	Variable			Rated airflow (air-water)			m³/h
Sound power level, indoors/outdoors	L_{WA}	36 / -	dB	Nominal heating medium flow			m³/h
Annual energy consumption	Q_{HE}	3,113	kWh	Brine flow brine-water or water-water heat pumps		0.68	m³/h
For heat pump combination heater							
Declared load profile for water heating	XL			*Water heating energy efficiency*	η_{wh}	136	%
Daily energy consumption	Q_{elec}	5.850	kWh	Daily fuel consumption	Q_{fuel}		kWh
Annual energy consumption	AEC	1,236	kWh	Annual fuel consumption	AFC		GJ
Contact information	*NIBE Energy Systems – Box 14 – Hannabadsvägen 5 – 285 21 Markaryd – Sweden*						

Model		S1257-13 1x230V					
Type of heat pump		☐ Air-water ☐ Exhaust-water ☒ Brine-water ☐ Water-water					
Low-temperature heat pump		☐ Yes ☒ No					
Integrated immersion heater for additional heat		☒ Yes ☐ No					
Heat pump combination heater		☒ Yes ☐ No					
Climate		☒ Average ☐ Cold ☐ Warm					
Temperature application		☒ Medium (55°C) ☐ Low (35°C)					
Applied standards		EN-14825, EN-16147 & EN-12102					
Rated heat output	Prated	11,7	kW	*Seasonal space heating energy efficiency*	η_s	161	%
Declared capacity for space heating at part load and at outdoor temperature Tj				*Declared coefficient of performance for space heating at part load and at outdoor temperature Tj*			
Tj = -7 °C	Pdh	10.5	kW	Tj = -7 °C	COPd	3.32	-
Tj = +2 °C	Pdh	6.5	kW	Tj = +2 °C	COPd	4.30	-
Tj = +7 °C	Pdh	3.9	kW	Tj = +7 °C	COPd	4.82	-
Tj = +12 °C	Pdh	2.5	kW	Tj = +12 °C	COPd	4.90	-
Tj = biv	Pdh	11.8	kW	Tj = biv	COPd	3.04	-
Tj = TOL	Pdh	11.9	kW	Tj = TOL	COPd	3.04	-
Tj = -15 °C (if TOL < -20 °C)	Pdh		kW	Tj = -15 °C (if TOL < -20 °C)	COPd		-
Bivalent temperature	T_{biv}	-10	°C	Min. outdoor air temperature	TOL	-10	°C
Cycling interval capacity	Pcych		kW	Cycling interval efficiency	COPcyc		-
Degradation coefficient	Cdh	0.98	-	Max supply temperature	WTOL	0	°C
Power consumption in modes other than active mode				*Additional heat*			
Off mode	P_{OFF}	0.004	kW	Rated heat output	Psup	0.0	kW
Thermostat-off mode	P_{TO}	0.010	kW				
Standby mode	P_{SB}	0.010	kW	Type of energy input	Electric		
Crankcase heater mode	P_{CK}	0.010	kW				
Other items							
Capacity control	Variable			Rated airflow (air-water)			m³/h
Sound power level, indoors/outdoors	L_{WA}	43 / -	dB	Nominal heating medium flow			m³/h
Annual energy consumption	Q_{HE}	5,708	kWh	Brine flow brine-water or water-water heat pumps			m³/h
For heat pump combination heater							
Declared load profile for water heating	XL			*Water heating energy efficiency*	η_{wh}	136	%
Daily energy consumption	Q_{elec}	5.620	kWh	Daily fuel consumption	Q_{fuel}		kWh
Annual energy consumption	AEC	1,234	kWh	Annual fuel consumption	AFC		GJ
Contact information	*NIBE Energy Systems – Box 14 – Hannabadsvägen 5 – 285 21 Markaryd – Sweden*						

Model		S1257-8 3x230V					
Type of heat pump		☐ Air-water ☐ Exhaust-water ☒ Brine-water ☐ Water-water					
Low-temperature heat pump		☐ Yes ☒ No					
Integrated immersion heater for additional heat		☒ Yes ☐ No					
Heat pump combination heater		☒ Yes ☐ No					
Climate		☒ Average ☐ Cold ☐ Warm					
Temperature application		☒ Medium (55°C) ☐ Low (35°C)					
Applied standards		EN-14825, EN-16147 & EN-12102					
Rated heat output	Prated	6,5	kW	*Seasonal space heating energy efficiency*	η_s	165	%
Declared capacity for space heating at part load and at outdoor temperature Tj				*Declared coefficient of performance for space heating at part load and at outdoor temperature Tj*			
Tj = -7 °C	Pdh	5.8	kW	Tj = -7 °C	COPd	3.34	-
Tj = +2 °C	Pdh	3.5	kW	Tj = +2 °C	COPd	4.30	-
Tj = +7 °C	Pdh	2.2	kW	Tj = +7 °C	COPd	4.98	-
Tj = +12 °C	Pdh	1.6	kW	Tj = +12 °C	COPd	5.22	-
Tj = biv	Pdh	6.6	kW	Tj = biv	COPd	3.14	-
Tj = TOL	Pdh	6.6	kW	Tj = TOL	COPd	3.14	-
Tj = -15 °C (if TOL < -20 °C)	Pdh		kW	Tj = -15 °C (if TOL < -20 °C)	COPd		-
Bivalent temperature	T_{biv}	-10	°C	Min. outdoor air temperature	TOL	-10	°C
Cycling interval capacity	Pcych		kW	Cycling interval efficiency	COPcyc		-
Degradation coefficient	Cdh	0.97	-	Max supply temperature	WTOL	70	°C
Power consumption in modes other than active mode				*Additional heat*			
Off mode	P_{OFF}	0.003	kW	Rated heat output	Psup	0.0	kW
Thermostat-off mode	P_{TO}	0.009	kW				
Standby mode	P_{SB}	0.010	kW	Type of energy input	Electric		
Crankcase heater mode	P_{CK}	0.001	kW				
Other items							
Capacity control	Variable			Rated airflow (air-water)			m³/h
Sound power level, indoors/outdoors	L_{WA}	36 / -	dB	Nominal heating medium flow			m³/h
Annual energy consumption	Q_{HE}	3,113	kWh	Brine flow brine-water or water-water heat pumps		0.68	m³/h
For heat pump combination heater							
Declared load profile for water heating	XL			*Water heating energy efficiency*	η_{wh}	136	%
Daily energy consumption	Q_{elec}	5.850	kWh	Daily fuel consumption	Q_{fuel}		kWh
Annual energy consumption	AEC	1,236	kWh	Annual fuel consumption	AFC		GJ
Contact information	*NIBE Energy Systems – Box 14 – Hannabadsvägen 5 – 285 21 Markaryd – Sweden*						

Model		S1257-13 3x230V					
Type of heat pump		☐ Air-water ☐ Exhaust-water ☒ Brine-water ☐ Water-water					
Low-temperature heat pump		☐ Yes ☒ No					
Integrated immersion heater for additional heat		☒ Yes ☐ No					
Heat pump combination heater		☒ Yes ☐ No					
Climate		☒ Average ☐ Cold ☐ Warm					
Temperature application		☒ Medium (55°C) ☐ Low (35°C)					
Applied standards		EN-14825, EN-16147 & EN-12102					
Rated heat output	Prated	11,7	kW	*Seasonal space heating energy efficiency*	η_s	161	%
Declared capacity for space heating at part load and at outdoor temperature Tj				*Declared coefficient of performance for space heating at part load and at outdoor temperature Tj*			
Tj = -7 °C	Pdh	10.5	kW	Tj = -7 °C	COPd	3.32	-
Tj = +2 °C	Pdh	6.5	kW	Tj = +2 °C	COPd	4.30	-
Tj = +7 °C	Pdh	3.9	kW	Tj = +7 °C	COPd	4.82	-
Tj = +12 °C	Pdh	2.5	kW	Tj = +12 °C	COPd	4.90	-
Tj = biv	Pdh	11.8	kW	Tj = biv	COPd	3.04	-
Tj = TOL	Pdh	11.9	kW	Tj = TOL	COPd	3.04	-
Tj = -15 °C (if TOL < -20 °C)	Pdh		kW	Tj = -15 °C (if TOL < -20 °C)	COPd		-
Bivalent temperature	T_{biv}	-10	°C	Min. outdoor air temperature	TOL	-10	°C
Cycling interval capacity	Pcych		kW	Cycling interval efficiency	COPcyc		-
Degradation coefficient	Cdh	0.98	-	Max supply temperature	WTOL	0	°C
Power consumption in modes other than active mode				*Additional heat*			
Off mode	P_{OFF}	0.004	kW	Rated heat output	Psup	0.0	kW
Thermostat-off mode	P_{TO}	0.010	kW				
Standby mode	P_{SB}	0.010	kW	Type of energy input	Electric		
Crankcase heater mode	P_{CK}	0.010	kW				
Other items							
Capacity control	Variable			Rated airflow (air-water)			m³/h
Sound power level, indoors/outdoors	L_{WA}	43 / -	dB	Nominal heating medium flow			m³/h
Annual energy consumption	Q_{HE}	5,708	kWh	Brine flow brine-water or water-water heat pumps			m³/h
For heat pump combination heater							
Declared load profile for water heating	XL			*Water heating energy efficiency*	η_{wh}	136	%
Daily energy consumption	Q_{elec}	5.620	kWh	Daily fuel consumption	Q_{fuel}		kWh
Annual energy consumption	AEC	1,234	kWh	Annual fuel consumption	AFC		GJ
Contact information	*NIBE Energy Systems – Box 14 – Hannabadsvägen 5 – 285 21 Markaryd – Sweden*						

Model		S1257-8 3x400V					
Type of heat pump		☐ Air-water ☐ Exhaust-water ☒ Brine-water ☐ Water-water					
Low-temperature heat pump		☐ Yes ☒ No					
Integrated immersion heater for additional heat		☒ Yes ☐ No					
Heat pump combination heater		☒ Yes ☐ No					
Climate		☒ Average ☐ Cold ☐ Warm					
Temperature application		☒ Medium (55°C) ☐ Low (35°C)					
Applied standards		EN-14825, EN-16147 & EN-12102					
Rated heat output	Prated	6,5	kW	*Seasonal space heating energy efficiency*	η_s	165	%
Declared capacity for space heating at part load and at outdoor temperature Tj				*Declared coefficient of performance for space heating at part load and at outdoor temperature Tj*			
Tj = -7 °C	Pdh	5.8	kW	Tj = -7 °C	COPd	3.34	-
Tj = +2 °C	Pdh	3.5	kW	Tj = +2 °C	COPd	4.30	-
Tj = +7 °C	Pdh	2.2	kW	Tj = +7 °C	COPd	4.98	-
Tj = +12 °C	Pdh	1.6	kW	Tj = +12 °C	COPd	5.22	-
Tj = biv	Pdh	6.6	kW	Tj = biv	COPd	3.14	-
Tj = TOL	Pdh	6.6	kW	Tj = TOL	COPd	3.14	-
Tj = -15 °C (if TOL < -20 °C)	Pdh		kW	Tj = -15 °C (if TOL < -20 °C)	COPd		-
Bivalent temperature	T_{biv}	-10	°C	Min. outdoor air temperature	TOL	-10	°C
Cycling interval capacity	Pcych		kW	Cycling interval efficiency	COPcyc		-
Degradation coefficient	Cdh	0.97	-	Max supply temperature	WTOL	70	°C
Power consumption in modes other than active mode				*Additional heat*			
Off mode	P_{OFF}	0.003	kW	Rated heat output	Psup	0.0	kW
Thermostat-off mode	P_{TO}	0.009	kW				
Standby mode	P_{SB}	0.010	kW	Type of energy input	Electric		
Crankcase heater mode	P_{CK}	0.001	kW				
Other items							
Capacity control	Variable			Rated airflow (air-water)			m³/h
Sound power level, indoors/outdoors	L_{WA}	36 / -	dB	Nominal heating medium flow			m³/h
Annual energy consumption	Q_{HE}	3,113	kWh	Brine flow brine-water or water-water heat pumps		0.68	m³/h
For heat pump combination heater							
Declared load profile for water heating	XL			*Water heating energy efficiency*	η_{wh}	136	%
Daily energy consumption	Q_{elec}	5.850	kWh	Daily fuel consumption	Q_{fuel}		kWh
Annual energy consumption	AEC	1,236	kWh	Annual fuel consumption	AFC		GJ
Contact information	*NIBE Energy Systems – Box 14 – Hannabadsvägen 5 – 285 21 Markaryd – Sweden*						

Model		S1257-13 3x400V					
Type of heat pump		☐ Air-water ☐ Exhaust-water ☒ Brine-water ☐ Water-water					
Low-temperature heat pump		☐ Yes ☒ No					
Integrated immersion heater for additional heat		☒ Yes ☐ No					
Heat pump combination heater		☒ Yes ☐ No					
Climate		☒ Average ☐ Cold ☐ Warm					
Temperature application		☒ Medium (55°C) ☐ Low (35°C)					
Applied standards		EN-14825, EN-16147 & EN-12102					
Rated heat output	Prated	11,7	kW	*Seasonal space heating energy efficiency*	η_s	161	%
Declared capacity for space heating at part load and at outdoor temperature Tj				*Declared coefficient of performance for space heating at part load and at outdoor temperature Tj*			
Tj = -7 °C	Pdh	10.5	kW	Tj = -7 °C	COPd	3.32	-
Tj = +2 °C	Pdh	6.5	kW	Tj = +2 °C	COPd	4.30	-
Tj = +7 °C	Pdh	3.9	kW	Tj = +7 °C	COPd	4.82	-
Tj = +12 °C	Pdh	2.5	kW	Tj = +12 °C	COPd	4.90	-
Tj = biv	Pdh	11.8	kW	Tj = biv	COPd	3.04	-
Tj = TOL	Pdh	11.9	kW	Tj = TOL	COPd	3.04	-
Tj = -15 °C (if TOL < -20 °C)	Pdh		kW	Tj = -15 °C (if TOL < -20 °C)	COPd		-
Bivalent temperature	T_{biv}	-10	°C	Min. outdoor air temperature	TOL	-10	°C
Cycling interval capacity	Pcych		kW	Cycling interval efficiency	COPcyc		-
Degradation coefficient	Cdh	0.98	-	Max supply temperature	WTOL	0	°C
Power consumption in modes other than active mode				*Additional heat*			
Off mode	P_{OFF}	0.004	kW	Rated heat output	Psup	0.0	kW
Thermostat-off mode	P_{TO}	0.010	kW				
Standby mode	P_{SB}	0.010	kW	Type of energy input	Electric		
Crankcase heater mode	P_{CK}	0.010	kW				
Other items							
Capacity control	Variable			Rated airflow (air-water)			m³/h
Sound power level, indoors/outdoors	L_{WA}	43 / -	dB	Nominal heating medium flow			m³/h
Annual energy consumption	Q_{HE}	5,708	kWh	Brine flow brine-water or water-water heat pumps			m³/h
For heat pump combination heater							
Declared load profile for water heating	XL			*Water heating energy efficiency*	η_{wh}	136	%
Daily energy consumption	Q_{elec}	5.620	kWh	Daily fuel consumption	Q_{fuel}		kWh
Annual energy consumption	AEC	1,234	kWh	Annual fuel consumption	AFC		GJ
Contact information	*NIBE Energy Systems – Box 14 – Hannabadsvägen 5 – 285 21 Markaryd – Sweden*						

Item register

A

Accessories, 71
Alarm, 69
Assembly, 6

B

Brine side, 18
Buffer vessel UKV, 20

C

Checking the magnetite indicator, 64
Climate system, 19
Climate systems and zones, 41
  Control - Introduction, 41
Cold and hot water, 19
  Connecting cold and hot water, 19
Commissioning and adjusting, 32
  Filling and venting, 32
  Start guide, 33
Commissioning and adjustment
  Setting pump speeds, 34
Connecting accessories, 27
Connecting current sensors, 26
Connecting external operating voltage for the control system, 24
Connecting hot water circulation, 20
Connecting sensors, 25
Connecting the climate system, 19
Connections, 24
Control, 38
  Control - Introduction, 38
Control - Introduction, 38
Control - Menus
  Menu 1 - Indoor climate, 42
  Menu 2 - Hot water, 45
  Menu 3 - Info, 47
  Menu 4 - My system, 48
  Menu 5 - Connection, 52
  Menu 6 - Scheduling, 53
  Menu 7 - Installer settings, 54
Cooling module, 14

D

Data for energy efficiency of the system, 83
Delivery and handling, 6
  Assembly, 6
  Drawing out the cooling module, 6
  Installation area, 6
  Removing parts of the insulation, 10
  Removing the covers, 8
  Supplied components, 8
  Transport, 6
Dimensions, 73
Dimensions and pipe connections, 17
DIP switches, 31
Disruption to comfort
  Info menu, 69
Disturbances in comfort
  Alarm, 69
  Manage alarm, 69
  Troubleshooting, 69
Docking alternatives
  Free cooling, 21
  Ground water system, 20
  Pool, 21
  Two or more climate systems, 20
  Ventilation recovery, 20
Draining the climate system, 64
Draining the hot water heater, 64
Drawing out the cooling module, 6, 65

E

Electrical addition - maximum output, 30
  Power steps of the immersion heater, 30
  Switching to maximum electrical output, 31
Electrical cabinets, 14
Electrical connection, 22
  General, 22
Electrical connections
  Connecting accessories, 27
  Connecting external operating voltage for the control system, 24
  Connecting sensors, 25
  Connections, 24
  DIP switches, 31
  Electrical addition - maximum output, 30
  External connection options, 28
  External connections, 25
  External energy meter, 25
  Load monitor, 26
  Multi-installation, 27
  Outdoor sensor, 25
  Power connection, 24
  Room sensor, 25
  Settings, 30
  Tariff control, 24
  Temperature sensor, external flow line, 25
Emptying the brine system, 64
Energy labelling, 80
  Data for energy efficiency of the package, 83
  Information sheet, 80–82
  Technical documentation, 84, 86, 88
External connection options, 28
  Possible selection for AUX inputs, 28
  Possible selection for AUX output (potential free variable relay), 29
External connections, 25
External energy meter, 25

F

Filling and venting, 32
  Filling and venting the brine system, 32
  Filling the hot water heater, 32
Filling and venting the brine system, 32
Filling the hot water heater, 32

H

Helping the circulation pump to start, 65
Help menu, 39

I

Important information, 4
  Marking, 4
Info menu, 69
Information sheet, 80
Inspection of the installation, 5
Installation alternative
  Buffer vessel UKV, 20
  Connecting hot water circulation, 20
  Water heater with immersion heater, 19

Installation area, 6

M

Malfunctions, 69
Manage alarm, 69
Marking, 4
Menu 1 - Indoor climate, 42
Menu 2 - Hot water, 45
Menu 3 - Info, 47
Menu 4 - My system, 48
Menu 5 - Connection, 52
Menu 6 - Scheduling, 53
Menu 7 - Installer settings, 54
Modbus TCP/IP, 67
Multi-installation, 27

N

Navigation
  Help menu, 39

O

Outdoor sensor, 25

P

Pipe and ventilation connections
  Climate system, 19
  Connecting the climate system, 19
Pipe connections, 16
  Brine side, 18
  Cold and hot water
    Connecting cold and hot water, 19
  Dimensions and pipe connections, 17
  General, 16
  Pipe dimensions, 17
  Symbol key, 16
  System diagram, 17
Pipe dimensions, 17
Possible selection for AUX inputs, 28
Possible selection for AUX output (potential free variable relay), 29
Post adjustment and bleeding, 34
  Pump adjustment, automatic operation, 34
  Pump adjustment, manual operation, 34
  Pump capacity diagram, brine side, manual operation, 34
Power connection, 24
Pump adjustment, automatic operation, 34
  Brine side, 34
  Climate system, 34
Pump adjustment, manual operation, 34
  Climate system, 34
Pump capacity diagram, brine side, manual operation, 34

R

Removing the covers, 8
Room sensor, 25

S

Safety information
  Inspection of the installation, 5
  Marking, 4
  Serial number, 4
  Symbols, 4
Serial number, 4
Service, 64
Service actions
  Draining the climate system, 64
  Draining the hot water heater, 64
  Drawing out the cooling module, 65
  Emptying the brine system, 64
  Helping the circulation pump to start, 65
  Modbus TCP/IP, 67
  Temperature sensor data, 65
  USB service outlet, 66
Service measures
  Checking the magnetite indicator, 64
Settings, 30
  Emergency mode, 31
Standby mode, 31
Start guide, 33
Supplied components, 8
Symbol key, 16
Symbols, 4
System diagram, 17

T

Tariff control, 24
Technical data, 73
  Dimensions, 73
  Energy labelling, 80
    Data for energy efficiency of the system, 83
    Information sheet, 80
    Technical documentation, 84
  Technical Data, 76
Technical Data, 76
  Working range heat pump, 78
Technical documentation, 84
Temperature sensor, external flow line, 25
Temperature sensor data, 65
The heat pump's design
  Component list, cooling module, 14
  Component location, cooling module, 14
The heat pump design, 13
  Component list electrical cabinets, 14
  Component location electrical cabinets, 14
  Component locations, 13
  List of components, 13
Topping up the climate system, 32
Transport, 6
Troubleshooting, 69

U

USB service outlet, 66

V

Venting the brine system, 32
Venting the climate system, 32

W

Working range heat pump, 78

Contact information

AUSTRIA
NIBE GmbH
Gahberggasse 11
4861 Schörfling am Attersee
Tel: +43 (0)7662 8963-0
kontakt@nibe.at
nibe.at

CZECH REPUBLIC
Družstevní závody Dražice - strojírna s.r.o.
Dražice 69, 29471 Benátky n. Jiz.
Tel: +420 326 373 801
nibe@nibe.cz
nibe.cz

DENMARK
Vølund Varmeteknik A/S
Industrivej Nord 7B, 7400 Herning
Tel: +45 97 17 20 33
info@volundvt.dk
volundvt.dk

FINLAND
NIBE Energy Systems Oy
Juurakkotie 3, 01510 Vantaa
Tel: +358 (0)9 274 6970
info@nibe.fi
nibe.fi

FRANCE
NIBE Energy Systems France SAS
Zone industrielle RD 28
Rue du Pou du Ciel, 01600 Reyrieux
Tél: 04 74 00 92 92
info@nibe.fr
nibe.fr

GERMANY
NIBE Systemtechnik GmbH
Am Reiherpfahl 3, 29223 Celle
Tel: +49 (0)5141 75 46 -0
info@nibe.de
nibe.de

GREAT BRITAIN
NIBE Energy Systems Ltd
3C Broom Business Park,
Bridge Way, S41 9QG Chesterfield
Tel: +44 (0)330 311 2201
info@nibe.co.uk
nibe.co.uk

NETHERLANDS
NIBE Energietechniek B.V.
Bagven Park 11, 4838 EH Breda
Tel: +31 (0)168 47 77 22
info@nibenl.nl
nibenl.nl

NORWAY
ABK-Qviller AS
Brynsengfaret 6, 0667 Oslo
Tel: (+47) 23 17 05 20
post@abkqviller.no
nibe.no

POLAND
NIBE-BIAWAR Sp. z o.o.
Ul. Prof. Andrzeja Kalicinskiego 1
15-569 Bialystok
Tel: +48 (0)85 66 28 490
biawar.com.pl

SWEDEN
NIBE Energy Systems
Box 14
Hannabadsvägen 5, 285 21 Markaryd
Tel: +46 (0)433-27 30 00
info@nibe.se
nibe.se

SWITZERLAND
NIBE Wärmetechnik c/o ait Schweiz AG
Industriepark, CH-6246 Altishofen
Tel. +41 (0)58 252 21 00
info@nibe.ch
nibe.ch

For countries not mentioned in this list, contact NIBE Sweden or check nibe.eu for more information.

NIBE Energy Systems
Hannabadsvägen 5
Box 14
SE-285 21 Markaryd
info@nibe.se
nibe.eu

IHB EN 2626-1 731712

This is a publication from NIBE Energy Systems. All product illustrations, facts and data are based on the available information at the time of the publication's approval.

NIBE Energy Systems makes reservations for any factual or printing errors in this publication.

©2026 NIBE ENERGY SYSTEMS

731712