Installer manual

Ground source heat pump

NIBE S1256 1x230V



IHB EN 2514-1
931032

Quick guide

NAVIGATION

Select



Most options and functions are activated by lightly pressing on the display with your finger.

Scroll

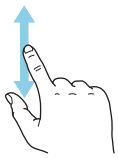

If the menu has several sub-menus, you can see more information by dragging up or down with your finger.

Browse

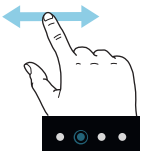

The dots at the bottom edge show that there are more pages.

Drag to the right or left with your finger to browse between the pages.

Smartguide

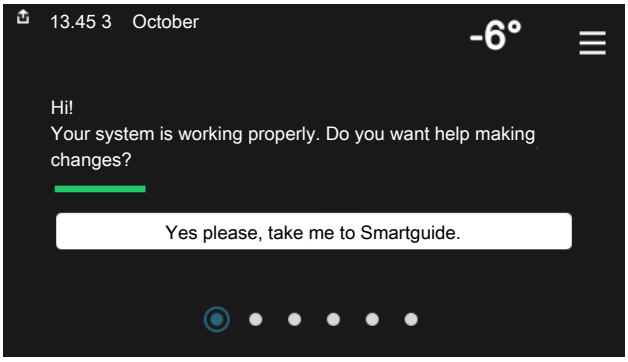

Smartguide helps you both to view information about the current status and to make the most common settings easily. The information that you see depends on the product you have and the accessories that are connected to the product.

Setting the indoor temperature.

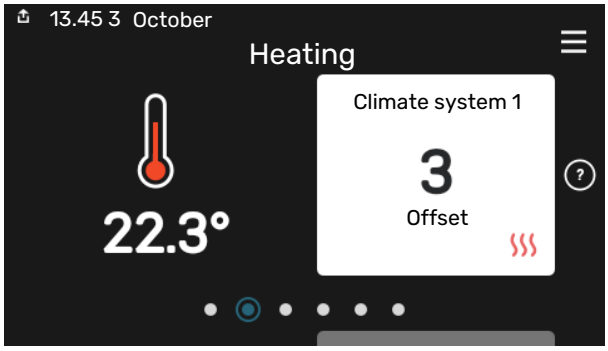

Here, you can set the temperature in the installation's zones.

Increasing hot water temperature

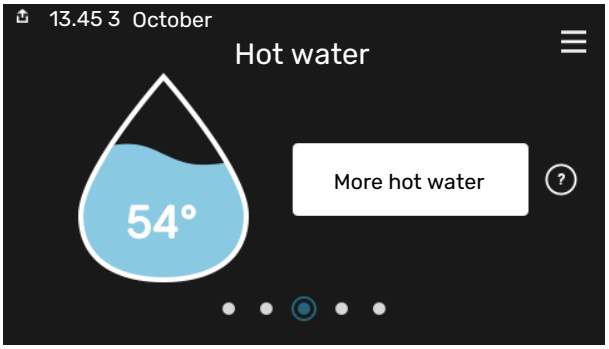

Here, you can start or stop a temporary increase in the hot water temperature.

Product overview



Here, you can find information about product name, the product's serial number, the version of the software and service. When there is new software to download, you can do it here (provided that S1256 is connected to myUplink).

Table of Contents

1 Important information 4
Safety information 4
Symbols 4
Marking 4
Serial number 4
Country specific information 5
Inspection of the installation 6

2 Delivery and handling 7
Transport 7
Assembly 7
Supplied components 8
Handling panels 8
Removing insulation 10

3 The heat pump design 11
General 11
Distribution boxes 12
Cooling module 12

4 Pipe connections 14
General 14
Dimensions and pipe connections 16
Brine side 17
Climate system 18
Cold and hot water 18
Installation alternative 18

5 Electrical connections 21
General 21
Connections 23
Settings 28

6 Commissioning and adjusting 29
Preparations 29
Filling and venting 29
Start-up and inspection 30
Setting the heating curve 33

7 myUplink 36
Specification 36
Connection 36
Range of services 36

8 Control - Introduction 37
Display unit 37
Navigation 38
Menu types 38
Climate systems and zones 40

9 Control - Menus 41
Menu 1 - Indoor climate 41
Menu 2 - Hot water 44
Menu 3 - Info 46
Menu 4 - My system 47
Menu 5 - Connection 51
Menu 6 - Scheduling 52
Menu 7 - Installer settings 53

10 Service 61
Maintenance 61
Service actions 61

11 Disturbances in comfort 67
Info-menu 67
Manage alarm 67
Troubleshooting 67

12 Accessories 69

13 Technical data 71
Dimensions 71
Electrical data 72
Technical specifications 73
Energy labelling 77

Item register 81

Important information

Safety information

This manual describes installation and service procedures for implementation by specialists.

The manual must be left with the customer.

For the latest version of the product's documentation, see nibe.co.uk.

> **NOTE**
>
> Also read the enclosed Safety Manual before starting the installation.

Symbols

Explanation of symbols that may be present in this manual.

> **NOTE**
>
> This symbol indicates danger to person or machine.

> **Caution**
>
> This symbol indicates important information about what you should consider when installing or servicing the installation.

> **TIP**
>
> This symbol indicates tips on how to facilitate using the product.

Marking

Explanation of symbols that may be present on the product's label(s).

Dangerous voltage.

Read the User Manual.

Read the Installer Manual.

Disconnect the voltage supply before starting work.

Serial number

The serial number can be found at the bottom right on S1256, in the display on the home screen "Product overview" and on the type plate (PZ1).

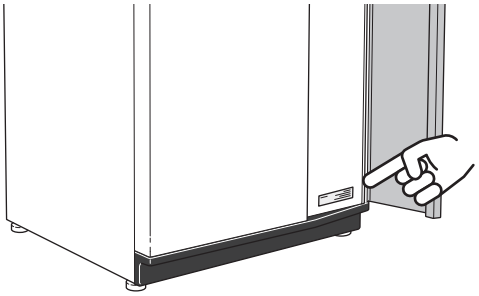

> **Caution**
>
> You need the product's (14 digit) serial number for servicing and support.

Country specific information

UNITED KINGDOM

This installation is subject to building regulation approval, notify the local Authority of intention to install.

Use only manufacturer's recommended replacement parts.

For more information see nibe.co.uk.

Benchmark places responsibilities on both manufacturers and installers. The purpose is to ensure that customers are provided with the correct equipment for their needs, that it is installed, commissioned and serviced in accordance with the manufacturers instructions by competent persons and that it meets the requirements of the appropriate Building Regulations. The Benchmark Checklist can be used to demonstrate compliance with Building Regulations and should be provided to the customer for future reference.

Installers are required to carry out the installation, commissioning and servicing work in accordance with the Benchmark Code of practice which is available from the Heating and Hotwater Industry Council who manage and promote the Scheme. Visit centralheating.co.uk for information.

Warranty and insurance information

Thank you for installing a new NIBE heat pump in your home.

NIBE heat pumps are manufactured in Sweden to the very highest standard so we are pleased to offer our customers a comprehensive guarantee.

The product is guaranteed for 24 months for parts and labour from the date of installation or 33 months from the date of manufacture, whichever is the shorter.

The NIBE guarantee is based on the unit being installed and commissioned by a NIBE accredited installer, serviced every year and the Benchmark documents completed. Where this condition is not met, any chargeable spare parts or components issued within the applicable guarantee period still benefit from a 12 month warranty from the date of issue by the manufacturer.

We recommend the installer completes and returns as soon as possible, your guarantee registration card or completes the guarantee form on the NIBE website, www.nibe.co.uk

Electrical Supply

The heat pump must be permanently connected to a 230 V ~ 50 Hz supply.

All system components shall be of an approved type and all wiring to current I.E.E wiring regulations.

External wiring must be correctly earthed, polarised and in accordance with the relevant standards: Currently this is BS 7671.

Domestic Hot Water

All domestic hot water circuits, connections and fittings must be in accordance with the relevant standards and water supply regulations. It should also be in accordance with the relevant requirements of the Local Authority and the Building Regulations relevant to the location of installation.

BS 8558:2015 Services supplying water for domestic use within buildings and their cartilages.

Water Supply (Water Fitting) Regulations 1999 or The Water Bylaws 2000 (Scotland).

Heating System

The installation of the heat pump should follow best practice as covered in the following:

BS 5449 Forced circulation hot water central heating systems for domestic premises.

BS 15450 Heating systems in buildings – Design of heat pump heating systems.

Inspection of the installation

Current regulations require the heating installation to be inspected before it is commissioned. The inspection must be carried out by a suitably qualified person. In addition, fill in the page for the installation data in the User Manual.

✔	Description	Notes	Signature	Date
Brine side				
	System flushed			
	System vented			
	Antifreeze			
	Level/Expansion vessel			
	Filterball (particle filter)			
	Safety valve			
	Shut off valves			
	Circulation pump setting			
Climate system				
	System flushed			
	System vented			
	Expansion vessel			
	Filterball (particle filter)			
	Safety valve			
	Shut off valves			
	Circulation pump setting			
Electricity				
	Connections			
	Main voltage			
	Phase voltage			
	Fuses heat pump			
	Fuses property			
	Outside sensor			
	Room sensor			
	Safety breaker			
	Earth circuit-breaker			
	Set emergency mode in menu 7.1.8.2			
Miscellaneous				
	Warranty			
	Benchmark checklist			

Delivery and handling

Transport

S1256 should be transported and stored vertically in a dry place. When being moved into a building, S1256 may be leant back 45 °.

Ensure that S1256 has not been damaged during transport.

> **Caution**
>
> The product can be tail heavy.

Remove the outer panels in order to protect them when moving in confined spaces inside buildings.

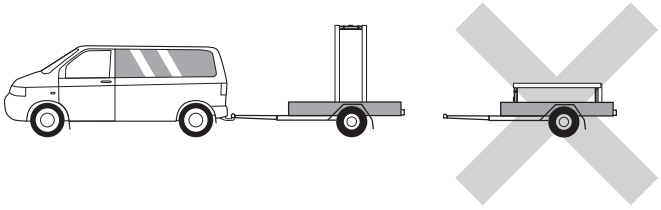

EXTRACTING THE COOLING MODULE

To simplify transport and service, the heat pump can be separated by pulling the cooling module out from the cabinet.

See page 64 for instructions about the separation.

Assembly

- Position S1256 on a solid foundation indoors that withstands water and the weight of the product.
- Use the product's adjustable feet to attain a horizontal and stable set-up.

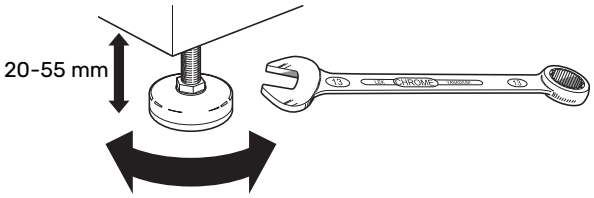

- Since water comes from S1256, the area where S1256 is located must be equipped with floor drainage.
- Install with its back to an outside wall, ideally in a room where noise does not matter, in order to eliminate noise problems. If this is not possible, avoid placing it against a wall behind a bedroom or other room where noise may be a problem.
- Wherever the unit is located, walls to sound sensitive rooms should be fitted with sound insulation.
- Route pipes so they are not fixed to an internal wall that backs on to a bedroom or living room.

INSTALLATION AREA

Leave a free space of 800 mm in front of the product. Approx. 50 mm free space is required on each side, to allow the side panels to be removed (see image). All service on S1256 can be carried out from the front, however the right-hand panel may need to be removed. Leave free space between the heat pump and the wall behind (and any routing of supply cables and pipes), to reduce the risk of any vibrations being propagated.

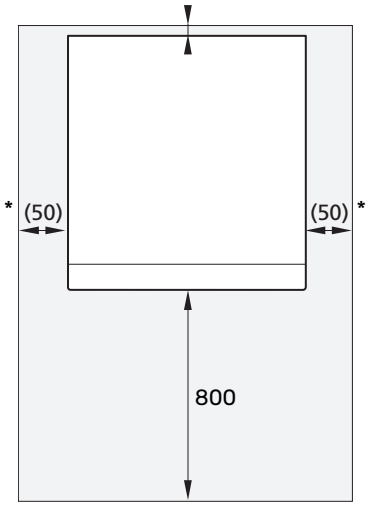

* A normal installation needs 300 – 400 mm (any side) for connection equipment, e.g. level vessel, valves and electrical equipment.

Supplied components

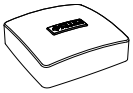

Outdoor temperature sensor (BT1)
1 x



Room sensor(BT50)
1 x



O-rings
8 x

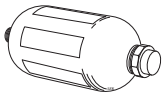

Level vessel (CM2)
1 x

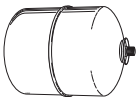

Expansion vessel domestic water with holder (packed separately) (CM4)
1 x

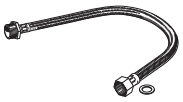

Armoured hose (expansion vessel)
1 x



Filling hose (WN1)
1 x



Tundish (WM3)
2 x

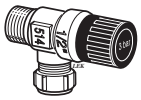

Safety valve (FL3)
0.3 MPa (3 bar)
1 x



Pressure relief valve (QN17)
1 x



Cold water shut-off and expansion relief valve, water heater (FL1)
1 x



Filling valves for the climate system (QM11) and (QM13)
1 x



Filterball (QZ2)
8 kW
1 x G1
1 x G3/4
13 kW
1 x G1
1 x G1 1/4



Compression ring couplings
8 kW
2 x (ø28 x G25)
2 x (ø22 x G20)
13 kW
4 x (ø28 x G25)

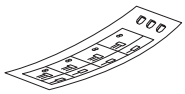

Label for external control voltage for the control system
1 x

LOCATION

The kit of supplied items is placed in packaging on top of the heat pump.

Handling panels

OPEN FRONT HATCH

Press the hatch's top left corner to open it.



REMOVE THE FRONT

1. Remove the screw in the hole next to the on/off button (SF1).

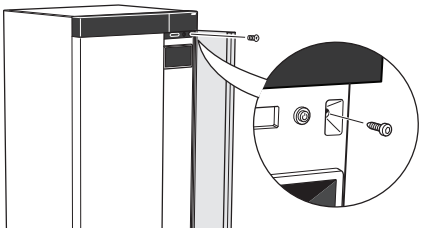

2. Pull the panel's top edge towards you and lift diagonally upwards to remove it from the frame.

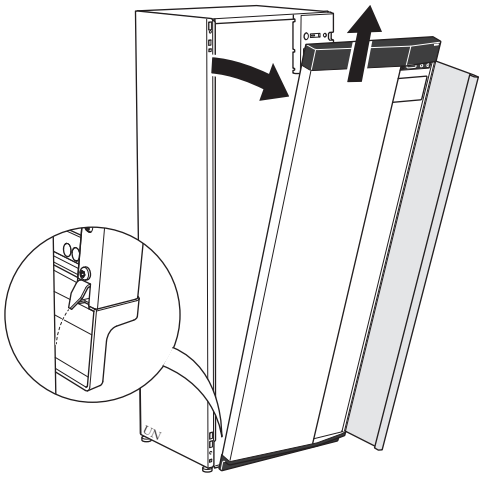

ASSEMBLE THE FRONT

1. Hook one bottom corner of the front onto the frame.

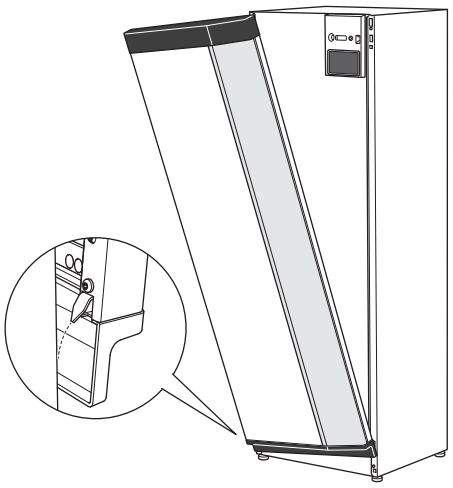

2. Hook the other corner in place.

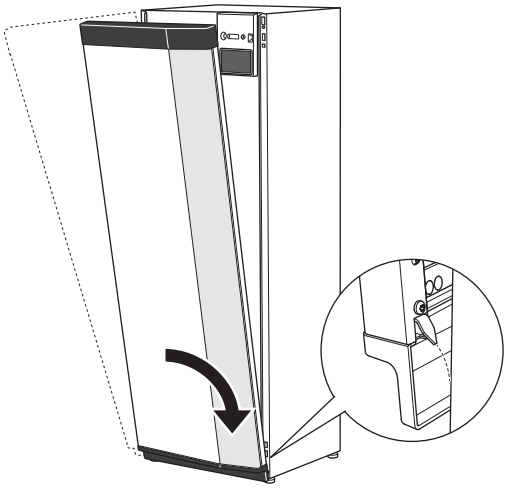

3. Check the display is straight. Adjust if necessary.

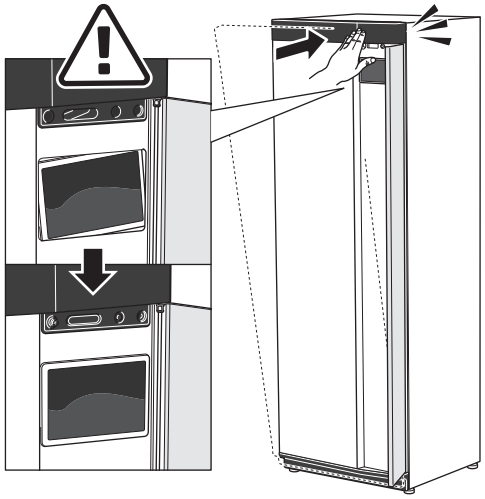

4. Press the top of the front section against the frame and screw it into place.

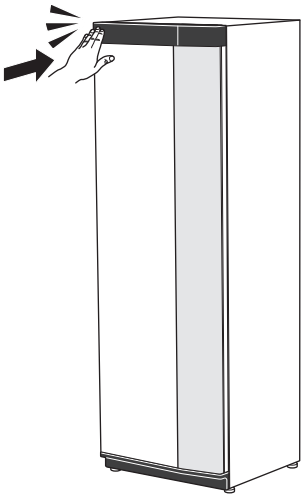

REMOVE SIDE PANEL

The side panels can be removed to facilitate the installation.

1. Remove the screws from the upper and lower edges.

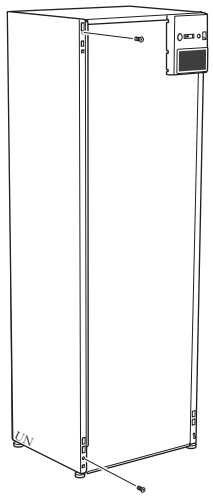

2. Twist the panel slightly outwards.

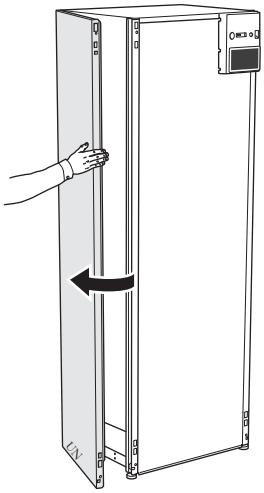

3. Move the panel outwards and backwards.

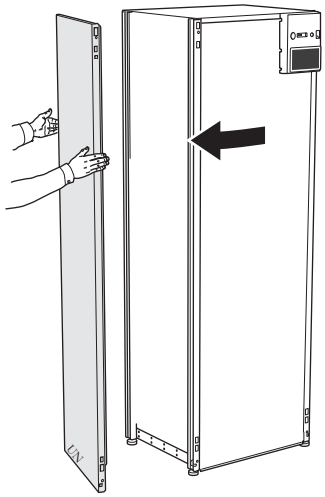

4. Assembly takes place in the reverse order.

Removing insulation

The insulation can be removed to make installation easier.

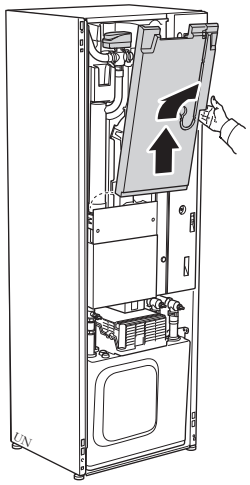

The heat pump design

General

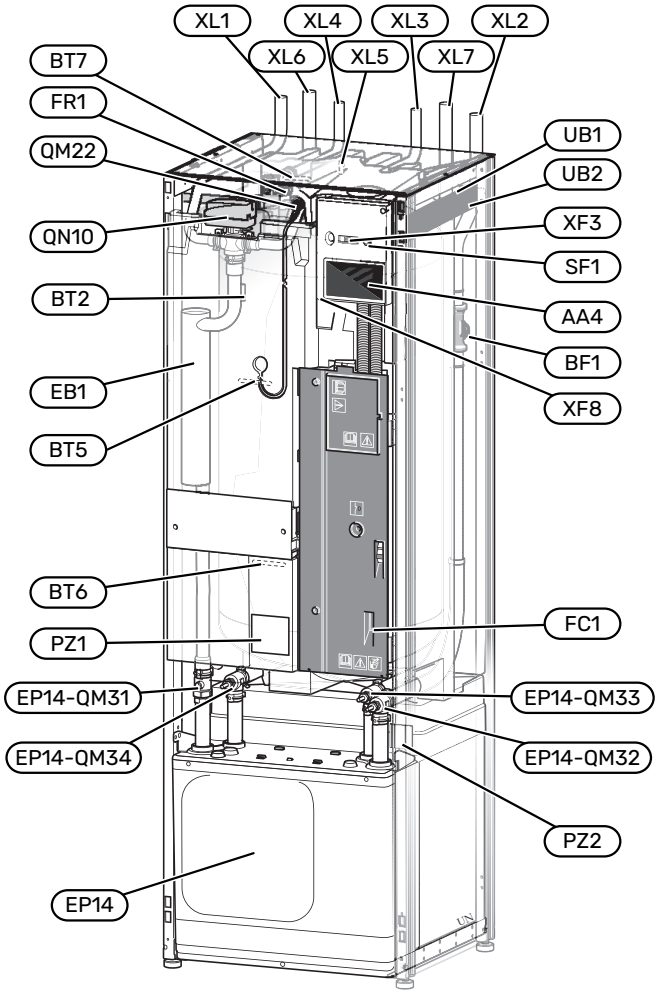

PIPE CONNECTIONS

XL1	Connection, heating medium flow
XL2	Connection, heating medium return
XL3	Connection, cold water
XL4	Connection, hot water
XL5	Connection, HWC
XL6	Connection, brine in
XL7	Connection, brine out
XL29	Connection, T&P valve

HVAC COMPONENTS

FL5	T&P valve
EP14	Cooling module
	EP14-QM31 Shut-off valve, heating medium supply
	EP14-QM32 Shut off valve, heating medium return
	EP14-QM33 Shut-off valve, brine in
	EP14-QM34 Shut off valve, brine out
QM22	Venting, coil
QN10	Shuttle valve, climate system/water heater

SENSORS ETC.

BF1	Flow meter
BT2	Temperature sensors, heating medium flow
BT5	Temperature sensor, hot water charging start
BT6	Temperature sensor, hot water charging
BT7	Temperature sensor, hot water top

ELECTRICAL COMPONENTS

AA4	Display unit
EB1	Immersion heater
FC1	Miniature circuit breaker
SF1	On/off button
XF3	USB socket
XF8	Network connection for myUplink

MISCELLANEOUS

PZ1	Rating plate
PZ2	Identification plate, cooling module
UB1	Cable gland
UB2	Cable gland

Designations according to standard EN 81346-2.

Distribution boxes

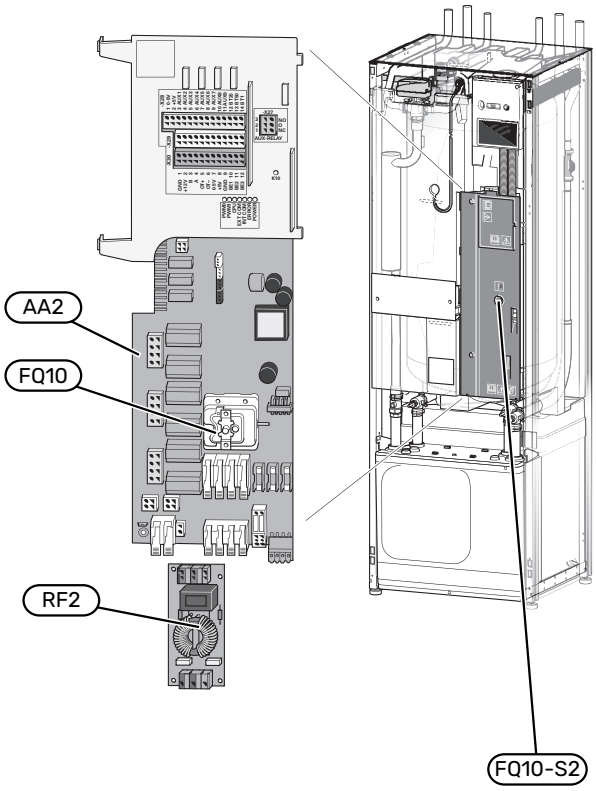

ELECTRICAL COMPONENTS

AA2	Base card
FQ10	Temperature limiter
	FQ10-S2 Reset button for temperature limiter
RF2	EMC filter[1]

[1] Only for S1256-13

Cooling module

8 kW

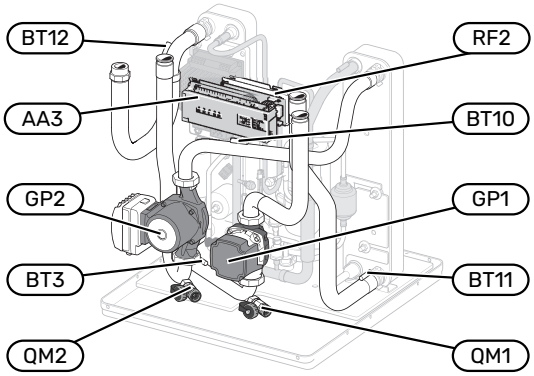

13 kW

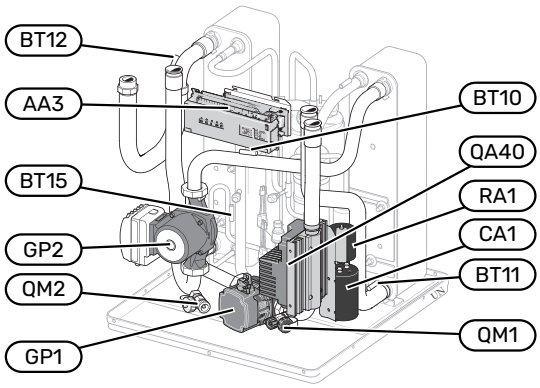

8 kW

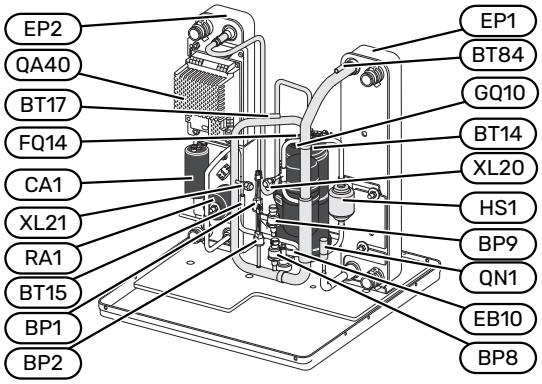

13 kW

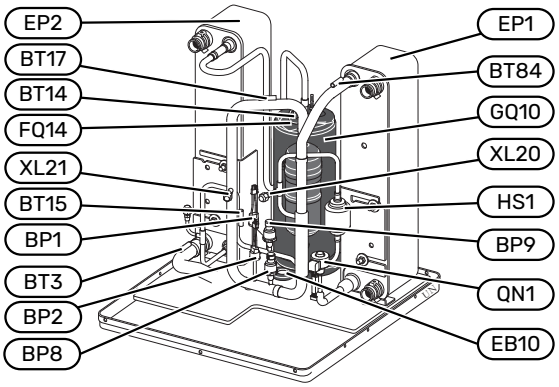

PIPE CONNECTIONS

XL20	Service connection, high pressure
XL21	Service connection, low pressure

HVAC COMPONENTS

GP1	Circulation pump
GP2	Brine pump
QM1	Drainage, climate system
QM2	Draining, brine side

SENSORS ETC.

BP1	High pressure pressostat
BP2	Low pressure pressostat
BP8	Low pressure transmitter
BP9	High pressure sensor
BT3	Temperature sensors, heating medium return
BT10	Temperature sensor, brine in
BT11	Temperature sensor, brine out
BT12	Temperature sensor, condenser supply line
BT14	Temperature sensor, hot gas
BT15	Temperature sensor, fluid pipe
BT17	Temperature sensor, suction gas
BT84	Temperature sensor, suction gas evaporator

ELECTRICAL COMPONENTS

AA3	Input circuit board
CA1	Capacitor
EB10	Compressor heater
FQ14	Temperature limiter, compressor
QA40	Inverter
RA1	Choke
RF2	EMC-filter

COOLING COMPONENTS

EP1	Evaporator
EP2	Condenser
GQ10	Compressor
HS1	Drying filter
QN1	Expansion valve

Pipe connections

General

Pipe installation must be carried out in accordance with current norms and directives. S1256 can operate with a return temperature of up to 58 °C and an outgoing temperature from the heat pump of 70 (65 °C with only the compressor).

S1256 is not equipped with external shut off valves; these must be installed to facilitate any future servicing.

Caution

Ensure that incoming water is clean. When using a private well, it may be necessary to supplement with an extra water filter.

Caution

Any high points in the climate system, must be equipped with air vents.

NOTE

The pipe systems have to be flushed clean before the product is connected, to prevent any contaminants from damaging the components.

NOTE

Water may drip from the safety valve's overflow pipe. The overflow pipe must be routed to a suitable drain, to prevent hot water splashes from causing harm. The overflow pipe must be inclined along its entire length to prevent pockets where water can accumulate, and must be frost-proof. The overflow pipe must be at least the same size as the safety valve. The overflow pipe must be visible and its mouth must be open and not placed close to electrical components.

NOTE

This installation is subject to building regulation approval, notify the local Authority of intention to install.

NOTE

Use only manufacturer's recommended replacement parts.

Waste water from the collection tray and from safety valves is led via an unpressurised overflow pipe to the drain, so hot water splashes cannot cause harm.

The mouth of the overflow pipe must be visible and not placed close to electrical components. In addition, the mouth of the overflow pipe (tundish), drain valves and motorised valves should also be positioned well away from all electrical components. This is the only permitted use of unpressurised overflow pipes. Overflow pipes from tundish (WM3) connected to the expansion relief valve (FL1) must also be connected to the drain in the same way.

The connection for the T&P valve (XL29) must not be used for any other purpose. Valves may not be positioned between the T&P valve (FL5) and the water heater.

Overflow pipes from tundish must be routed with a fall and be at least 300 mm long, before bends or angles in the pipework (see image) and must also be frost-proof.

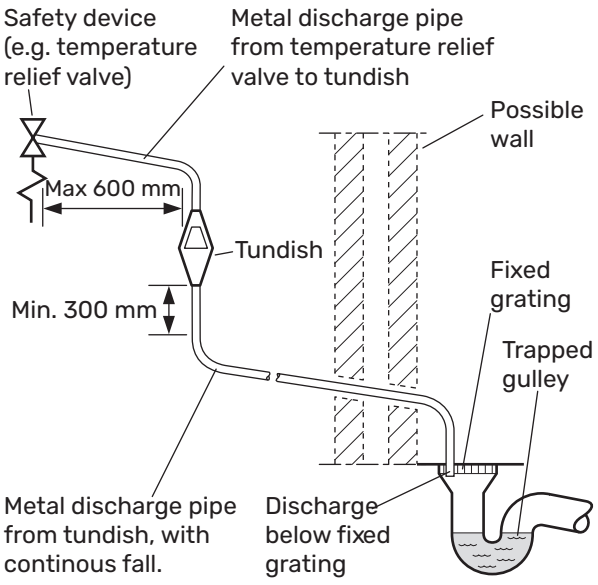

If the vertical section, 300 mm, is difficult to fill, there is a vertically adjustable bracket as an accessory.

Valve outlet size	Minimum size of discharge pipe	Minimum size of discharge pipe from tundish	Maximum resistance allowed, expressed as a lenght of straight pipe (i.e. no elbows or bends)	Resistance created by each elbow or bend
G1/2	15 mm	22 mm	up to 9 m	0.8 mm
G1/2	15 mm	28 mm	up to 18 m	1.0 mm
G1/2	15 mm	35 mm	up to 27 m	1.4 mm

Valve outlet size	Minimum size of discharge pipe	Minimum size of discharge pipe from tundish	Maximum resistance allowed, expressed as a lenght of straight pipe (i.e. no elbows or bends)	Resistance created by each elbow or bend
G3/4	22 mm	28 mm	up to 9 m	1.0 mm
G3/4	22 mm	35 mm	up to 18 m	1.4 mm
G3/4	22 mm	42 mm	up to 27 m	1.7 mm
G1	28 mm	35 mm	up to 9 m	1.4 mm
G1	28 mm	42 mm	up to 18 m	1.7 mm
G1	28 mm	54 mm	up to 27 m	2.3 mm

Table sizing of copper discharge pipe for common temperature relief valve outlet sizes.

HARD WATER AREAS

Normally, there should not normally be any problem installing S1256 in hard water areas, as the operating temperature is 50–60°C.

CLEANING THE CLIMATE SYSTEM

When the water heater and the climate system have been filled with water, S1256 must operate at maximum normal temperature for at least one hour. Thereafter the system must be drained of water and refilled.

Before installing the heat pump in an existing system, it is important that the system is properly flushed through.

Even if the heat pump is to be installed in a new system, the heat pump and system should be flushed.

> **NOTE**
>
> Ensure that cleaning agent has been removed from the entire system before adding inhibitor.

After flushing an inhibitor should be used for long-term anti-corrosion protection.

NIBE Energy Systems Limited recommends water treatments, supplied by Fernox, specifically designed for heat pumps.

SYMBOL KEY

Symbol	Meaning
	Unit box
	Shut-off valve
	Non-return valve
	Mixing valve
	Circulation pump
	Expansion vessel
	Filterball
	Fan
	Shut off valve
	Pressure gauge
	Level vessel
	Control valve
	Particle filter
	Safety valve
	Temperature sensor
	Trim valve
	Pressure reduction valve
	Tundish
	Reversing valve/shunt
	Manual reversing valve/shunt
	Heat exchanger
	Overflow valve
	Bore hole
	Ground collector

Symbol	Meaning
	Cooling system
	Pool
	Domestic hot water
	Hot water circulation
	Heat pump
	Heating system
	Heating system with lower temperature

SYSTEM DIAGRAM

S1256 consists of heat pump, water heater, immersion heater, circulation pumps and control system. S1256 is connected to the brine and heating medium circuits.

In the heat pump evaporator, the brine (water mixed with anti-freeze, glycol or ethanol) releases its energy to the refrigerant, which is vaporised in order to be compressed in the compressor. The refrigerant, of which the temperature has now been raised, is passed to the condenser where it gives off its energy to the heating medium circuit and, if necessary, to the water heater. If there is a greater need for heating/hot water than the compressor can provide there is an integrated immersion heater.

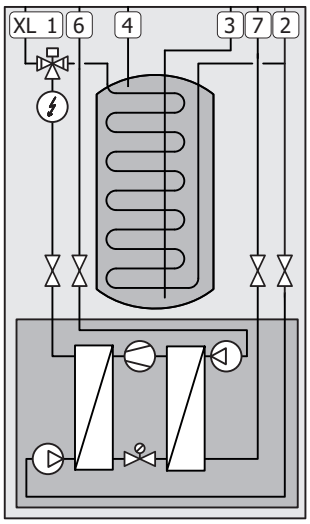

XL1	Connection, heating medium flow
XL2	Connection, heating medium return
XL3	Connection, cold water
XL4	Connection, hot water
XL6	Connection, brine in
XL7	Connection, brine out

Dimensions and pipe connections

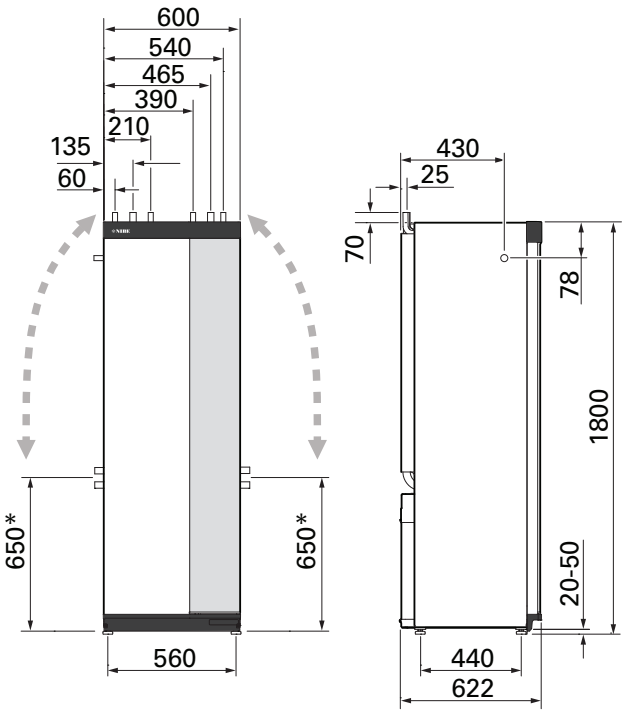

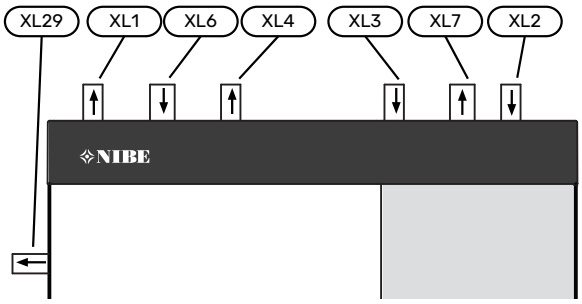

PIPE DIMENSIONS

Connection		8 kW	13 kW
(XL1)/(XL2) Heating medium supply/return ext. Ø	(mm)	22	28
(XL3)/(XL4) Cold/hot water Ø	(mm)	22	
(XL6)/(XL7) Brine in/out ext. Ø	(mm)	28	
(XL29) T&P valve Ø	(mm)	15	

* Can be angled for side connection.

Brine side

COLLECTOR

> **Caution**
> The length of the collector hose varies depending on the rock/soil conditions, climate zone and on the climate system (radiators or underfloor heating) and the building's power requirement. Each installation must be sized individually. The brine pump's capacity must be taken into consideration when sizing the collector.

In those cases where it is necessary to have several collectors, these should be connected in parallel with the possibility for adjusting the flow of the relevant coil.

For surface soil heat, the hose should be buried at a depth determined by local conditions and the distance between the hoses should be at least 1 metre.

For several bore holes, the distance between the holes must be determined according to local conditions.

Ensure the collector hose rises constantly towards the heat pump to avoid air pockets. If this is not possible, airvents should be used.

Because the temperature of the brine system can fall below 0 °C, it must be protected against freezing down to -15 °C. When making the volume calculation, use 1 litres of ready mixed brine per metre of collector hose (applies when using PEM-hose 40x2.4 PN 6.3) as a guide value.

Anti freeze must be mixed according to manufacturer's instructions to ensure frost protection and should be checked using a refractometer.

> **NOTE**
> Ensure that cleaning agent has been removed from the entire system before the anti-freeze is added.

NIBE Energy Systems Limited recommends water treatments (supplied by e.g. Fernox and Sentinel) specifically designed for heat pumps.

SIDE CONNECTION

It is possible to angle the brine connections, for connection to the side instead of top connection.

To angle out a connection:

1. Disconnect the pipe at the top connection.
2. Angle the pipe in the desired direction.
3. If necessary, cut the pipe to the desired length.

CONNECTING THE BRINE SIDE

Insulate all indoor brine pipes against condensation.

Mark the brine system with the antifreeze that is used.

Install as follows:

- enclosed level vessel (CM2)/expansion vessel

  The level vessel must be installed as the highest point in the brine system on the incoming pipe before the brine pump (Alternative 1). If the level vessel cannot be placed at the highest point, an expansion vessel must be used (Alternative 2).

  > **NOTE**
  > Note that condensation may drip from the level vessel. Position the vessel so that this does not harm other equipment.

- enclosed safety valve (FL3)

  Install the safety valve under the level vessel as illustrated.

- pressure gauge

  The pressure gauge is only required if an expansion vessel is used.

- shut-off valve

  Install the shut-off valve as close to S1256 as possible.

- enclosed filterball (QZ2)

  Install the filterball as close to S1256 as possible.

  > **TIP**
  > If filling connection KB25/KB32 is used, the enclosed filterball does not need to be fitted.

- vent valve

  When necessary you should install venting valves in the brine system.

In the case of connection to an open groundwater system, an intermediate frost-protected circuit must be provided, because of the risk of dirt and freezing in the evaporator. This requires an extra heat exchanger.

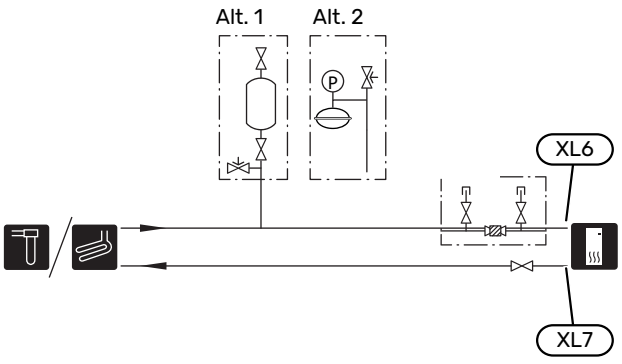

Climate system

A climate system is a system that regulates the indoor temperature with the help of the control system in S1256 and, for example, radiators, underfloor heating, underfloor cooling, fan coils, etc.

CONNECTING THE CLIMATE SYSTEM

Install as follows:

- expansion vessel
- pressure gauge
- pressure relief valve

  Recommended opening pressure is 0.25 MPa (2.5 bar). For information about max opening pressure, see technical data. Install the safety valve as illustrated.

  Install the safety valve as illustrated.
- enclosed filterball (QZ2)

  Install the filterball as close to S1256 as possible.
- shut-off valve

  Install the shut-off valve as close to S1256 as possible.
- enclosed filling valves (QM11, QM13)
- When connecting to a system with thermostats, either a bypass valve must be fitted or, alternatively, some of the thermostats must be removed to ensure there is sufficient flow and heat emission.

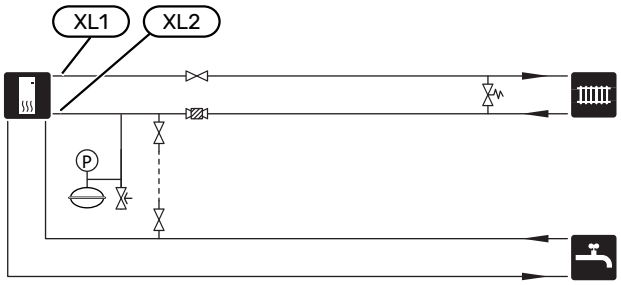

Cold and hot water

The settings for hot water are made in menu 7.1.1 - "Hot water".

Stop temperature for hot water must be at least 60°C.

CONNECTING COLD AND HOT WATER

Install as follows:

- shut-off valve
- non-return valve
- enclosed expansion relief valve (FL1)
- mixing valve

  A mixing valve must be installed when the factory setting for hot water is changed. National regulations must be observed.
- enclosed pressure relief valve (QN17)
- enclosed expansion vessel (CM4)

  The expansion vessel (CM4) accommodates expansion that results from heating the water inside the unit. The expansion vessel must be connected between the expansion relief valve (FL1) and the water heater. The location of the expansion vessel should allow access to recharge the pressure when neccessary.
- enclosed tundish (WM3)

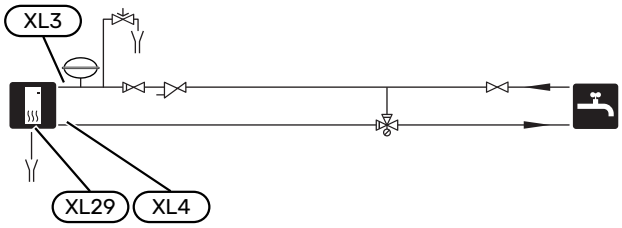

Installation alternative

S1256 can be installed in several different ways, some of which are shown here.

Further option information is available at nibe.co.uk and in the respective assembly instructions for the accessories used. See page 69 for a list of the accessories that can be used with S1256.

EXTRA HOT WATER HEATERS

The system should be supplemented with an extra water heater, if a large bath tub or other significant consumer of hot water is installed.

Water heater with immersion heater

In a water heater with an immersion heater, the water is initially heated by the heat pump. The immersion heater in the water heater is used for keeping warm and when the heat pump does not have sufficient power.

The water heater's flow is connected after S1256.

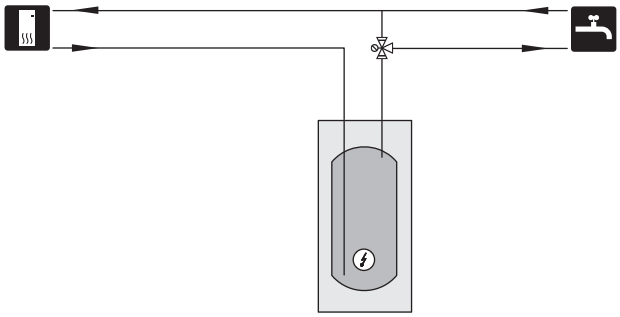

HOT WATER CIRCULATION

A circulation pump can be controlled by S1256 to circulate the hot water. The circulating water must have a temperature that prevents bacterial growth and scalding, and national standards must be satisfied.

The HWC return can be connected to XL5 or a freestanding water heater. If an electric water heater is connected after the heat pump, the HWC return must be connected to the water heater.

The expansion vessel (CM4) that is enclosed S1256 may need to be replaced with a larger one.

The circulation pump is activated via the AUX output in menu 7.4 -"Selectable in/outputs".

HWC can be supplemented with a hot water sensor for HWC (BT70) and (BT82), which is connected via the AUX input and activated in menu 7.4 -"Selectable in/outputs".

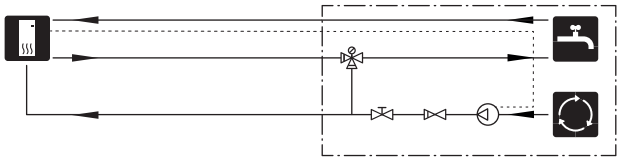

BUFFER VESSEL (UKV)

UKV is an accumulator tank that is suitable for connection to a heat pump or another external heat source, and can have several different applications.
For further information, see the Installer Manual for the accessory.

Volume

A 2-pipe-connected buffer vessel is used when the system volume in the climate system is less than the minimum recommended volume for the heat pump.

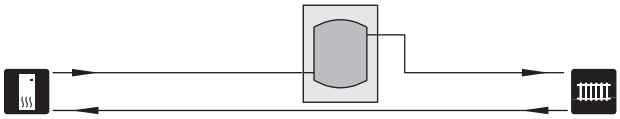

GROUND WATER SYSTEM

An intermediate heat exchanger is used to protect the heat pump's exchanger from dirt. The water is released into a buried infiltration unit or a drilled well. The circuit between the heat pump and the intermediate heat exchanger must be mixed with antifreeze. See "Possible selections for AUX output" for more information about connecting a groundwater pump.

If this docking alternative is used, "min. brine out" in menu 7.1.2.8 "br pmp al set." must be changed to a suitable value to prevent freezing of the heat exchanger.

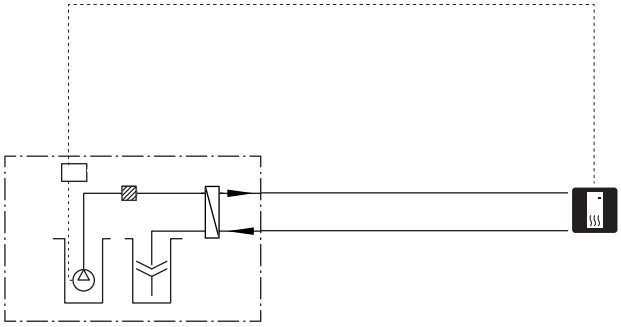

VENTILATION RECOVERY

The installation can be supplemented with the exhaust air module NIBE FLM S45 to provide ventilation recovery.

- Pipes and other cold surfaces must be insulated with diffusion-proof material to prevent condensation.
- The brine system must be supplied with a pressure expansion vessel. If there is a level vessel this should be replaced.

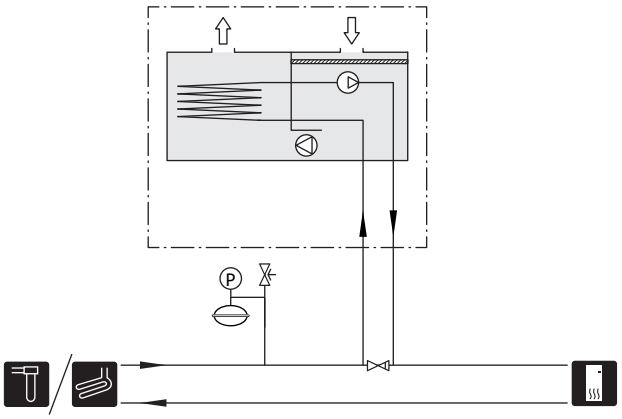

EXTRA CLIMATE SYSTEM

In buildings with several climate systems that require different supply temperatures, the accessory ECS 40/ECS 41 can be connected.

A shunt valve then lowers the temperature to the underfloor heating system, for example.

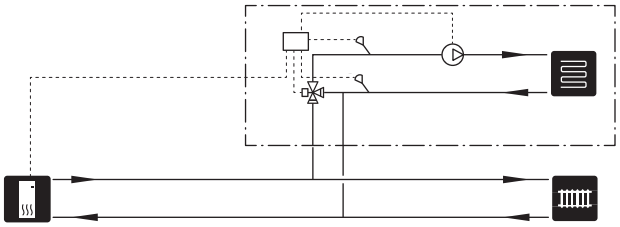

COOLING

The accessory PCS 44 allows the connection of passive cooling, for example with fan coils. The cooling system is connected to the heat pump brine circuit, whereby cooling is supplied from the collector via a circulation pump and shunt valve.

- Pipes and other cold surfaces must be insulated with diffusion-proof material to prevent condensation.
- Where the cooling demand is high, fan convectors with drip trays and drain connection are needed.
- The brine system must be supplied with a pressure expansion vessel. If there is a level vessel this should be replaced.

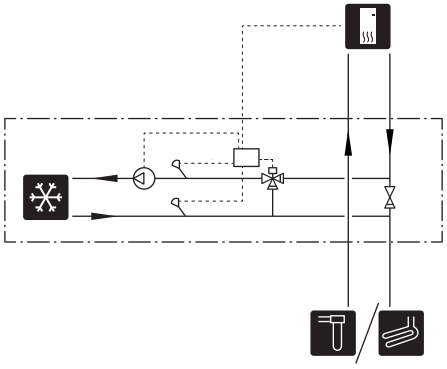

POOL

With the POOL 40 accessory, you can heat the pool with your system.

During pool heating, the heating medium circulates between the S1256 and the pool exchanger using the heat pump's internal circulation pump.

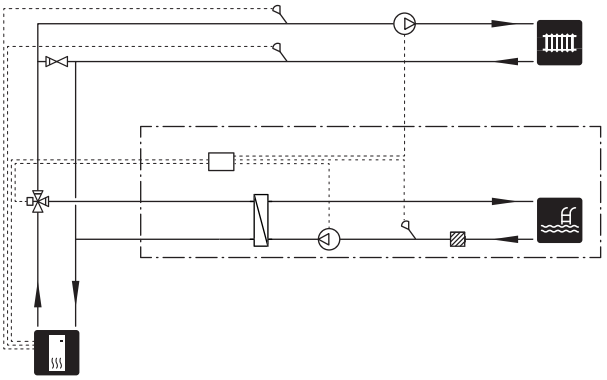

Electrical connections

General

All electrical equipment, except the outdoor temperature sensors and room temperature sensors are ready connected at the factory.

- Electrical installation and wiring must be carried out in accordance with national provisions.
- Disconnect S1256 before insulation testing the house wiring.
- If the building is equipped with an earth-fault breaker, S1256 should be equipped with a separate one.
- S1256 must be installed via an isolator switch. The cable area has to be dimensioned based on the fuse rating used.
- If a miniature circuit breaker is used, this must have at least triggering characteristic "C". See section "Technical specifications" for fuse size.
- To prevent interference, sensor cables to external connections must not be laid close to high voltage cables.
- The minimum area of communication and sensor cables to external connections must be 0.5 mm² up to 50 m, for example EKKX, LiYY or equivalent.
- Electrical wiring diagram for S1256, see separate handbook (WHB).
- When routing a cable into S1256, the cable grommets (UB1) and (UB2) must be used.

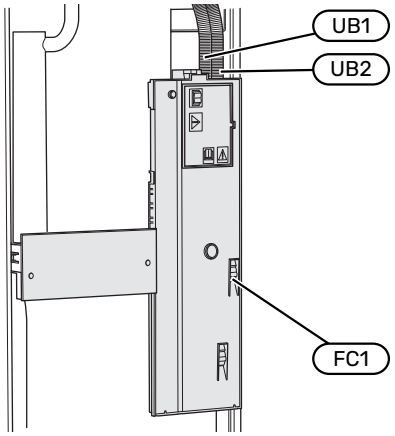

NOTE

Electrical installation and any servicing must be carried out under the supervision of a qualified electrician. Disconnect the current using the circuit breaker before carrying out any servicing.

NOTE

If the supply cable is damaged, only NIBE, its service representative or similar authorised person may replace it to prevent any danger and damage.

NOTE

Check the connections, main voltage and phase voltage before the product is started, to prevent damage to the heat pump electronics.

NOTE

Do not start the system before filling up with water. Components in the system could be damaged.

MINIATURE CIRCUIT-BREAKER

The operating circuit in S1256 and some of its internal components are fused internally by a miniature circuit breaker (FC1).

ACCESSIBILITY, ELECTRICAL CONNECTION

Removing the cover

The hatch is opened using a screwdriver.

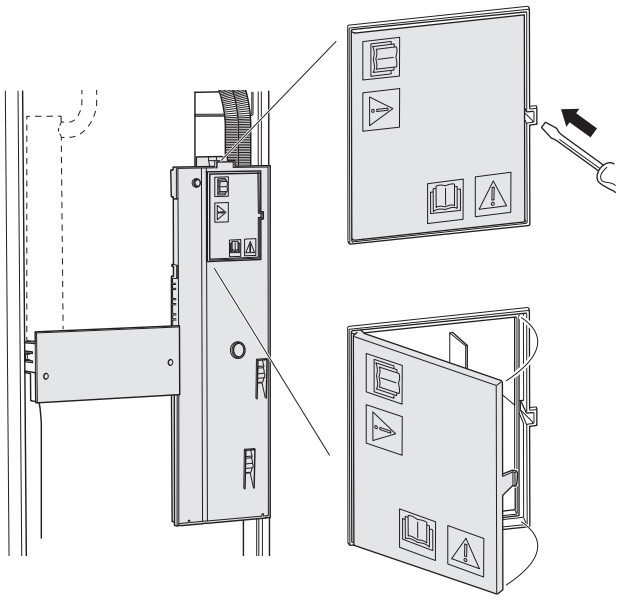

Removing the covers

The cover is opened using a screwdriver.

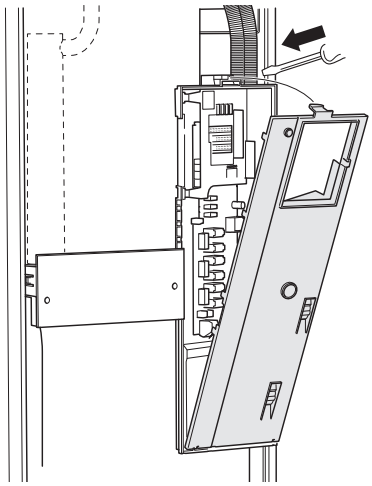

CABLE LOCK

Use a suitable tool to release/lock cables in the heat pump terminal blocks.

Terminal block

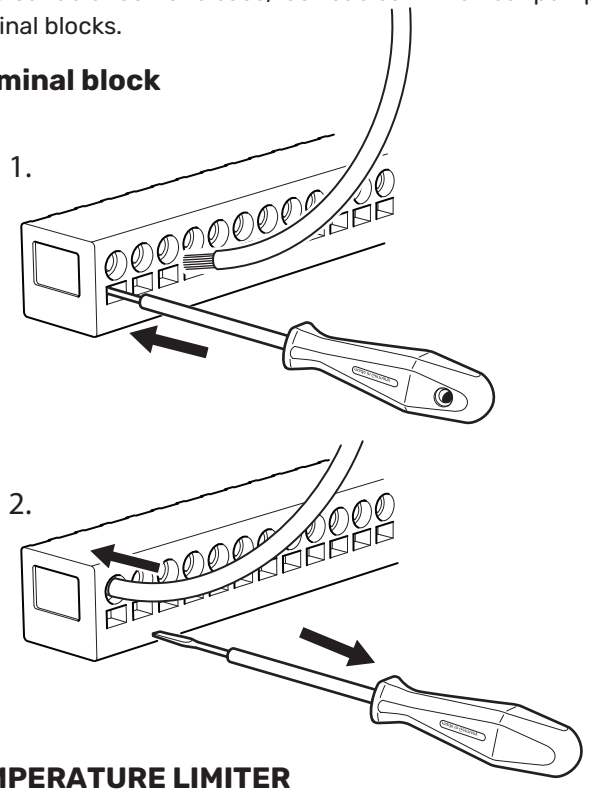

TEMPERATURE LIMITER

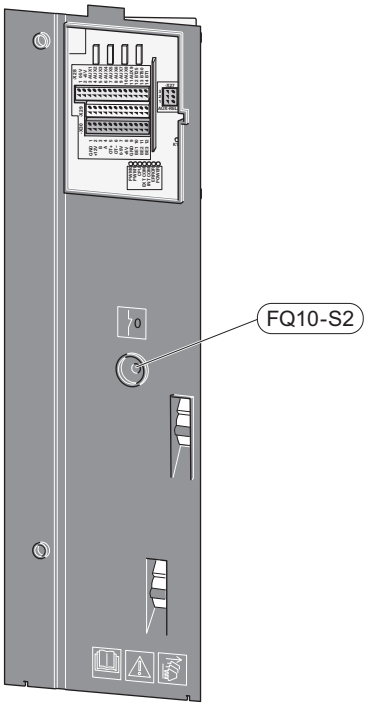

The temperature limiter (FQ10) cuts the power supply to the electric additional heat if the temperature rises above 89 °C and it is reset manually.

Resetting

The temperature limiter (FQ10) is accessed behind the front cover. Reset the temperature limiter by pressing its button (FQ10-S2).

Connections

TERMINAL BLOCKS

The following terminal blocks are used on the base board (AA2).

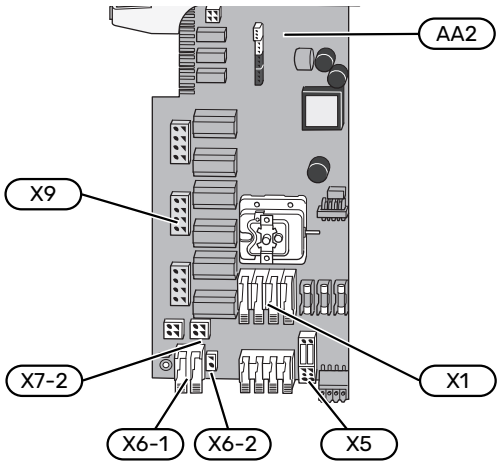

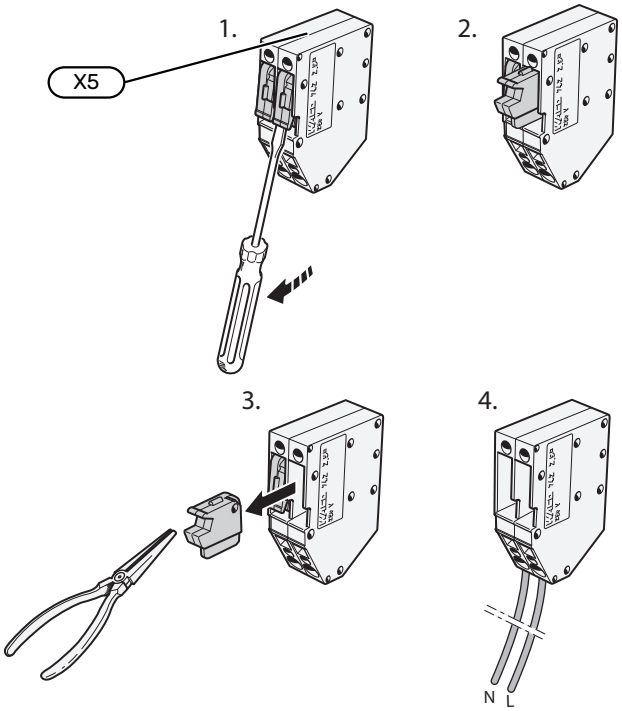

POWER CONNECTION

Supply voltage

Enclosed cable for incoming supply electricity is connected to terminal block X1 and X6-1 on the PCB (AA2).

Connection 1x230 V

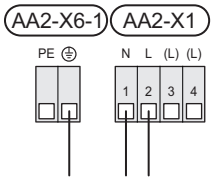

External control voltage for the control system

If the control system is to be powered separately from the other components in the heat pump (e.g. for tariff control), a separate operating cable must be connected.

> **NOTE**
>
> During service, all supply circuits must be disconnected.

Remove the bridges from terminal block X5.

Control voltage (230 V ~ 50Hz) connects to AA2:X5:N, X5:L and X6-2 (PE).

Enclosed label

The enclosed label is placed on the electrical connection's cover.

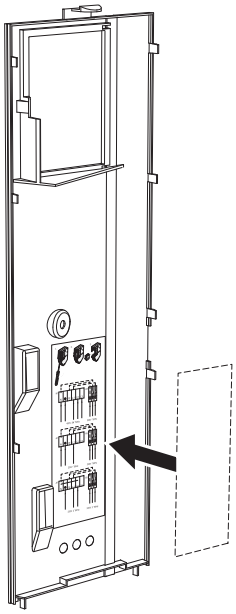

Tariff control

If the voltage to the immersion heater and/or compressor is lost for a period, "Tariff blocking" must be selected at the same time via the selectable inputs, see section "Selectable inputs".

EXTERNAL CONNECTIONS

Connect external connections on terminal blocks X28, X29 and X30 on the base board (AA2).

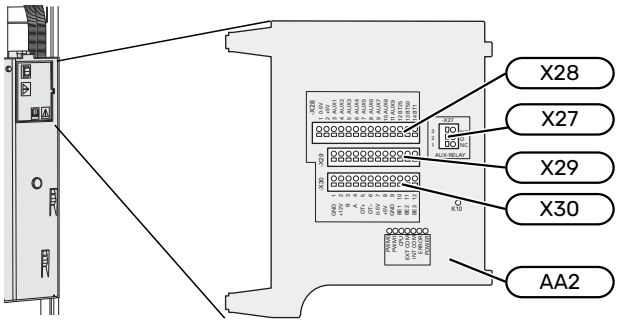

Sensors

Outside sensor

The outdoor temperature sensor (BT1) is placed in the shade on a wall facing north or north-west, so it is unaffected, for example, by the morning sun.

Connect the outdoor temperature sensor to terminal block AA2-X28:14 and AA2-X29:GND.

If a conduit is used it must be sealed to prevent condensation in the sensor capsule.

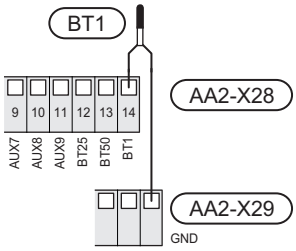

External supply temperature sensor

If an external supply temperature sensor (BT25) needs to be used, connect it to terminal block AA2-X28:12 and to terminal block AA2-X29:GND.

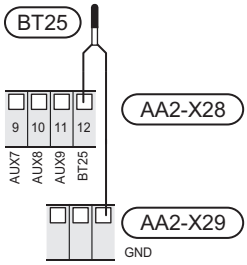

Room sensor

S1256 is supplied with an enclosed room sensor (BT50) that makes it possible to display and control the room temperature in the display on S1256.

Fit the room sensor in a neutral position where a set temperature is required. A suitable location might be, for example, on a free inner wall in a hall approx. 1.5 m above the floor. It is important that the room sensor is not obstructed from measuring the correct room temperature, for example by being located in a recess, between shelves, behind a curtain, above or close to a heat source, in a draught from an external door or in direct sunlight. Closed radiator thermostats can also cause problems.

S1256 operates without room sensor, but if you want to read the home's indoor temperature from the display on S1256, the room sensor must be fitted. Connect the room sensor to terminal block X28:13 and AA2-X29:GND.

If a room sensor is to be used to change the room temperature in °C and/or to fine-tune the room temperature, the sensor must be activated in menu 1.3 - "Room sensor settings".

If a room sensor is used in a room with underfloor heating, it should only have an indicatory function, not control of the room temperature.

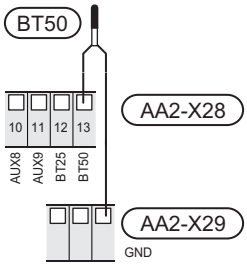

> **Caution**
>
> Changes of temperature in accommodation take time. For example, short time periods in combination with underfloor heating will not give a noticeable difference in room temperature.

Pulse energy meter

Up to two electricity meters or energy meters for heating (BE6, BE7) can be connected to S1256 via terminal blocks AA2-X28:1-2 and AA2-X30:7-8.

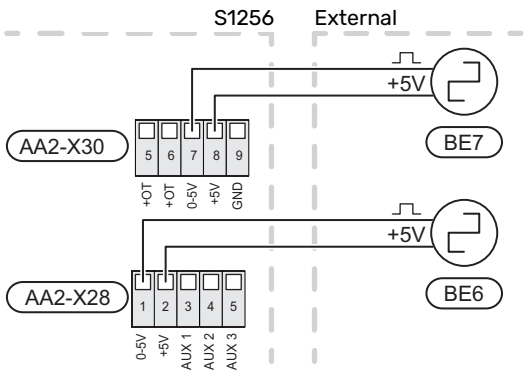

Activate the meter(s) in menu 7.2 - "Accessory settings" and then set the desired value ("Energy per pulse" or "Pulses per kWh") in menu 7.2.19 -"Pulse energy meter".

Load monitor

Integrated load monitor

S1256 is equipped with a simple form of integrated load monitor, which limits the power steps for the electric additional heat by calculating whether future power steps can be connected to the relevant phase without exceeding the current for the specified main fuse.

If the current would exceed the specified main fuse, the power step is not permitted. The size of the property's main fuse is specified in menu 7.1.9 - "Load monitor".

COMMUNICATION

Multi-installation

Several heat pumps can be interconnected by selecting one heat pump as the main unit and the others as subordinate heat pumps.

Ground source heat pumps with multi-installation functionality from NIBE can be connected to S1256.

A further eight heat pumps can be connected to the main unit. In systems with several heat pumps, each pump must have a unique name. Only one heat pump can be "Main unit" and only one can be, for example, "Heat pump 5". Main unit/heat pump are set in menu 7.3.1.

External temperature sensors and control signals must only be connected to the main unit, except for external control of the compressor module.

> **NOTE**
>
> When several heat pumps are connected together, an external supply temperature sensor (BT25) and an external return line sensor (BT71) must be used.

Connect the communication cables between the heat pumps in series to terminal block X30:1 (GND), X30:2 (+12V), X30:3 (B) and X30:4 (A) on the base board (AA2).

The example shows the connection of several S1256 .

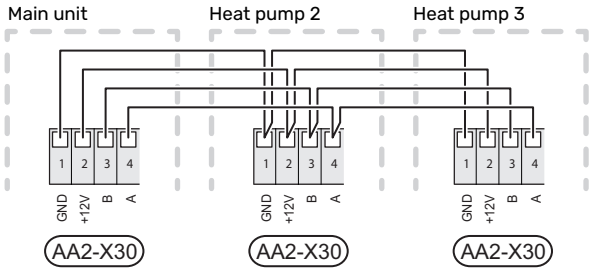

Connecting accessories

Instructions for connecting accessories are provided in the manual accompanying the accessory. See section "Accessories" for a list of the accessories that can be used with S1256. Connection for communication with the most common accessories is shown here.

Accessories with accessory board (AA5)

Accessories with accessory board (AA5) connect to terminal block AA2-X30:1, 3, 4 in S1256.

If several accessories are to be connected, or are already installed, the boards are connected in series.

Because there can be different connections for accessories with accessory board (AA5), you should always read the instructions in the manual for the accessory that is to be installed.

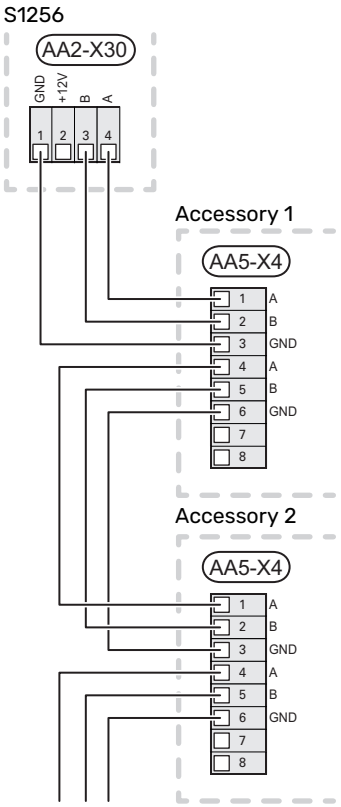

Network cable for myUplink (W130)

In instances when you want to connect to myUplink using a network cable instead of via wifi.

1. Connect the shielded network cable to the display.
2. Route the network cable to the top of S1256.
3. Follow the flow meter's cable out at the rear.

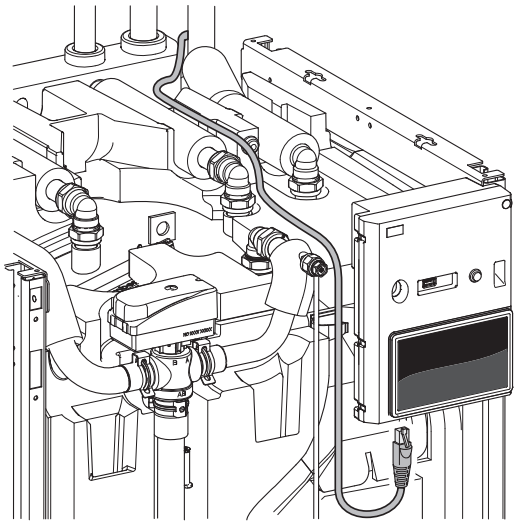

SELECTABLE OUTPUTS/INPUTS

S1256 has software-controlled AUX inputs and outputs for connecting the external switch function (contact has to be potential-free) or sensor.

In menu 7.4 - "Selectable in/outputs", you select the AUX connection to which each function has been connected.

For certain functions, accessories may be required.

TIP

Some of the following functions can also be activated and scheduled via menu settings.

Selectable inputs

Selectable inputs on the base board (AA2) for these functions are AA2-X28:3-11. Each function connects to any input and GND (AA2-X29).

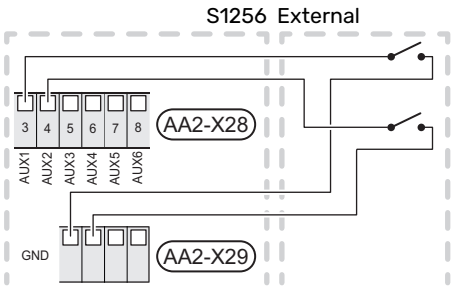

The example above uses the inputs AUX1 (AA2-X28:3) and AUX2 (AA2-X28:4).

Selectable outputs

A selectable output is AA2-X27.

The output is a potential-free switching relay.

If S1256 is switched off or in emergency mode, the relay is in C-NC position.

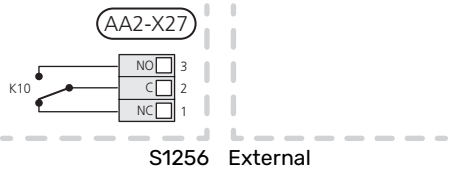

Caution

The relay output may be subjected to a max load of 2 A at resistive load (230 V~).

TIP

The AXC accessory is required if more than one function is to be connected to the AUX output.

Possible selection for AUX inputs

Temperature sensor

Available options are:

- six dedicated sensors (BT37.1 – BT37.6) for placing wherever you want.
- cooling/heating (BT74), determines when it is time to switch between cooling and heating mode (selectable when the cooling function is activated in menu 7.2.1 - "Add/remove accessories").
- external return line sensor (BT71)
- displayed hot water sensor for HWC (BT70). Placed on the supply line.
- displayed hot water sensor for HWC (BT82). Placed on the return line.

Monitor

Available options are:

- alarm from external units.
  The alarm is connected to the control, which means that the malfunction is shown as an information message in the display. Potential free signal of type NO or NC.
- pressure switch for climate system (NC).
- level monitor[1]/ pressure switch / flow monitor for brine (NC).

External activation of functions

An external switch function can be connected to S1256 to activate various functions. The function is activated during the time the switch is closed.

Possible functions that can be activated:

1 (Accessory NV10)

- forced control of brine pump
- hot water demand mode "More hot water"
- hot water demand mode "Small"
- “External adjustment”

  When the switch is closed, the temperature is changed in °C (if a room sensor is connected and activated). If a room sensor is not connected or not activated, the desired change of "Temperature" ("Offset") is set with the number of steps selected. The value is adjustable between -10 and +10. Setting the value for the change is performed in menu 1.30.3 - "External adjustment".
- activation of one of four fan speeds.

  (Can be selected if ventilation accessory is activated.)

  The following options are available:

  - "Activate fan speed 1 (NO)" - "Activate fan speed 4 (NO)"
  - “Activate fan speed 1 (NC)”

  The fan speed is activated during the time the switch is closed. Normal speed is resumed when the switch is opened again.
- SG ready

> **Caution**
>
> This function can only be used in mains networks that support the "SG Ready" standard.
>
> "SG Ready" requires two AUX inputs.

In cases where this function is required, it must be connected to terminal block X28 on the base board (AA2).

"SG Ready" is a smart form of tariff control, through which your electricity supplier can affect the indoor, hot water and/or pool temperatures (if applicable) or simply block the additional heating and/or the compressor in the heat pump at certain times of the day (can be selected in menu 4.2.3 after the function has been activated). Activate the function by connecting potential-free switch functions to two inputs selected in menu 7.4 - "Selectable in/outputs" (SG Ready A and SG Ready B).

Closed or open switch means one of the following:

- *Blocking (A: Closed, B: Open)*

  "SG Ready" is active. The compressor in S1256 and additional heat are blocked.
- *Normal mode (A: Open, B: Open)*

  "SG Ready" is not active. No effect on the system.
- *Low price mode (A: Open, B: Closed)*

  "SG Ready" is active. The system focuses on costs savings and can for example exploit a low tariff from the electricity supplier or over-capacity from any own power source (effect on the system can be adjusted in the menu 4.2.3).
- *Overcapacity mode (A: Closed, B: Closed)*

  "SG Ready" is active. The system is permitted to run at full capacity at over capacity (very low price) with the electricity supplier (effect on the system is settable in menu 4.2.3).

(A = SG Ready A and B = SG Ready B)

External blocking of functions

An external switch function can be connected to S1256 for blocking various functions. The switch must be potential-free and a closed switch results in blocking.

> **NOTE**
>
> Blocking entails a risk of freezing.

Functions that can be blocked:

- heating (blocking of heating demand)
- hot water (hot water production). Any hot water circulation (HWC) remains in operation.
- compressor
- internally controlled additional heat
- tariff blocking (additional heat, compressor, heating, cooling and hot water are disconnected)

Possible selections for AUX output

Indications

- alarm
- low electricity price (Smart Price Adaption)
- defrosting ambient air collector (only applies if there are cooling accessories)
- common alarm
- cooling mode indication (only applies if there are cooling accessories)
- extra cooling (only applies if there are cooling accessories)
- delayed cooling mode indication (only applies if there are cooling accessories)
- holiday
- away mode

Control

- circulation pump for hot water circulation
- external heating medium pump
- ground water pump
- external reversing valve for hot water

> **NOTE**
>
> The relevant distribution box must be marked with a warning about external voltage.

Connecting external circulation pump

An external circulation pump is connected to the AUX output, as illustrated below.

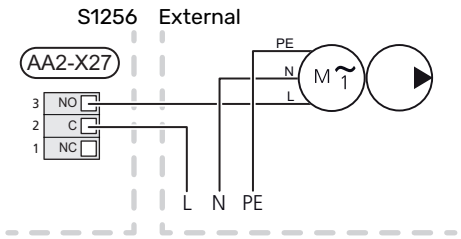

Settings

ELECTRICAL ADDITION - MAXIMUM OUTPUT

Number of steps, maximum electrical power and supply on connection for the immersion heater varies depending on model, see tables.

The immersion heater's power is set in menu 7.1.5.1 - "Int elec add heat".

Power steps of the immersion heater

The table(s) displays the total phase current for the immersion heater.

1x230 V S1256-8

Max electrical addition (kW)	Max phase current L1(A)
0.0	-
0.5	2.2
1.0	4.3
1.5	6.5
2.0	8.7
2.5	10.9
3.0	13.0
3.5	15.2
4.0	17.4
4.5[1]	19.6

1 Factory setting

1x230 V, S1256-13

Max electrical addition (kW)	Max phase current L1(A)
0.0	-
1.0	4.3
2.0	8.7
3.0	13.0
4.0	17.4
5.0	21.7
6.0	26.1
7.0[1]	30.4

1 Factory setting

In addition to this, there is the current for compressor operation.

EMERGENCY MODE

Emergency mode is used in event of operational interference and in conjunction with service.

When S1256 is put into emergency mode, the system works as follows:

- The compressor is blocked.
- S1256 prioritises heating production.
- Hot water is produced if possible.
- Max output for the immersion heater in emergency mode, limited according to the setting in menu 7.1.8.2 - "Emergency mode".
- Fixed supply temperature if the system has no value from the outdoor temperature sensor (BT1).

When the emergency mode is active, the status lamp is yellow.

You can activate the emergency mode both when S1256 is running and when it is switched off.

To activate when S1256 is running: press and hold the on/off button (SF1) for 2 seconds and select "emergency mode" from the shutdown menu.

To activate emergency mode when S1256 is switched off: press and hold the on/off button (SF1) for 5 seconds. (Deactivate the emergency mode by pressing once.)

Commissioning and adjusting

Preparations

1. Check that the externally mounted filling valves are fully closed.

Caution

Check the miniature circuit-breaker (FC1). It could have tripped during transport.

NOTE

Do not start S1256 if there is a risk that the water in the system has frozen.

NOTE

At the time of commissioning, complete all relevant sections of the Benchmark Checklist located at the back of this document.

Completion of the Benchmark Checklist is a condition of warranty. For full terms and conditions of warranty, please see our website nibe.co.uk.

Filling and venting

Caution

Insufficient venting can damage internal components in S1256.

FILLING THE CLIMATE SYSTEM

1. Install the enclosed filling hose (WN1) in the filling valves (QM11), (QM13) between the climate system and the incoming cold water.
2. Open the filling valves (QM11),(QM13). Fill the coil in the hot water heater and the rest of the climate system with water.
3. Open the vent valve (QM22) on the heat pump.
4. When the water exiting the vent valve (QM22) is no longer mixed with air, close the valve.
5. After a while, the pressure begins to rise on the pressure gauge (BP5). When the pressure reaches 2.5 bar (0.25 MPa), the safety valve (FL2) starts to release water. Close the filling valves (QM11) and (QM13).
6. When the filling procedure is complete, remove the filling hose (WN1).

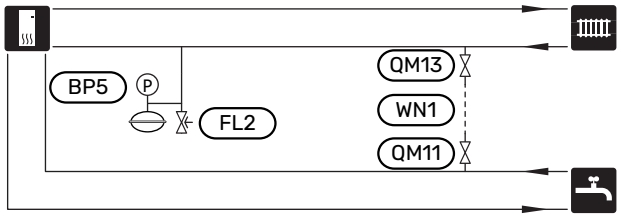

VENTING THE CLIMATE SYSTEM

1. Vent the heat pump via the vent valve (QM22) and the rest of the climate system via its respective vent valves.
2. Keep topping up and venting until all air has been removed and the pressure is correct.

NOTE

The pipe from the coil in the container must be drained of water before air can be removed. This means that the system is not necessarily vented, despite the flow of water when the vent valve (QM22) is opened.

FILLING THE HOT WATER HEATER

1. Open a hot water tap in the house.
2. Fill the hot water heater through the cold water connection (XL3).
3. When the water that comes out of the hot water tap is no longer mixed with air, the water heater is full and the tap can be closed.

FILLING THE BRINE SYSTEM

When filling the brine system, mix the water with antifreeze in an open container. The mixture should be protected against freezing down to about -15°C. The brine is topped up by connecting a filling pump.

1. Check the brine system for leakage.
2. Connect the filling pump and return line on the brine system's filling connection (accessory).
3. If alternative 1 is used (level vessel), close the valve under the level vessel.
4. Close the reversing valve in the filling connection.
5. Open the valves on the filler connector.
6. Start the filling pump.
7. Fill until liquid enters the return pipe.
8. Close the valves on the filler connector.
9. Open the reversing valve in the filling connection.
10. If alternative 1 (level vessel) is used, open the valve under the level vessel (CM2).

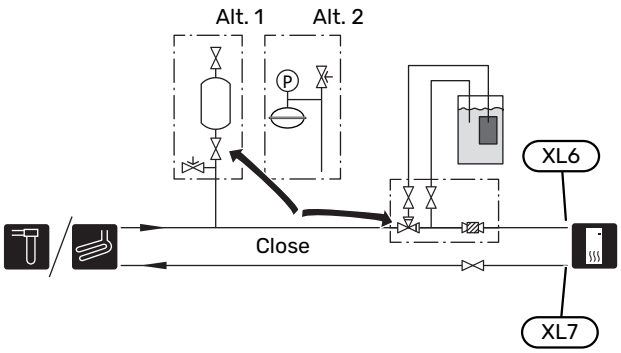

VENTING THE BRINE SYSTEM

Level vessel

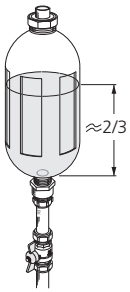

Check the fluid level in the level vessel (CM2). If the fluid level has dropped, top up the system.

1. Close the valve under the vessel.
2. Disconnect the connection on top of the vessel.
3. Fill with brine until approx 2/3 of the vessel is full.
4. Reconnect the connector at the top of the vessel.
5. Open the valve under the vessel.

If the pressure in the system needs to be raised, this is done by closing the valve on the outgoing main line when the brine pump (GP2) is in operation and the level vessel (CM2) is open, so that liquid is drawn down from the vessel.

Expansion vessel

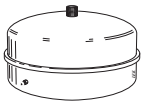

If a pressure expansion vessel (CM3) is used instead of a level vessel, the pressure level is checked with the pressure gauge (BP6). If the pressure drops, the system should be replenished.

Start-up and inspection

START GUIDE

NOTE

There must be water in the climate system before S1256 is started.

NOTE

With several heat pumps connected, the start guide must first be run in the subordinate heat pumps.

In the heat pumps that are not the main unit, you can only make settings for each heat pump's circulation pumps. Other settings are made and controlled by the main unit.

1. Start S1256 by pressing the on/off button (SF1).
2. Follow the instructions in the display's start guide. If the start guide does not start when you start the S1256, you can start it manually in menu 7.7.

TIP

See the section "Control – Introduction" for a more detailed introduction to the installation's control system (operation, menus, etc.).

If the building is cooled when S1256 starts, the compressor may not be able to meet the entire demand without having to use additional heating.

Commissioning

The first time the installation is started a start guide is started. The start guide instructions state what needs to carried out at the first start together with a run through of the installation's basic settings.

The start guide ensures that the start-up is carried out correctly and, for this reason, cannot be skipped.

Caution

As long as the start guide is active, no function in the installation will start automatically.

Operation in the start guide

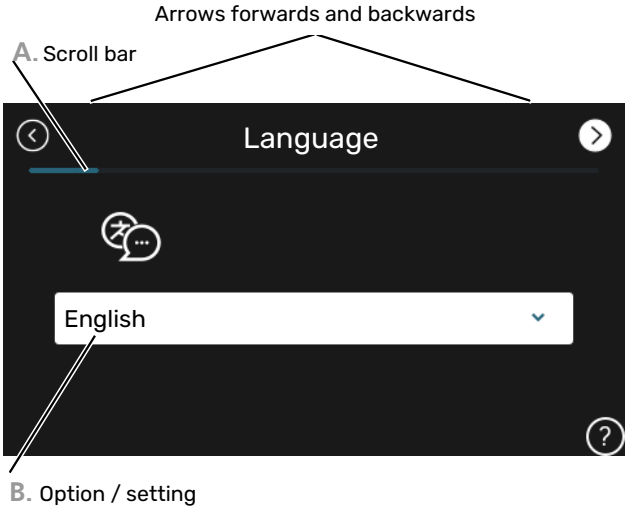

A. Scroll bar

Here you can see how far you have come in the start guide.

Drag to the right or left with your finger to browse between the pages.

You can also press the arrows in the top corners to browse.

B. Option / setting

Make settings for the system here.

SETTING PUMP SPEEDS

Pump adjustment, automatic operation

Brine side

To set the correct flow in the brine system, the brine pump must run at the correct speed. S1256 has a brine pump that is controlled automatically in standard mode. Certain functions and accessories may demand that it be run manually, in which case the correct speed must be set.

> **TIP**
>
> For optimum operation when several heat pumps are installed in a multi-installation, all heat pumps should have the same compressor size.

This automatic control occurs when the compressor is running and sets the speed of the brine pump so that the optimum temperature difference between the supply and return lines is attained.

Climate system

To set the correct flow in the climate system, the heating medium pump must run at the correct speed. S1256 has a heating medium pump that can be automatically controlled in standard mode. Certain functions and accessories may demand that it be run manually, in which case the correct speed must be set.

This automatic control takes place when the compressor is running and sets the speed of the heating medium pump, for the relevant operating mode, so the optimum temperature difference between the supply and return lines is obtained. During heating operation, the set DOT (dimensioned outdoor temperature) and temperature difference in menu 7.1.6.2. are used. If necessary, the maximum speed of the circulation pump can be limited in menu 7.1.2.2.

Pump adjustment, manual operation

Brine side

S1256 has a brine pump that can be automatically controlled. For manual operation: deactivate "Auto" in menu 7.1.2.7 and then set the speed according to the diagram below.

> **Caution**
>
> When an accessory for passive cooling is used, the brine pump speed must be set in menu 7.1.2.7

Set the pump speed when the system has come into balance (ideally 5 minutes after compressor start).

Adjust the flow so that the temperature difference between brine out (BT11) and brine in (BT10) is between 2 - 5 °C. Check these temperatures in menu 3.1 "Operating info" and adjust the brine pump's (GP2) speed until the temperature difference is obtained. A large difference indicates a low brine flow and a small difference indicates a high brine flow.

External available pressure, kPa
Electrical power, W

S1256 8 kW

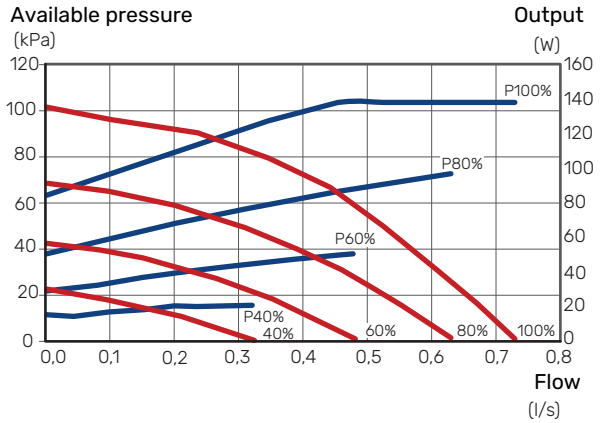

S1256 13 kW

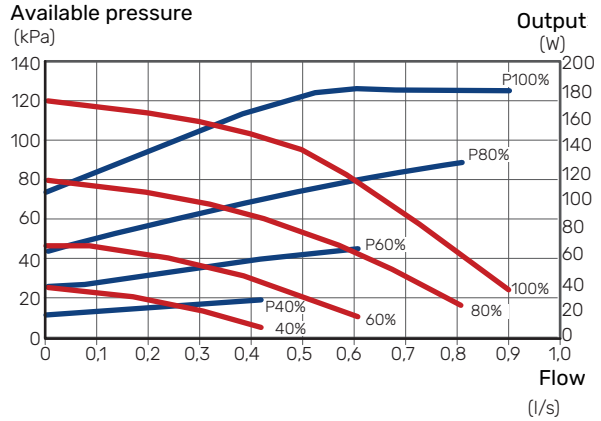

Climate system

S1256 has a heating medium pump that can be controlled automatically. For manual operation, deactivate "Auto" in menu 7.1.2.2 and then set the speed according to the diagrams below.

The flow must have a suitable temperature difference for the operating case (heating operation: 5 - 10 °C, hot water generation: 5 - 10 °C, pool heating: approx. 15 °C) between controlling supply temperature sensor and return line sensor. Check these temperatures in menu 3.1 "Operating info" and adjust the heating medium pump (GP1) speed until the temperature difference is attained. A large difference indicates a low heating medium flow and a small difference indicates a high heating medium flow.

External available pressure, kPa
Electrical power, W

S1256 8 kW

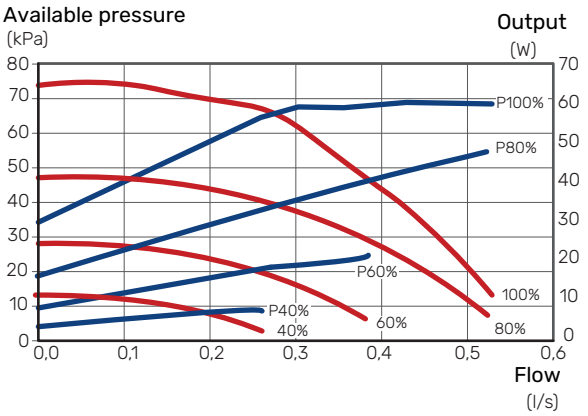

S1256 13 kW

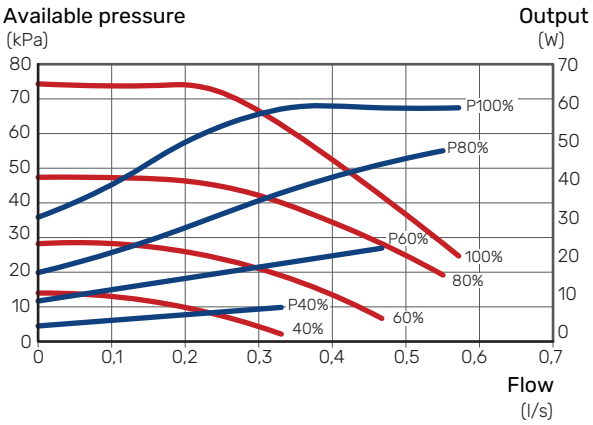

Setting the heating curve

In the menu "Curve, heating", you can see the heating curve for your house. The task of the curve is to provide an uniform indoor temperature, regardless of the outdoor temperature, and thereby energy-efficient operation. Based on this curve, the S1256 determines the temperature of the water to the climate system (the supply temperature) and thus the indoor temperature.

CURVE COEFFICIENT

The slope of the heating curve indicates how many degrees the supply temperature is to be increased/reduced when the outdoor temperature drops/increases. A steeper slope means a higher supply temperature at a certain outdoor temperature.

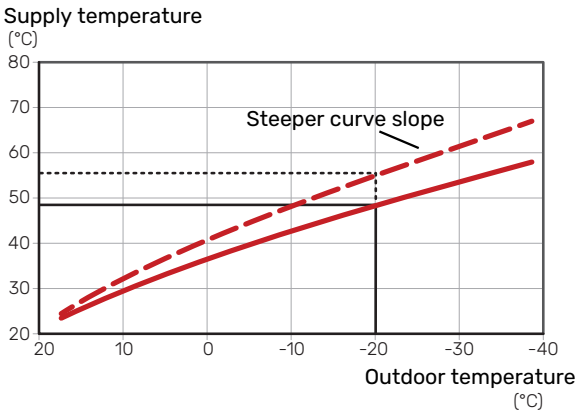

The optimum curve slope depends on the climate conditions in your location, whether the house has radiators, fan coils or underfloor heating and how well insulated the house is.

The heating curve is set when the heating installation is installed, but may need adjusting later. Normally, the curve will not need further adjustment.

CURVE OFFSET

An offset of the heating curve means that the supply temperature changes by the same amount for all outdoor temperatures, e.g. a curve offset of +2 steps increases the supply temperature by 5 °C at all outdoor temperatures.

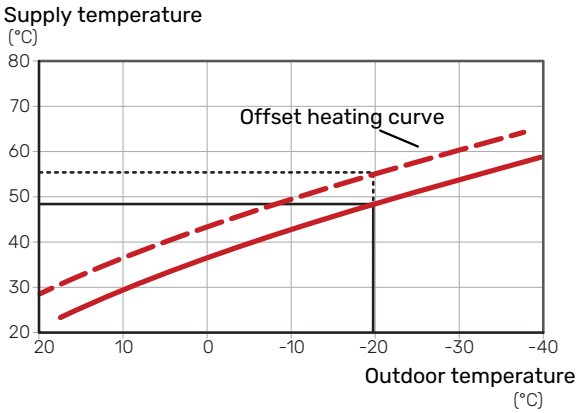

SUPPLY TEMPERATURE – MAXIMUM AND MINIMUM VALUES

Because the supply temperature cannot be calculated higher than the set maximum value or lower than the set minimum value, the curves flatten out at these temperatures.

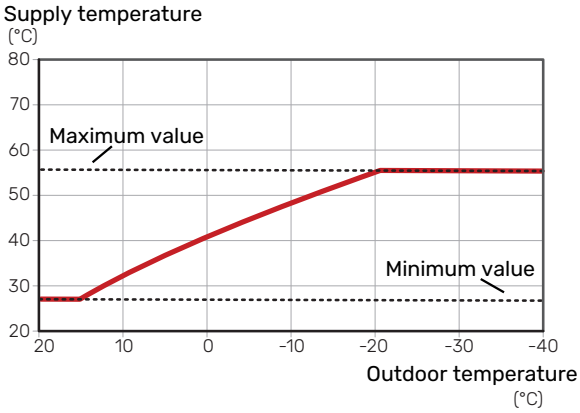

Caution

With underfloor heating systems, the maximum supply temperature is normally set between 35 and 45 °C.

Caution

Must be restricted with underfloor cooling Min. supply temp. cooling to prevent condensation.

ADJUSTMENT OF CURVE

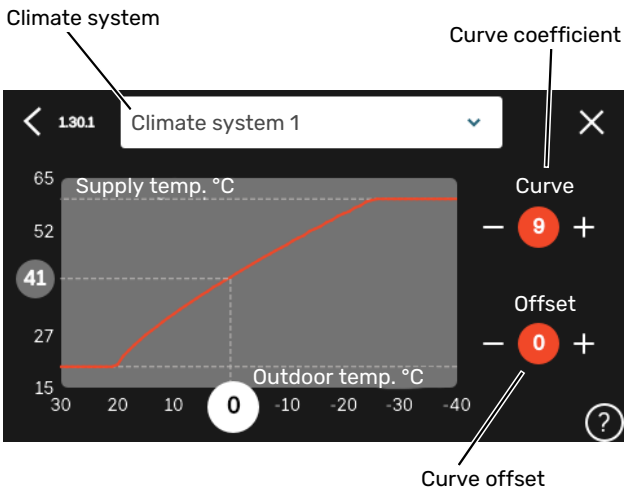

1. Select the climate system (if more than one) for which the curve is to be changed.
2. Select curve and offset.
3. Select max and min supply temperature.

> **Caution**
>
> Curve 0 means that "Own curve" is used.
>
> Settings for "Own curve" are made in menu 1.30.7.

TO READ OFF A HEATING CURVE

1. Drag in the circle on the axis with outdoor temperature.
2. Read off the value for supply temperature in the circle on the other axis.

BASIC VALUES FOR THE AUTOMATIC HEATING CONTROL

The values stated on the map apply to "Curve, heating" in menu 1.30.1.

- The first value applies to low temperature radiator systems[2]. " Temperature" in menu 1.1 must be set to -2.
- The value in brackets refers to underfloor heating systems[3] installed in concrete floor structures.
- When the system is installed in a timber floor structure, you can use the number before the brackets, although this value must be reduced by two units. "Temperature" in menu 1.1 is set to -1 in these cases.

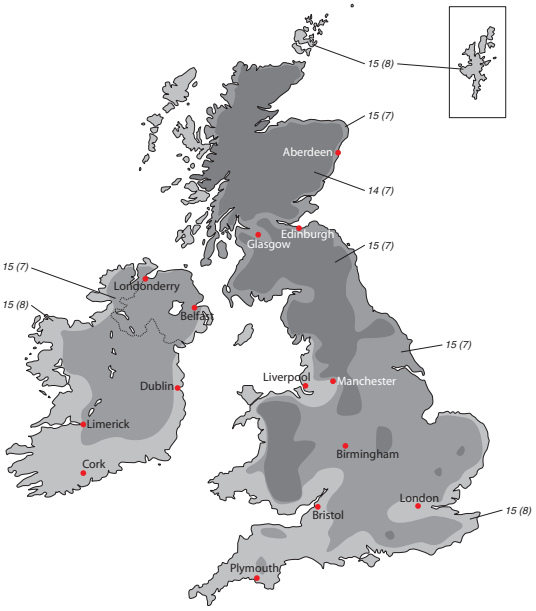

Caution

The map's values are usually a good starting point and are intended to produce a room temperature of approximately 20 °C. The values can be adjusted later, if necessary.

Examples of basic values selection:

- House with low temperature radiator system

  London = Area 15 (8).

  Set 15 in menu 1.30.1, "Curve, heating" and -2 in menu 1.1 " Temperature".

- House with underfloor heating installed in a concrete floor structure

  London = Area 15 (8).

  Set 8 in menu 1.30.1, "Curve, heating" and -2 in menu 1.1 " Temperature".

- House with underfloor heating installed in a timber floor structure

  London = Area 15 (8).

  Set 13 (see third item in the list above) in menu 1.30.1, "Curve, heating" and -1 in menu 1.1 " Temperature".

Caution

An increase in the room temperature can be slowed by the thermostats for the radiators or under floor heating. Therefore, open the thermostat valves fully, except in those rooms where a cooler temperature is required, e.g. bedrooms.

[2] A low-temperature radiator system refers to a system where the supply temperature needs to be 55 °C on the coldest day.

[3] Underfloor heating may be dimensioned very differently. The above example refers to a system where the supply temperature needs to be approximately 35 – 40 °C or 45 – 50 °C on the coldest day.

myUplink

With myUplink you can control the installation – where and when you want. In the event of any malfunction, you receive an alarm directly to your e-mail or a push notification to the myUplink app, which allows you to take prompt action.

Visit myuplink.com for more information.

Specification

You need the following in order for myUplink to be able to communicate with your S1256:

- wireless network or network cable
- Internet connection
- account on myuplink.com

We recommend our mobile apps for myUplink.

Connection

To connect your system to myUplink:

1. Select connection type (wifi/Ethernet) in menu 5.2.1 or 5.2.2.
2. In menu 5.1 you select "Request new connection string".
3. When a connection string has been produced, it is shown in this menu and is valid for 60 minutes.
4. If you do not already have an account, register in the mobile app or on myuplink.com.
5. Use the connection string to connect your installation to your user account on myUplink.

Range of services

myUplink gives you access to various levels of service. The base level is included and, apart from this, you can choose two premium services for a fixed annual fee (the fee varies depending on the functions selected).

Service level	Basic	Premium extended history	Premium change settings
Viewer	X	X	X
Alarm	X	X	X
History	X	X	X
Extended history	-	X	-
Manage	-	-	X

Control - Introduction

Display unit

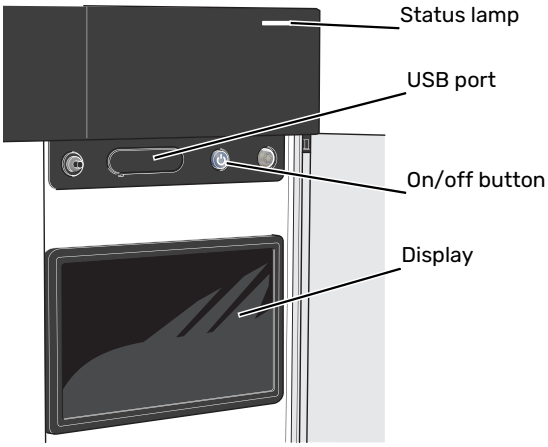

THE STATUS LAMP

The status lamp indicates current operating status. It:

- lights up white during normal operation.
- lights yellow in emergency mode.
- lights red in the event of a deployed alarm.
- flashes white during active notice.
- is blue when S1256 is switched off.

If the status lamp is red, you receive information and suggestions for suitable actions on the display.

TIP

You also receive this information via myUplink.

THE USB PORT

Above the display, there is a USB port that can be used e.g. for updating the software. Log into myuplink.com and click the "General" and then "Software" tab to download the latest version of the software for your installation.

TIP

If you connect the product to the network, you can update the software without using the USB port. See section "myUplink".

THE ON/OFF BUTTON

The on/off button (SF1) has three functions:

- start
- switch off
- activate emergency mode

To start: press the on/off button once.

To switch off, restart or activate emergency mode: press and hold the on/off button for 2 seconds. This brings up a menu with various options.

For hard switch off: press and hold the on/off button for 5 seconds.

To activate emergency mode when S1256 is switched off: press and hold the on/off button (SF1) for 5 seconds. (De-activate the emergency mode by pressing once.)

THE DISPLAY

Instructions, settings and operational information are shown on the display.

Navigation

S1256 has a touchscreen where you simply navigate by pressing and dragging with your finger.

SELECT

Most options and functions are activated by lightly pressing on the display with your finger.



BROWSE

The dots at the bottom edge show that there are more pages.

Drag to the right or left with your finger to browse between the pages.

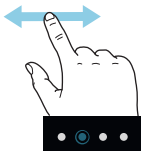

SCROLL

If the menu has several sub-menus, you can see more information by dragging up or down with your finger.

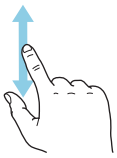

CHANGE A SETTING

Press the setting you want to change.

If it is an on/off setting, it changes as soon as you press it.

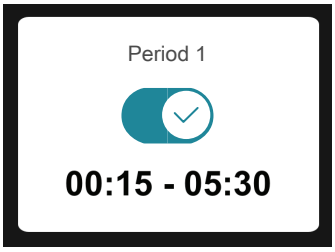

If there are several possible values, a spinning-wheel appears that you drag up or down to find the desired value.

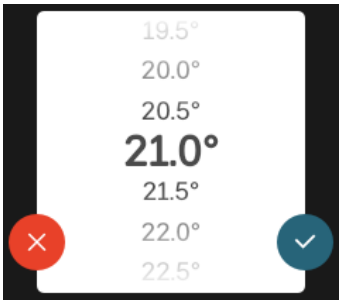

Press ✓ to save your change, or ✗ if you don't want to make a change.

FACTORY SETTING

Factory set values are marked with *.

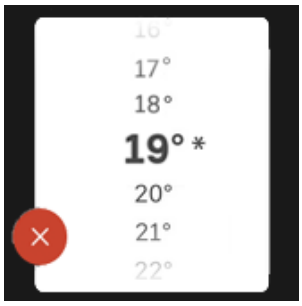

HELP MENU



In many menus there is a symbol that indicates that extra help is available.

Press the symbol to open the help text.

You may need to drag with your finger to see all text.

Menu types

HOME SCREENS

Smartguide

Smartguide helps you both to view information about the current status and to make the most common settings easily. The information that you see depends on the product you have and the accessories that are connected to the product.

Select an option and press it to proceed. The instructions on the screen help you to choose correctly or give you information about what is happening.

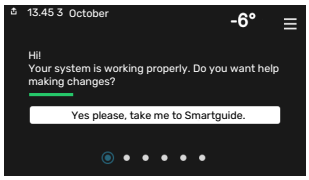

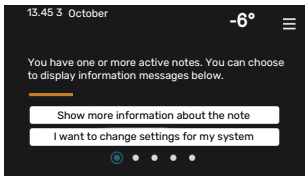

Function pages

On the function pages, you can both view information about the current status and easily make the most common settings. The function pages that you see depend on the product you have and the accessories that are connected to the product.

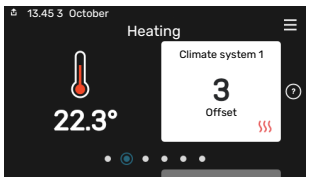

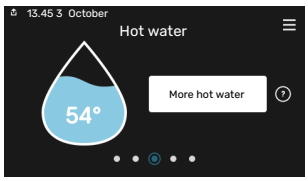



Drag to the right or left with your finger to browse between the function pages.

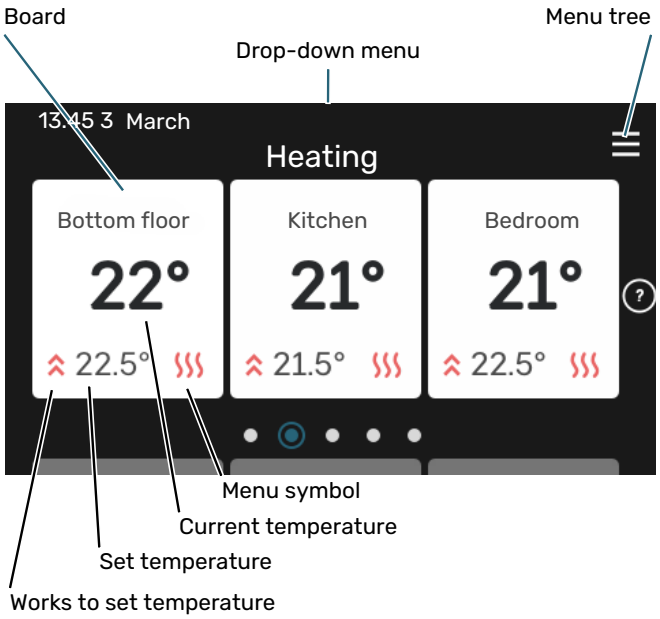

Press the card to adjust the desired value. On certain function pages, drag your finger up or down to obtain more cards.

Product overview

It can be a good idea to have the product overview open during any service cases. You can find it among the function pages.

Here, you can find information about product name, the product's serial number, the version of the software and service. When there is new software to download, you can do it here (provided that S1256 is connected to myUplink).

> **TIP**
>
> You enter the service details in menu 4.11.1.

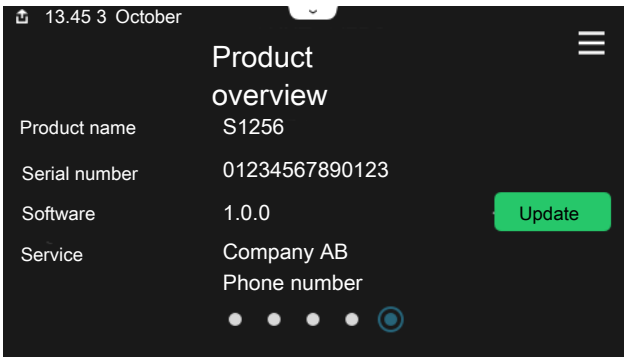

Drop-down menu

From the home screens, you reach a new window containing further information by dragging down a drop-down menu.

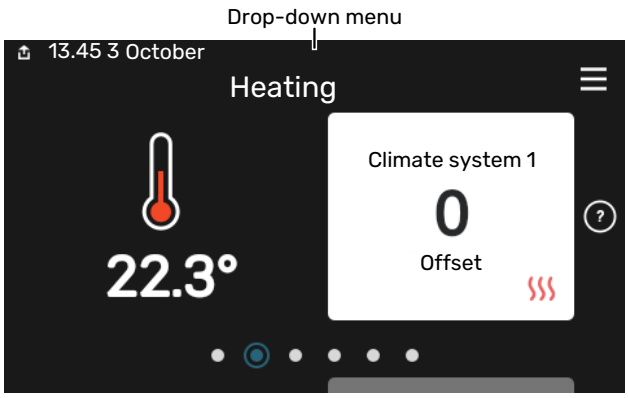

The drop-down menu shows the current status for S1256, what is in operation and what S1256 is doing at the moment. The functions that are in operation are highlighted with a frame.

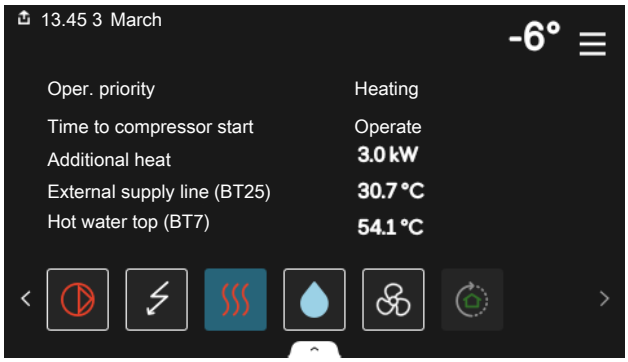

Press the icons on the menu's lower edge for more information about each function. Use the scroll bar to view all information for the selected function.

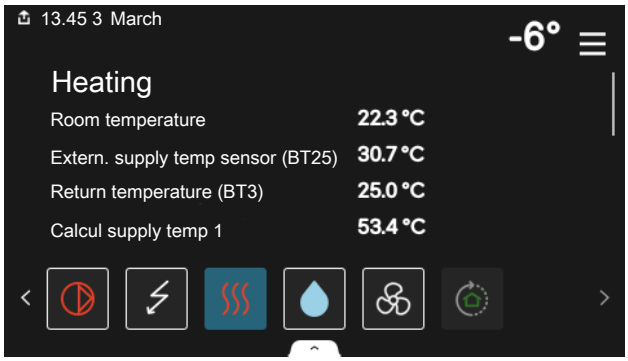

MENU TREE

In the menu tree, you can find all menus and can make more advanced settings.

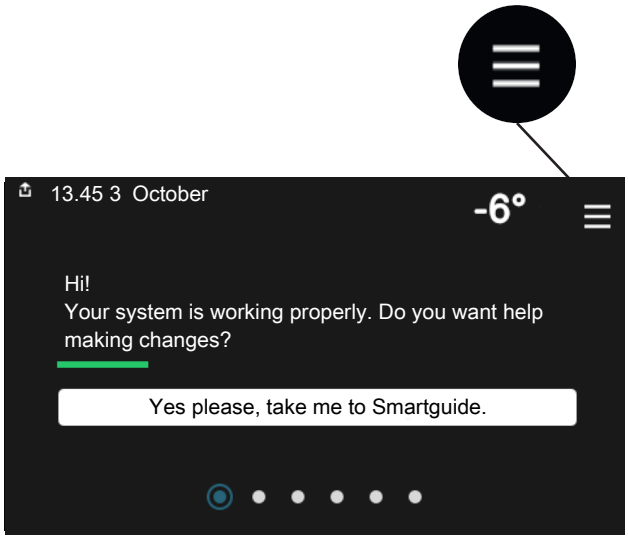

You can always press "X" to return to the home screens.

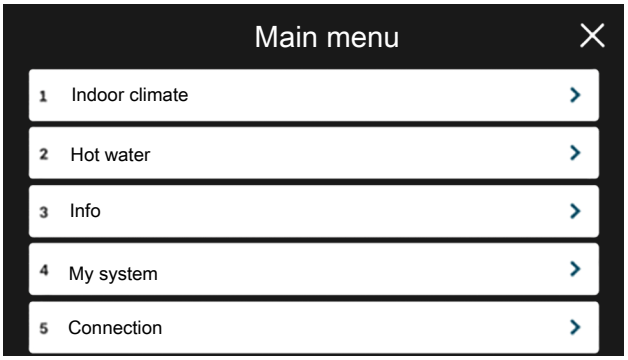

Climate systems and zones

One climate system can contain one or more zones. One zone can be a specific room. It is also possible to divide a large room into several zones, with the help of radiator thermostats.

Each zone can contain one or more accessories, e.g. room sensors or thermostats, both wired and wireless.

A zone can be set with or without the influence of the climate system's supply temperature.

OUTLINE DIAGRAM WITH TWO CLIMATE SYSTEMS AND FOUR ZONES

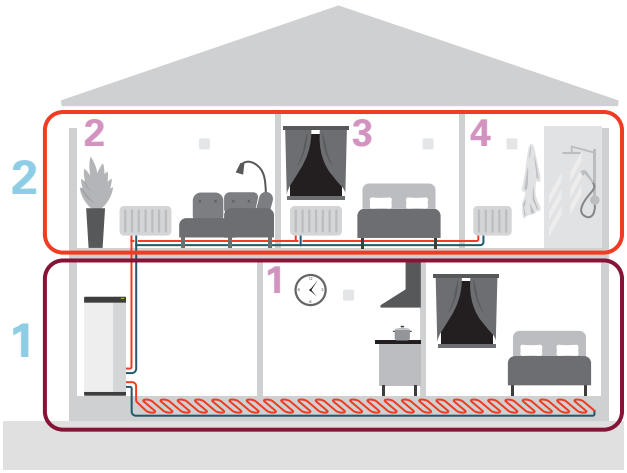

This example shows a property with two climate systems (1 and 2, two separate floors) divided into four zones (1-4, four different rooms). Temperature and demand-controlled ventilation can be controlled individually for each zone (accessory required).

Control - Menus

In multi-installations with several heat pumps, some menus are also visible in the display on the heat pumps that are not the main unit.

Menu 1 - Indoor climate

OVERVIEW

1.1 - Temperature	1.1.1 - Heating
	1.1.2 - Cooling [1]
	1.1.3 - Humidity [1]
1.2 - Ventilation [1]	1.2.1 - Fan speed [1]
	1.2.2 - Night cooling [1]
	1.2.3 - FLM cooling [1]
	1.2.4 - Demand controlled ventilation [1]
	1.2.5 - Fan return time [1]
	1.2.6 - Filter cleaning interval [1]
1.3 - Room sensor settings	1.3.3 - Room sensor settings
	1.3.4 - Zones
1.4 - External influence	
1.5 - Climate system name	
1.30 - Advanced	1.30.1 - Curve, heating
	1.30.2 - Curve, cooling [1]
	1.30.3 - External adjustment
	1.30.4 - Lowest supply heating
	1.30.5 - Lowest supply cooling [1]
	1.30.6 - Highest supply heat
	1.30.7 - Own curve
	1.30.8 - Point offset

[1] Consult the accessory's Installer Manual.

MENU 1.1 - TEMPERATURE

Here, you make temperature settings for your installation's climate system.

If there is more than one zone and/or climate system, the settings are made for each zone/system.

MENU 1.1.1 - HEATING

Set the temperature (with room sensor installed and activated):

Setting range: 5 – 30 °C

The value in the display appears as a temperature in °C, if the zone is controlled by a room sensor.

> **Caution**
>
> A slow heating system such as underfloor heating may be inappropriate for controlling with room sensors.

Setting the temperature (without room sensors activated):

Setting range: -10 – 10

The display shows the set value for heating (curve offset). To increase or reduce the indoor temperature, increase or reduce the value in the display.

The number of steps the value has to be changed in order to achieve a one degree change to the indoor temperature depends on the climate system. One step is usually enough, but in some cases several steps may be required.

If multiple zones in a climate system do not have activated room sensors, these will have the same curve offset.

Set the desired value. The new value is shown on the right-hand side of the symbol on home screen heating.

Caution

An increase in the room temperature can be slowed by the thermostats for the radiators or under floor heating. Therefore, open the thermostats fully, except in those rooms where a cooler temperature is required, e.g. bedrooms.

TIP

If the room temperature is constantly too low/high, you increase/decrease the value by one step in menu 1.1.1.

If the room temperature changes when the outdoor temperature changes, you increase/decrease the curve slope by one step in menu 1.30.1.

Wait 24 hours before making a new setting, so that the room temperature has time to stabilise.

MENU 1.3 - ROOM SENSOR SETTINGS

Here, you make your settings for room sensors and zones. The room sensors are grouped by zone.

Here, you select the zone to which a sensor will belong. It is possible to connect multiple room sensors to each zone. Each room sensor can be given a unique name.

The control of heating and cooling is activated by ticking the relevant option. Which options are shown depends on which type of sensor is installed. If control is not activated, the sensor will be the displaying sensor.

Caution

A slow heating system such as underfloor heating may be inappropriate for controlling with room sensors.

If there is more than one zone and/or climate system, the settings are made for each zone/system.

MENU 1.3.3 - ROOM SENSOR SETTINGS

Name room sensor
Enter a name for the relevant room sensor.

Control room sensor
Alternative: on/off

Here, you select the zone to which a sensor will belong. It is possible to connect multiple room sensors to each zone. Each room sensor can be given a unique name.

The control of heating and cooling is activated by ticking the relevant option. Which options are shown depends on which type of sensor is installed. If control is not activated, the sensor will be the displaying sensor.

Caution

A slow heating system such as underfloor heating may be inappropriate for controlling with room sensors.

If there is more than one zone and/or climate system, the settings are made for each zone/system.

MENU 1.3.4 - ZONES

Here, you add and name zones. You also select the climate system to which a zone is to belong.

MENU1.4 - EXTERNAL INFLUENCE

Information for the accessories/functions that can affect the indoor climate and that are active is shown here.

MENU 1.5 - CLIMATE SYSTEM NAME

You can give the installation's climate system a name here.

MENU 1.30 - ADVANCED

Menu "*Advanced*" is intended for the advanced user. This menu has several sub-menus.

"*Curve, heating*" Setting the heating curve slope.

"*External adjustment*" Setting the heating curve offset when the external contact is connected.

"*Lowest supply heating*" Setting minimum permitted supply temperature during heating operation.

"*Highest supply heat*" Setting maximum permitted supply temperature for the climate system.

"*Own curve*" You can create your own heating curve here, if there are special requirements, by setting the desired supply temperatures for different outdoor temperatures.

"*Point offset*" Select a change in the heating curve at a certain outdoor temperature here. One step is usually enough to change the room temperature by one degree, but in some cases several steps may be required.

MENU 1.30.1 - CURVE, HEATING

Curve, heating
Setting range: 0 – 15

In menu "Curve, heating" you can view the heating curve for your house. The task of the heating curve is to provide an even indoor temperature, regardless of the outdoor temperature. It is from this heating curve that S1256 determines the temperature of the water to the climate system, the supply temperature, and therefore the indoor temperature. Here, you can select heating curve and read off how the supply temperature changes at different outdoor temperatures.

TIP

It is also possible to create your own curve. This is done in menu 1.30.7.

Caution

With underfloor heating systems, the maximum supply temperature is normally set between 35 and 45 °C.

TIP

If the room temperature is constantly too low/high, you increase/decrease the curve offset by one step.

If the room temperature changes when the outdoor temperature changes, you increase/decrease the curve slope by one step.

Wait 24 hours before making a new setting, so that the room temperature has time to stabilise.

MENU 1.30.3 - EXTERNAL ADJUSTMENT

External adjustment
Setting range: -10 – 10

Setting range (if room sensor is installed): 5 – 30 °C

Connecting an external switch, for example a room thermostat or a timer, allows you to raise or lower the room temperature temporarily or periodically. When the switch is on, the heating curve offset is changed by the number of steps selected in the menu. If a room sensor is installed and activated, the desired room temperature (°C) is set.

If there is more than one climate system and/or more than one zone, the setting can be made separately for each system and zone.

MENU 1.30.4 - LOWEST SUPPLY HEATING

Heating
Setting range: 5 – 80 °C

Set the minimum temperature on the supply temperature to the climate system. This means that S1256 never calculates a temperature lower than that set here.

If there is more than one climate system the setting can be made separately for each system.

MENU 1.30.6 - HIGHEST SUPPLY HEAT

Climate system
Setting range: 5 – 80 °C

Here, you set the highest supply temperature for the climate system. This means that S1256 never calculates a temperature higher than the one set here.

If there is more than one climate system the setting can be made separately for each system. Climate systems 2 – 8 cannot be set to a higher max supply temperature than climate system 1.

Caution

With underfloor heating systems, "Maximum supply temperature for heating" should normally be set between 35 and 45°C.

MENU 1.30.7 - OWN CURVE

Own curve, heat

Supply temp
Setting range: 5 – 80 °C

Caution

Curve 0 must be selected for own curve to apply.

You can create your own heating curve here, if there are special requirements, by setting the desired supply temperatures for different outdoor temperatures.

MENU 1.30.8 - POINT OFFSET

Outdoor temp. point
Setting range: -40 – 30 °C

Change in curve
Setting range: -10 – 10 °C

Select a change in the heating curve at a certain outdoor temperature here. One step is usually enough to change the room temperature by one degree, but in some cases several steps may be required.

The heating curve is affected at ± 5°C from set outdoor temp. point.

It is important that the correct heating curve is selected so that the room temperature is experienced as even.

TIP

If it feels cold in the house at e.g. -2°C, "outdoor temp. point" is set to "-2" and "change in curve" is increased until the desired room temperature is maintained.

Caution

Wait 24 hours before making a new setting, so that the room temperature has time to stabilise.

Menu 2 - Hot water

OVERVIEW

2.1 - More hot water
2.2 - Hot water demand
2.3 - External influence
2.4 - Periodic increase
2.5 - Hot water circulation

MENU 2.1 - MORE HOT WATER

Alternatives: 3, 6, 12, 24 and 48 hours, and modes "Off" and "One-time incr."

When there is a temporary increase in hot water demand, this menu can be used to select an increase in the hot water temperature for a selectable time.

If the hot water temperature is already sufficiently high, "One-time incr." cannot be activated.

The function is activated directly when a time period is selected. The remaining time for the selected setting is shown to the right.

When the time has run out, S1256 returns to the set demand mode.

Select "Off" to switch off "More hot water".

MENU 2.2 - HOT WATER DEMAND

Alternatives: Small, Medium, Large, Smart control

The difference between the selectable modes is the temperature of the hot tap water. Higher temperature means that the hot water lasts longer.

Small: This mode produces less hot water at a lower temperature than the other alternatives. This mode can be used in smaller households with a small hot water demand.

Medium: Normal mode produces a larger amount of hot water and is suitable for most households.

Large: This mode produces the most hot water at a higher temperature than the other alternatives. In this mode, the immersion heater may be used to partially heat the hot water. In this mode, hot water production is prioritised ahead of heating.

Smart control: With Smart control activated, S1256 continuously learns the previous hot water consumption and, in this way, adjusts the temperature in the water heater for the minimum energy consumption and maximum comfort.

MENU2.3 - EXTERNAL INFLUENCE

Information for the accessories/functions that can affect the hot water operation is shown here.

MENU 2.4 - PERIODIC INCREASE

Period
Setting range: 1 - 90 days

Start time
Setting range: 00:00 - 23:59

Next increase
The date when the next periodic increase will occur is shown here.

To prevent bacterial growth in the water heater, the heat pump and the immersion heater can increase the hot water temperature once at regular intervals.

Here, you can select the length of time between increases in the hot water temperature. The time can be set between 1 and 90 days. Tick/untick "Activated" to start/switch off the function.

MENU 2.5 - HOT WATER CIRCULATION

Operating time
Setting range: 1 – 60 min

Downtime
Setting range: 0 – 60 min

Period

Active days
Alternatives: Monday – Sunday

Start time
Setting range: 00:00 – 23:59

Stop time
Setting range: 00:00 – 23:59

Set hot water circulation for up to five periods per day here. During the set periods, the hot water circulation pump will run according to the settings above.

"Operating time" decide how long the hot water circulation pump must run per operating instance.

"Downtime" decide how long the hot water circulation pump must be stationary between operating instances.

"Period" Here, you set the period of time during which the hot water circulation pump will run, by selecting *Active days*, *Start time* and *Stop time*.



NOTE

Hot water circulation is activated in menu 7.4 "Selectable in/outputs" or via accessory.

Menu 3 - Info

OVERVIEW

3.1 - Operating info[1]
3.2 - Temperature log
3.3 - Energy log
3.4 - Alarm log
3.5 - Product info, summary
3.6 - Licences

[1] This menu is also shown in any installed subordinate heat pump's limited menu system.

MENU 3.1 - OPERATING INFO

Information about the installation's current operating status (e.g. current temperatures) can be obtained here. In multi-installations, with several interconnected heat pumps, information about these is also shown in this menu. No changes can be made.

You can also read off operating information from all your connected wireless units.

A QR code appears on one side. This QR code indicates serial number, product name and limited operating data.

MENU 3.2 - TEMPERATURE LOG

Here you can see the average temperature indoors week by week over the past year.

The average outdoor temperature is only shown if a room temperature sensor/room unit is installed.

In installations with ventilation accessories and no room sensors (BT50), the exhaust air temperature is displayed instead.

MENU 3.3 - ENERGY LOG

Number of years
Setting range: 1 – 10 years

Months
Setting range: 1 – 24 months

Here, you can see a diagram showing how much energy S1256 supplies and consumes. You can select which parts of the installation will be included in the log. It is also possible to activate display of indoor and/or outdoor temperature.

Number of years: Here, you select how many years will be shown in the diagram.

Months: Here, you select how many months will be shown in the diagram.

MENU 3.4 - ALARM LOG

To facilitate troubleshooting, the installation's operating status at the time of an alarm is stored here. You can see information for the 10 most recent alarms.

To view operating status in the event of an alarm, select the relevant alarm from the list.

MENU 3.5 - PRODUCT INFO, SUMMARY

Here, you can see general information about your system, such as software versions.

MENU 3.6 - LICENCES

You can view licences for open source code here.

Menu 4 - My system

OVERVIEW

4.1 - Operating mode	
4.2 - Plus functions	4.2.2 - Solar electricity[1]
	4.2.3 - SG Ready
	4.2.5 - Smart Price Adaption™
4.3 - Profiles[1]	
4.4 - Weather control	
4.5 - Away mode	
4.6 - Smart Energy Source™	
4.7 - Energy price	4.7.1 - Variable electricity price
	4.7.3 - Shunt-controlled additional heat[1]
	4.7.4 - Step-controlled additional heat[1]
	4.7.6 - External additional heat[1]
4.8 - Time and date	
4.9 - Language	
4.10 - Country	
4.11 - Tools	4.11.1 - Installer details
	4.11.2 - Sound when pressing button
	4.11.4 - Home screen
	4.11.6 - Defrost collector
4.30 - Advanced	4.30.4 - Fact. settings user

1 Consult the accessory's Installer Manual.

MENU 4.1 - OPERATING MODE

Operating mode
Alternative: Auto, Manual, Add. heat only

Manual
Alternative: Compressor, Add. heat, Heating

Add. heat only
Alternative: Heating

The operating mode for S1256 is normally set to "Auto". It is also possible to select operating mode "Add. heat only". Select "Manual" to choose that functions will be activated.

If "Manual" or "Add. heat only" is selected, selectable options are shown further down. Tick the functions you want to activate.

Operating mode "Auto"

In this operating mode, S1256 automatically selects which functions are permitted.

Operating mode "Manual"

In this operating mode you can select what functions are permitted.

"Compressor" is the unit that produces heating and hot water for the home. You cannot deselect "compressor" in manual mode.

"Add. heat" is the unit that helps the compressor to heat the home and/or the hot water when it cannot manage the entire requirement alone.

"Heating" means you obtain heating in the home. You can deselect the function when you do not wish to have the heating on.

Caution

If you deselect "Add. heat" it may mean that insufficient hot water and/or heating in the accommodation is achieved.

Operating mode "Add. heat only"

In this operating mode the compressor is not active, only additional heat is used.

Caution

If you choose mode "Add. heat only" the compressor is deselected and there is a higher operating cost.

MENU 4.2 - PLUS FUNCTIONS

Settings for any additional functions installed in S1256 can be made in the sub menus.

MENU 4.2.3 - SG READY

Here, you set the part of your climate system (e.g. room temperature) that will be affected on activation of "SG Ready". The function can only be used in mains networks that support the "SG Ready" standard.

Affect room temperature

With low price mode on "SG Ready", the parallel offset for the indoor temperature is increased by "+1". If a room sensor is installed and activated, the desired room temperature is increased instead by 1 °C.

With overcapacity mode on "SG Ready", the parallel offset for the indoor temperature is increased by "+2". If a room sensor is installed and activated, the desired room temperature is increased by 2 °C instead.

Affect hot water

With low price mode on "SG Ready", the stop temperature for the hot water is set as high as possible with compressor operation only (immersion heater not permitted).

In the case of overcapacity mode on "SG Ready", the hot water is set to large demand mode (immersion heater permitted).

> **NOTE**
>
> The function must be connected to two AUX inputs and be activated in menu 7.4 "Selectable in/outputs".

MENU 4.2.5 - SMART PRICE ADAPTION™

Range
Alternative: on/off

Affect room temp heating
Alternative: on/off

Degree of effect
Setting range: 1 – 10

Affect hot water
Alternative: on/off

Degree of effect
Setting range: 1 – 4

Deactivate Smart control (HW)
Alternative: on/off[4]

This function can only be used if your electricity supplier supports Smart price adaption™, if you have an hourly tariff agreement and an active myUplink account.

Smart price adaption™ adjusts some of the installation's consumption during the day to those periods with the cheapest electricity tariff, which can provide savings if you are on an hourly rate based electricity contract. The function is based on downloading hourly rates for the next day via myUplink, and for this reason an Internet connection and an account for myUplink are required.

Range: Contact your electricity supplier for information about which area (zone) the installation belongs to.

Degree of effect: You can choose which parts of the installation will be affected by the electricity price and to what extent; the higher value you select, the greater the effect the electricity price has.

> **NOTE**
>
> A value that is set high may result in increased savings, but may also affect the comfort.

MENU 4.4 - WEATHER CONTROL

Activate weath. contr.
Alternative: on/off

Factor
Setting range: 0 – 10

You can select whether you want S1256 to adjust the indoor climate based on the weather forecast here.

You can set factor for outdoor temperature. The higher the value, the greater the effect from the weather forecast.

> **Caution**
>
> This menu is only visible if the installation is connected to myUplink.

MENU 4.5 - AWAY MODE

In this menu, you activate/deactivate "Away mode".

When away mode is activated, the following functions are affected:

- the setting for heating is lowered slightly
- the setting for cooling is raised slightly (if cooling accessory is installed)
- the hot water temperature is lowered if demand mode "large" or "medium" is selected
- The AUX function "Away mode" is activated.

If you want, you can select for the following functions to be affected:

- ventilation (accessory is required)
- hot water circulation (accessory or use of AUX is required)

[4] See menu 2.2 for more information about Smart Control.

MENU 4.6 -SMART ENERGY SOURCE™

> **NOTE**
> Smart Energy Source™ requires external additional heat.

Smart Energy Source™
Alternative: on/off

Control method
Setting options: Price per kWh / CO2

If Smart Energy Source™ is activated, S1256 prioritises how/to what extent each docked energy source will be used. Here, you can select whether the system will use the energy source that is cheapest at the time or the one that is most carbon dioxide neutral at the time.

> **Caution**
> Your choices in this menu affect menu 4.7 - "Energy price".

MENU 4.7 - ENERGY PRICE
Here you can use tariff control for your additional heat.

Here you can choose whether the system is to exercise control based on the spot price, tariff control or a set price. The setting is made for each individual energy source. Spot price can only be used if you have an hourly tariff agreement with your electricity supplier.

Set the lower tariff periods. It is possible to set two different date periods per year. Within these periods, it is possible to set up to four different periods on weekdays (Monday to Friday) or four different periods on weekends (Saturdays and Sundays).

> **Caution**
> This menu is only visible if Smart Energy Source is activated.

MENU 4.7.1 - VARIABLE ELECTRICITY PRICE
Here you can use tariff control for the electric additional heat.

Set the lower tariff periods. It is possible to set two different date periods per year. Within these periods, it is possible to set up to four different periods on weekdays (Monday to Friday) or four different periods on weekends (Saturdays and Sundays).

MENU 4.8 - TIME AND DATE
Set time and date, display mode and time zone here.

> **TIP**
> Time and date are set automatically if connected to myUplink. To obtain the correct time, the time zone must be set.

MENU 4.9 - LANGUAGE
Choose the language that you want the information to be displayed in here.

MENU 4.10 - COUNTRY
Here, you specify the country in which the product has been installed. This allows access to country-specific settings in your product.

Language settings can be made regardless of this selection.

> **NOTE**
> This option locks after 24 hours, restart of display or program updating. Afterwards, it is not possible to change the country selected in this menu without first replacing components in the product.

MENU 4.11 - TOOLS
Here, you can find tools for use.

MENU 4.11.1 - INSTALLER DETAILS
The installer's name and telephone number are entered in this menu.

Afterwards, the details are visible in the home screen, "Product overview".

MENU 4.11.2 - SOUND WHEN PRESSING BUTTON

Alternative: on/off

Here you choose if you want to hear a sound when you press buttons on the display.

MENU 4.11.4 - HOME SCREEN

Alternative: on/off

Here, you choose which home screens you want to be displayed.

The number of options in this menu varies depending on which products and accessories are installed.

MENU 4.11.6 - DEFROST COLLECTOR

Alternative: on/off

Here, you can choose to activate defrosting of the collector. The compressor is then blocked.

The function is active for 30 minutes or switched off when the temperature sensor, condenser supply (BT12) becomes too cold.

NOTE

The function is activated in menu 7.2.1 "Add/remove accessories".

MENU 4.30 - ADVANCED

Menu "Advanced" is intended for advanced users.

MENU 4.30.4 - FACT. SETTINGS USER

All settings that are available to the user (including advanced menus) can be reset to default values here.

Caution

After the factory setting, personal settings such as the heating curve must be reset.

Menu 5 - Connection

OVERVIEW

5.1 - myUplink	
5.2 - Network settings	5.2.1 - wifi
	5.2.2 - Ethernet
5.4 - Wireless units	
5.10 - Tools	5.10.1 - Direct connection

MENU 5.1 – MYUPLINK

Here, you obtain information about the installation's connection status, serial number and how many users and service partners are connected to the installation. A connected user has a user account in myUplink, which has been given permission to control and/or monitor your installation.

You can also manage the installation's connection to myUplink and request a new connection string.

It is possible to switch off all users and service partners who are connected to the installation via myUplink.

> **NOTE**
>
> After disconnecting all users none of them can monitor or control your installation via myUplink without requesting a new connection string.

MENU 5.2 – NETWORK SETTINGS

Here, you choose whether your system connects to the Internet via wifi (menu 5.2.1) or via a network cable (Ethernet) (menu 5.2.2).

Here, you can set TCP/IP settings for your installation.

To set the TCP/IP settings with the aid of DHCP, activate "Automatic".

During manual setting, select "IP address" and enter the correct address using the keyboard. Repeat the procedure for "Network mask", "Gateway" and "DNS".

> **Caution**
>
> The installation cannot connect to the Internet without the correct TCP/IP settings. If you are unsure about applicable settings, use the "Automatic" mode or contact your network administrator (or equivalent) for further information.

> **TIP**
>
> All settings made since opening the menu can be reset by selecting "Reset".

MENU 5.4 – WIRELESS UNITS

In this menu you connect wireless units, and manage settings for connected units.

Add the wireless unit by pressing "Add unit". For the quickest identification of a wireless unit, it is recommended that you put your master unit in search mode first. Then put the wireless unit in identification mode.

MENU 5.10 – TOOLS

As the installer, you cane.g. connect an installation via an app here, by activating an access point for direct connection to a mobile phone.

MENU 5.10.1 – DIRECT CONNECTION

You can activate direct connection via Wi-Fi here. This means that the installation will lose communication with the relevant network, and that you instead make settings on your mobile unit that you connect to the installation.

Menu 6 - Scheduling

OVERVIEW

6.1 - Holiday
6.2 - Scheduling

MENU 6.1 - HOLIDAY

In this menu, you schedule longer changes in heating and hot water temperature.

You can also schedule settings for certain installed accessories.

If a room sensor is installed and activated, the desired room temperature (°C) is set during the time period.

If a room sensor is not activated, the desired offset of the heating curve is set. One step is usually enough to change the room temperature by one degree, but in some cases several steps may be required.

TIP

Stop the holiday setting about a day before your return so that room temperature and hot water have time to return to their usual levels.

Caution

Holiday settings finish on the selected date. If you want to repeat the holiday setting once the end date has passed, go into the menu and change the date.

MENU 6.2 - SCHEDULING

In this menu, you schedule repeated changes of heating and hot water, for example.

You can also schedule settings for certain installed accessories.

Caution

A schedule repeats according to the selected setting (e.g. every Monday) until you go into the menu and switch it off.

A mode contains settings that will apply to scheduling. Create a mode with one or more settings by pressing "New mode".

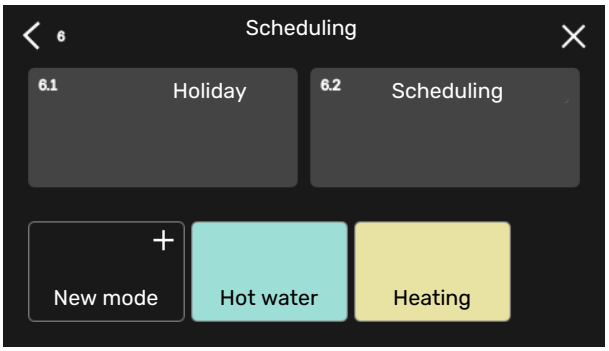

Select the settings that the mode will contain. Drag to the left with your finger to select mode name and colour to make it unique and to distinguish it from other modes.

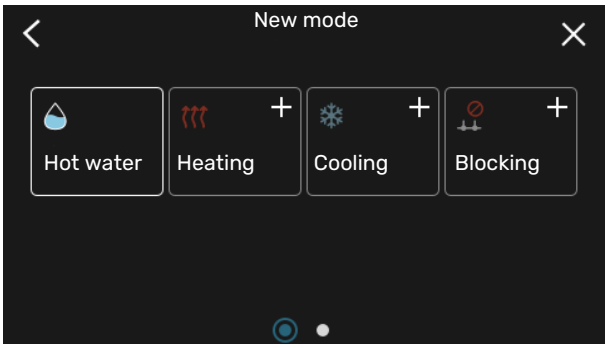

Select an empty row and press it to schedule a mode, and adjust as required. You can enter a tick, if a mode is to be active during the day or overnight.

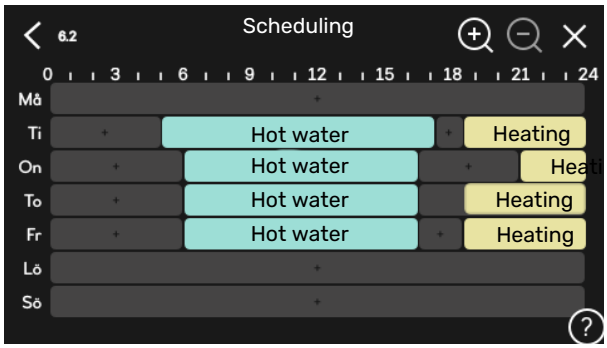

If a room sensor is installed and activated, the desired room temperature (°C) is set during the time period.

If a room sensor is not activated, the desired offset of the heating curve is set. One step is usually enough to change the room temperature by one degree, but in some cases several steps may be required.

Menu 7 - Installer settings

OVERVIEW

7.1 - Operating settings [1]	7.1.1 - Hot water	7.1.1.1 - Temperature setting
	7.1.2 - Circulation pumps	7.1.2.1 - Op. mode HM pump GP1 [1]
		7.1.2.2 - Pp sp. heating medium GP1 [1]
		7.1.2.6 - Operating mode brine pump [1]
		7.1.2.7 - Pump speed brine [1]
		7.1.2.8 - Brine alarm setting
	7.1.3 - Compressor	7.1.3.1 - BlockFreq
	7.1.4 - Ventilation [2]	7.1.4.1 - Fan speed, exhaust air [2]
		7.1.4.2 - Fan speed, supply air [2]
		7.1.4.3 - Fine-tuning the ventilation [2]
		7.1.4.4 - Demand contr. ventilation [2]
	7.1.5 - Add. heat	7.1.5.1 - Int elec add heat
	7.1.6 - Heating	7.1.6.1 - Max diff supply temp
		7.1.6.2 - Flow settings, climate sys
		7.1.6.3 - Power at DOT
		7.1.6.4 - Limit RH in heat [2]
	7.1.7 - Cooling [2]	7.1.7.1 - Cooling settings [2]
		7.1.7.2 - Humidity control [2]
		7.1.7.3 - System settings cooling [2]
	7.1.8 - Alarms	7.1.8.1 - Alarm actions
		7.1.8.2 - Emergency mode
	7.1.9 - Load monitor	
	7.1.10 - System settings	7.1.10.1 - Operating prioritisation
		7.1.10.2 - Auto mode setting
		7.1.10.3 - Degree minute settings
7.2 - Accessory settings [2]	7.2.1 - Add/remove accessories	
	7.2.19 - External energy meter	
7.3 - Multi-installation	7.3.1 - Configure	
	7.3.2 - Installed heat pumps	
	7.3.3 - Name heat pump	
	7.3.4 - Docking	
	7.3.5 - Serial number	
7.4 - Selectable in/outputs		
7.5 - Tools	7.5.1 - Heat pump, test	7.5.1.1 - Test mode
	7.5.2 - Underfloor drying function	
	7.5.3 - Forced control	
	7.5.6 - Inverter replacement	
	7.5.8 - Screen lock	
	7.5.9 - Modbus TCP/IP	
7.6 - Factory setting service		
7.7 - Start guide		
7.8 - Quick start		
7.9 - Logs	7.9.1 - Change log	
	7.9.2 - Extended alarm log	
	7.9.3 - Black box	

1 This menu is also shown in any installed subordinate heat pump's limited menu system.

2 Consult the accessory's Installer Manual.

MENU 7.1 - OPERATING SETTINGS

Make operating settings for the system here.

MENU 7.1.1 - HOT WATER

This menu contains advanced settings for hot water operation.

MENU 7.1.1.1 - TEMPERATURE SETTING

Start temperature

Demand mode, small/medium/large
Setting range: 5 – 70 °C

Stop temperature

Demand mode, small/medium/large
Setting range: 5 – 70 °C

Stop temp. periodic increase
Setting range: 55 – 70 °C

Start temp. and stop temp. demand mode, small/medium/large: Here, you set the start and stop temperature of the hot water for the different demand modes (menu 2.2).

Stop temp. periodic increase: Here, you set the stop temperature for periodic increase (menu 2.4).

MENU 7.1.2 - CIRCULATION PUMPS

This menu contains sub-menus where you can make advanced circulation pump settings.

MENU 7.1.2.1 - OP. MODE HM PUMP GP1

Operating mode
Options: Auto, Intermittent

Auto: The heating medium pump runs according to the current operating mode for S1256.

Intermittent: The heating medium pump starts approx. 20 seconds before and stops 20 seconds after the compressor.

> **Caution**
>
> The selection "Intermittent" is only available in installations with external supply temperature sensor (BT25).

MENU 7.1.2.2 - PP SP. HEATING MEDIUM GP1

Heating

Auto
Alternative: on/off

Manual speed
Setting range: 1 - 100 %

Minimum permitted speed
Setting range: 1 - 50 %

Maximum permitted speed
Setting range: 80 - 100 %

Speed in wait mode
Setting range: 1 - 100 %

Hot water

Auto
Alternative: on/off

Manual speed
Setting range: 1 - 100 %

Pool

Auto
Alternative: on/off

Manual speed
Setting range: 1 - 100 %

Make settings here for the heating medium pump's speed in the current operating mode, for example in heating or hot water operation. Which operating modes can be changed depends on which accessories are connected.

Heating

Auto: Here, you set whether the heating medium pump is to be regulated automatically or manually.

Manual speed: If you have opted to control the heating medium pump manually, you set the desired pump speed here.

Minimum permitted speed: Here, you can restrict the pump speed to ensure that the heating medium pump is not allowed to operate at a lower speed in auto mode than the set value.

Maximum permitted speed: Here, you can restrict the pump speed to ensure that the heating medium pump is not allowed to operate at a higher speed than the set value.

Speed in wait mode: Here, you set the speed the heating medium pump will have in standby mode. Standby mode occurs when heating operation is permitted but there is no need for either compressor operation or electric additional heat.

Hot water

Auto: Here, you set whether the heating medium pump is to be regulated automatically or manually in hot water mode.

Manual speed: If you have opted to control the heating medium pumps manually, you set the desired pump speed here in hot water mode.

Pool

Auto: Here, you set whether the heating medium pump is to be regulated automatically or manually during pool charging.

Manual speed: If you have opted to control the heating medium pumps manually, you set the desired pump speed here during pool charging.

MENU 7.1.2.6 - OPERATING MODE BRINE PUMP

Operating mode
Alternative: Intermittent, Continuous, 10 days cont.

Intermittent: The brine pump starts approx. 20 seconds before or after the compressor. For groundwater systems, the brine pump starts and stops 2 minutes before and after the compressor respectively.

Continuous: Continuous operation.

10 days cont.: Continuous operation for 10 days. The pump then changes to intermittent operation.



TIP

You can use “10 days cont." at start-up to obtain continuous circulation during a start-up time in order to make it easier to bleed the system.

MENU 7.1.2.7 - PUMP SPEED BRINE

Make settings for the brine pump's speed here.

Operating mode
Setting range: Fixed delta, Auto, Manual

Delta-T, fixed delta
Setting range: 2 - 10 °C

Manual
Setting range: 1 - 100 %

Operating mode: Here, you set whether the brine pump is to be controlled automatically, manually or with fixed delta.

Fixed delta: Here, you set whether the brine pump will be controlled with fixed delta, e.g. for groundwater systems.

Manual: If you have chosen to control the brine pump manually, you set the desired pump speed here.

Speed in wait mode, cooling: Here, you set the speed at which the brine pump will operate in standby mode when passive cooling is permitted.

MENU 7.1.2.8 - BRINE ALARM SETTING

Automatic reset
Alternative: on/off

Alarm temperature
Setting range: -12 – 15 °C

Max brine in
Setting range: 10 – 35 °C

Automatic reset: Select "automatic reset" if you want S1256 to start automatically after brine alarm.

Alarm temperature: Here, you set the temperature at which the heat pump will activate the alarm for low temperature in outgoing brine.

If "Automatic reset" is selected, the alarm resets when the temperature has increased by 1 °C above the set value.

Max brine in: Here, you set the temperature at which the heat pump will activate the alarm for high temperature in the incoming brine. During start-up, it is permitted for a limited time to have a temperature of 5 °C above "Max brine in".

MENU 7.1.3 - COMPRESSOR

This menu contains sub-menus where you can make advanced compressor settings.

MENU 7.1.3.1 - BLOCKFREQ

Block freq 1 and 2
Setting range start S1256-8 start: 25 – 101 Hz

Setting range stop S1256-8 stop: 30 – 106 Hz

Setting range start S1256-13 start: 20 – 90 Hz

Setting range stop S1256-13 stop: 25 – 95 Hz

Maximum setting range: 50 Hz

Here you can set a frequency range where the compressor is blocked. The limits for the setting range can differ depending on model of heat pump.



NOTE

A large blocked frequency range can cause the compressor to run jerkily.

MENU 7.1.5 - ADD. HEAT

This menu contains sub-menus where you can make advanced additional heat settings.

MENU 7.1.5.1 - INT ELEC ADD HEAT

Max. set electrical power
Setting range S1256-8 1x230 V: 0 - 4.5 kW

Setting range S1256-13 1x230 V: 0 - 7 kW

Max set el power (SG Ready)
Setting range 1x230V: 0 – 7 kW

Here you set the max electrical power for the internal electric additional heat in S1256, during normal operation and in overcapacity mode (SG Ready).

MENU 7.1.6 - HEATING

This menu contains sub-menus where you can make advanced settings for heating operation.

MENU 7.1.6.1 - MAX DIFF SUPPLY TEMP

Max diff compressor
Setting range: 1 – 25 °C

Max diff additional heat
Setting range: 1 – 24 °C

BT12 offset
Setting range: -5 – 5 °C

Here you set the maximum permitted difference between the calculated and actual supply temperature in the event of compressor or additional heat mode respectively. Max difference additional heat can never exceed max difference compressor

Max diff compressor: If the current supply temperature *exceeds* the calculated supply line by the set value, the degree minute value is set to 1. The compressor stops when there is only a heating demand.

Max diff additional heat: If "Additional heat" is selected and activated in menu 4.1 and the current supply temperature *exceeds* the calculated temperature by the set value, the additional heat is forced to stop.

BT12 offset: If there is a difference between temperature sensor, heating medium supply (BT25), and temperature sensor, condenser supply (BT12), you can set a fixed offset here to compensate for the difference.

MENU 7.1.6.2 - FLOW SETTINGS, CLIMATE SYS

Setting
Options: Radiator, Underfl heating, Rad + Und. heat., Own setting

DOT
Setting range DOT: -40.0 – 20.0 °C

Delta temp at DOT
Setting range dT at DOT: 0.0 – 25.0 °C

The type of heating distribution system the heating medium pump works towards is set here.

dT at DOT is the difference in degrees between supply and return temperatures at design outdoor temperature.

MENU 7.1.6.3 - POWER AT DOT

Manually selected power at DOT
Alternative: on/off

Power at DOT
Setting range: 1 – 1,000 kW

Here, you set the power the property requires at DOT (dimensioned outdoor temperature).

If you choose not to activate "Manually selected power at DOT", the setting is made automatically, i.e. S1256 calculates suitable power at DOT.

MENU 7.1.8 - ALARMS

In this menu, you make settings for the safety measures that S1256 will implement in the event of any operational disruption.

MENU 7.1.8.1 - ALARM ACTIONS

Reduce room temperature
Alternative: on/off

Stop producing HW
Alternative: on/off

Audio signal on alarm
Alternative: on/off

Select how you want the S1256 to alert you that there is an alarm in the display here.

The different alternatives are that S1256 stops producing hot water and/or reduces the room temperature.



Caution

If no alarm action is selected, this can result in higher energy consumption in the event of a malfunction.

MENU 7.1.8.2 - EMERGENCY MODE

Immersion heater output
Setting range: 4 – 7 kW

Settings are made in this menu for how the additional heat will be controlled in emergency mode.



Caution

In emergency mode, the display is switched off. If you feel the selected settings are insufficient in emergency mode, you will not be able to change these.

MENU 7.1.9 - LOAD MONITOR

Fuse size
Setting range: 1 – 400 A

Transformer ratio
Setting range: 300 – 3,000

Here, you set fuse size and transformer ratio for the system. The transformer ratio is the factor that is used to convert the metered voltage to current.

MENU 7.1.10 - SYSTEM SETTINGS

You make your various system settings for your installation here.

MENU 7.1.10.1 - OPERATING PRIORITISATION

Auto mode
Alternative: on/off

Min
Setting range: 0 – 180 minutes

Here, you select how long the installation will work with each demand, if there are several simultaneous demands.

"Operating prioritisation" is normally set in "Auto", but it is also possible to set prioritisation manually.

Auto: In auto mode, S1256 optimises operating times between different requirements.

Manual: You select how long the installation will work with each demand, if there are several demands at the same time.

If there is only one demand, the installation works with that demand.

If 0 minutes are selected, this means that the demand is not prioritised, but will instead only be activated when there is no other demand.

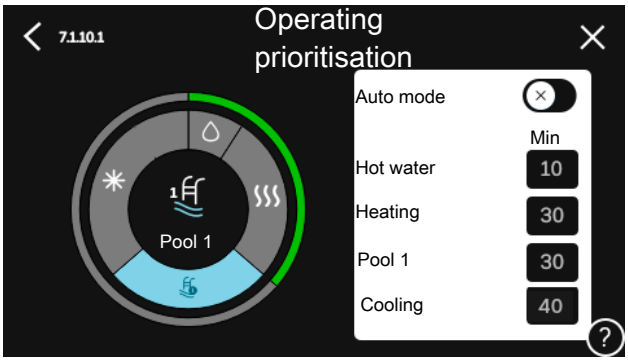

MENU 7.1.10.2 - AUTO MODE SETTING

Stop heating
Setting range: -20 – 40 °C

Stop additional heat
Setting range: -25 – 40 °C

Filtering time heating
Setting range: 0 – 48 h

Stop heating, Stop additional heat: In this menu, you set the temperatures that the system will use for control in auto mode.

> **Caution**
>
> It cannot be set "Stop additional heat" higher than "Stop heating".

Filtering time: You can set the time over which the average outdoor temperature is calculated. If you select 0, the current outdoor temperature is used.

MENU 7.1.10.3 - DEGREE MINUTE SETTINGS

Current value
Setting range: -3,000 – 100 DM

Heating, auto
Alternative: on/off

Start compressor
Setting range: -1,000 – (-30) DM

Relative DM start additional heat
Setting range: 100 – 2,000 DM

Diff. between add heat steps
Setting range: 10 – 1,000 DM

Degree minutes cooling
Alternatives: -3,000 – 3,000 DM

Stepping diff compressors
Setting range: 10 – 2,000 DM

DM = degree minutes

Degree Minutes (DM) are a measurement of the current heating/cooling demand in the house and determine when the compressor or additional heat will start/stop.

> **Caution**
>
> Higher value on "Start compressor" gives more compressor starts, which increase wear on the compressor. Too low value can give uneven indoor temperatures.

MENU 7.2 - ACCESSORY SETTINGS

The operating settings for accessories that are installed and activated are made in the sub-menus for this.

MENU 7.2.1 - ADD/REMOVE ACCESSORIES

Here, you tell S1256 which accessories are installed.

To identify connected accessories automatically, select "Search for accessories". It is also possible to select accessories manually from the list.

MENU 7.2.19 - PULSE ENERGY METER

Activated
Alternative: on/off

Set mode
Alternatives: Energy per pulse / Pulses per kWh

Energy per pulse
Setting range: 0 – 10000 Wh

Pulses per kWh
Setting range: 1 – 10000

Up to two electricity meters or energy meters (BE6-BE7) can be connected to S1256.

Energy per pulse: Here you set the amount of energy to which each pulse will correspond.

Pulses per kWh: Here, you set the number of pulses per kWh that are sent to S1256.

> **TIP**
>
> "Pulses per kWh" is set and presented in whole numbers. If a higher resolution is required, use "Energy per pulse".

MENU 7.3 - MULTI-INSTALLATION

In the sub-menus here, you make settings for the heat pumps that are connected to S1256.

MENU 7.3.1 - CONFIGURE

Multi-installation
Alternative: on/off

System settings
Alternative: Main Unit / Heat Pump 1 – 8

Multi-installation: Here, you specify whether S1256 is part of a multi-installation (one installation with several connected heat pumps).

System settings: Here, you specify whether S1256 is the multi-installation's main unit. In systems with only one heat pump, S1256 will be the main unit. If there is another main unit in the installation, you enter the ID that S1256 will have.

Search installed heat pumps: Here, you can search for, activate or deactivate connected heat pumps.

> **Caution**
>
> In multi-installations, each heat pump must have a unique ID. You enter this for each heat pump that is connected to S1256.

MENU 7.3.2 - INSTALLED HEAT PUMPS

Here, you select the settings that you want to make for each heat pump.

MENU 7.3.3 - NAME HEAT PUMPS

Here, you name the heat pumps that are connected to S1256.

MENU 7.3.4 - DOCKING

Here you set how your system is docked in respect of pipes, in relation to heating the property and any accessories.

> **TIP**
>
> Examples of docking alternatives can be found at nibe.co.uk.

This menu has a docking memory which means that the control system remembers how a particular reversing valve is docked and automatically enters the correct docking the next time you use the same reversing valve.

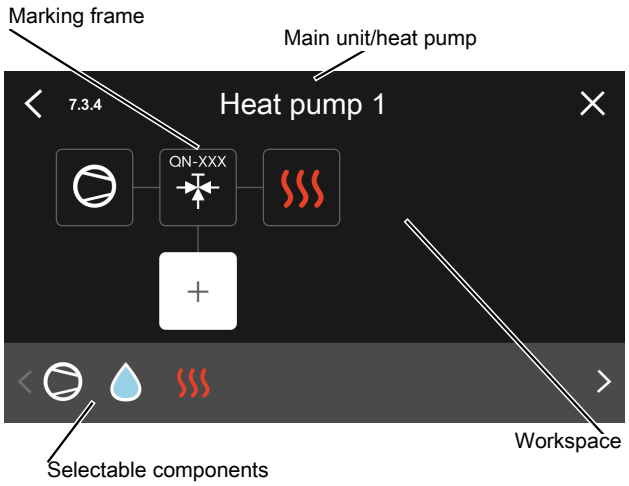

Main unit/heat pump: Here, you select the heat pump for which the docking setting is to be made (if the heat pump is solitary in the system, only the main unit is shown).

Workspace for docking: The system docking is drawn here.

Compressor: Select here if the compressor in the heat pump is blocked (factory setting), externally controlled via a selectable input or standard (docked to hot water charging and heating the building, for example).

Marking frame: Press the marking frame you want to change. Select one of the selectable components.

Symbol	Description
	Blocked
	Compressor (standard)
	Compressor (externally controlled)
	Compressor (blocked)
	Shuttle valve The designations above the reversing valve indicate where it is electrically connected (EB100 = Main unit, EB101 = Heat pump 1, etc.).
	Hot water charging. For a multi-installation: hot water with the main unit and/or shared hot water from several different heat pumps.
	Hot water charging with subordinate heat pump in multi-installation.
	Pool 1
	Pool 2

Symbol	Description
	Heating (heating the building, includes any extra climate system)

MENU 7.3.5 - SERIAL NUMBER

Here, you allocate a serial number for the system's air/water heat pumps. This menu is only shown if at least one connected air/water heat pump does not have a serial number, e.g. after a circuit board has been replaced.

Caution

This menu is only shown if at least one connected heat pump does not have a serial number. (This can occur during service visits.)

MENU 7.4 - SELECTABLE IN/OUTPUTS

Here, you state where the external switch function has been connected, either to one of the AUX inputs on terminal block X28 or to the AUX output on terminal block X27.

MENU 7.5 - TOOLS

Here, you can find functions for maintenance and service work.

MENU 7.5.1 - HEAT PUMP, TEST

NOTE

This menu and its sub-menus are intended for testing the heat pump.

Use of this menu for other reasons may result in your installation not functioning as intended.

MENU 7.5.2 - UNDERFLOOR DRYING FUNCTION

Length period 1 – 7
Setting range: 0 – 30 days

Temperature period 1 – 7
Setting range: 15 – 70 °C

Set the function for under floor drying here.

You can set up to seven time periods with different calculated supply temperatures. If fewer than seven periods are to be used, set the remaining periods to 0 days.

When the underfloor drying function has been activated, a counter is displayed showing the number of full days the function has been active. The function counts degree minutes in the same way as during normal heating operation, but for the supply temperatures that are set for the respective period.

NOTE

During active underfloor drying, the heating medium pump runs at 100 %, regardless of the setting in menu 7.1.2.2.

TIP

If the operating mode "Additional heat only" is to be used, select it in menu 4.1.

For a more even supply temperature, the additional heat can be started earlier by setting "relative DM start additional heat" in menu 7.1.10.3 to -80. When set underfloor drying periods have finished, reset the menus 4.1 and 7.1.10.3 as per previous settings.

MENU 7.5.3 - FORCED CONTROL

Here you can force control the various components in the installation. The most important safety functions remain active however.

NOTE

Forced control is only intended to be used for troubleshooting purposes. Using the function in any other way may cause damage to the components in your installation.

MENU 7.5.6 - INVERTER REPLACEMENT

This menu includes a guide that is used during inverter replacement.

The menu is only visible when communication with the inverter is lost.

MENU 7.5.8 - SCREEN LOCK

Here, you can choose to activate the screen lock for S1256. During activation, you will be asked to enter the required code (four digits). The code is used when:

- deactivating the screen lock.
- changing the code.
- starting up the display when it has been inactive.
- restarting/starting up S1256.

MENU 7.5.9 - MODBUS TCP/IP

Alternative: on/off

Here, you activate Modbus TCP/IP. Read more on page 66.

MENU 7.6 - FACTORY SETTING SERVICE

Here, you can reset all settings (including settings available to the user) to factory values

Also new parametrisation of the inverter can be done here.

NOTE

When resetting, the start guide is displayed the next time S1256 restarts.

MENU 7.7 - START GUIDE

When S1256 is started for the first time, the start guide is automatically activated. From this menu, you can start it manually.

MENU 7.8 - QUICK START

You can quick start the compressor here.

One of the following demands for the compressor must exist for quick start:

- heating
- hot water
- cooling (accessory is required)
- pool (accessory is required)

Caution

Too many quick starts in a short space of time may damage the compressor and its auxiliary equipment.

MENU 7.9 - LOGS

Under this menu, there are logs that collect information about alarms and changes made. The menu is intended to be used for troubleshooting.

MENU 7.9.1 - CHANGE LOG

Read off any previous changes to the control system here.

NOTE

The change log is saved at restart and remains unchanged after factory setting.

MENU 7.9.2 - EXTENDED ALARM LOG

This log is intended to be used for troubleshooting.

MENU 7.9.3 - BLACK BOX

Via this menu, it is possible to export all logs (Change log, Extended alarm log) to USB. Connect a USB memory and select the log(s) you want to export.

Service

Maintenance

> **NOTE**
> Maintenance may only be carried out by persons with the necessary expertise.
>
> When replacing components on S1256 only replacement parts from NIBE may be used.

> **NOTE**
> If an electrical connection has been disconnected and is connected, ground must be checked using a suitable multimeter.

> **NOTE**
> An immersion heater without a temperature limiter is not allowed to be installed.

> **NOTE**
> Inspect and clean the water heater by using a suitable instrument such as an endoscope via the inspection hatch (QQ1).

> **NOTE**
> After servicing, complete the relevant Service Interval Record section of the Benchmark Checklist located at the back of this document.
>
> Completion of the Service Interval Record is a condition of warranty. For full terms and conditions of warranty, please see our website nibe.co.uk.

GENERAL INSPECTION

Check the following:

1. Condition of casing.
2. Electrical connections.
3. Pipe connections.
4. Alarm log.

Correct any fault before continuing.

WATER HEATER

Check the following:

1. Hot water start and stop temperature.
2. Pressure controlled bypass valve.
3. T&P valve.
4. Overflow pipe.
5. Pressure expansion vessel.
6. Expansion relief valve.

Correct any fault before continuing.

BRINE SYSTEM

Check the following:

1. Particle filter.
2. Anti-freeze with suitable refractometer.
3. Expansion vessel.
4. System pressure.
5. Flow and return temperature. The difference must be 2 - 5 °C

Correct any fault before continuing.

CLIMATE SYSTEM

Check the following:

1. Climate system start and stop temperature.
2. Heating curve settings.
3. Function of the room sensor (if installed).
4. System pressure.
5. Flow and return temperature. The difference must be 5 - 10 °C

Correct any fault before continuing.

Service actions

> **NOTE**
> S1256 must be serviced once a year by competent and qualified personnel, such as a NIBE a service engineer or other qualified professional.
>
> When replacing components on S1256 only replacement parts from NIBE may be used.

EMERGENCY MODE

> **NOTE**
> Do not start the system before filling up with water. Components in the system could be damaged.

Emergency mode is used in event of operational interference and in conjunction with service.

When the emergency mode is active, the status lamp is yellow.

You can activate the emergency mode both when S1256 is running and when it is switched off.

To activate when S1256 is running: press and hold the on/off button (SF1) for 2 seconds and select "emergency mode" from the shutdown menu.

To activate emergency mode when S1256 is switched off: press and hold the on/off button (SF1) for 5 seconds. (De-activate the emergency mode by pressing once.)

When S1256 is put in emergency mode, the display is switched off and the most basic functions are active:

- The immersion heater works to maintain the calculated supply temperature. If there is no outdoor temperature sensor (BT1), the immersion heater works to maintain the maximum supply temperature, set in menu 1.30.6 - "Highest supply heat".
- The compressor and the brine pump are off and only the heating medium pump and the electric additional heat are active. Max output for the immersion heater in emergency mode, limited according to the setting in menu 7.1.8.2 - "Emergency mode".

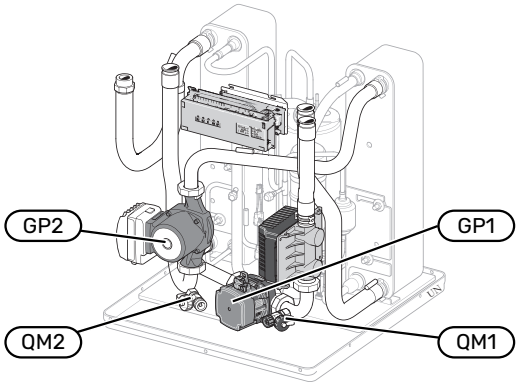

The image shows an example of how a cooling module can appear.

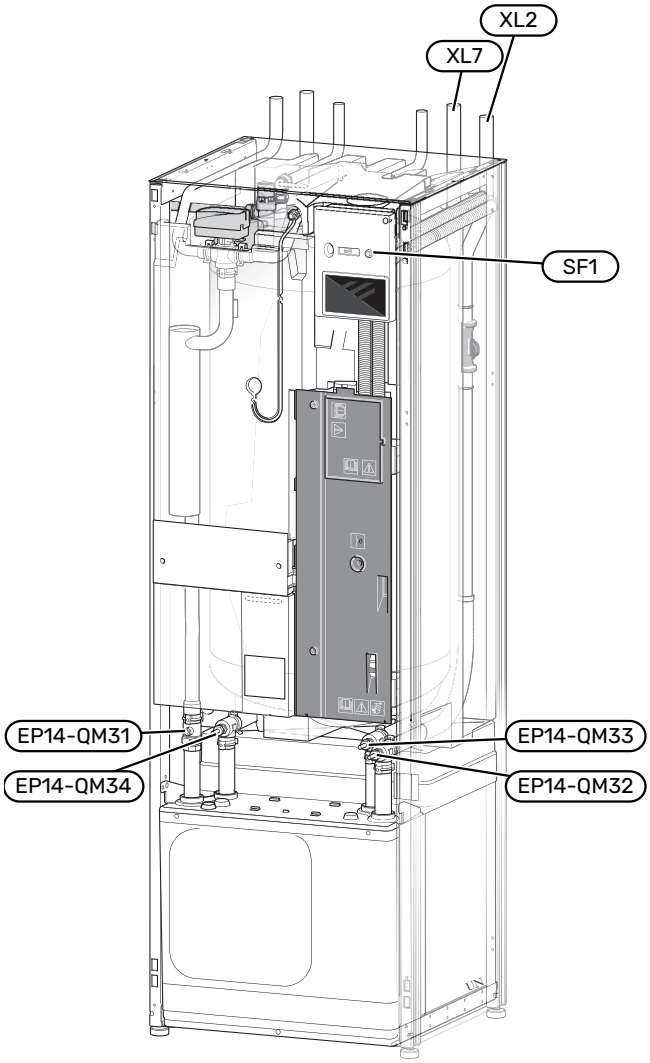

DRAINING THE HOT WATER HEATER

The siphon principle is used to empty the hot water heater. This can be done either via the drain valve on the incoming cold water pipe or by inserting a hose into the cold water connection.

> **NOTE**
>
> There may be some hot water, risk of scalding.

CLEANING THE WATER HEATER

To clean the water heater, remove the upper panel and the insulation. Then open the flange for easy access.

DRAINING THE CLIMATE SYSTEM

In order to carry out service on the climate system, it may be easier to drain the system first. This can be done in different ways depending on what needs doing:

> **NOTE**
>
> There may be some hot water, risk of scalding.

Draining the climate system in the cooling module

If, for example, the heating medium pump needs to be replaced or the cooling module needs to be serviced in some other way, drain the climate system as follows:

1. Close the shut-off valves to the climate system (EP14-QM31) and (EP14-QM32).
2. Connect a hose to the drain valve (QM1) and open the valve. Some liquid will run out.
3. Air must enter the system to allow the remaining liquid to run out. To let in air, loosen the connection slightly at the shut-off valve (EP14-QM32) that joins the heat pump with the cooling module.

When the climate system is empty, the required service can be carried out and/or any components can be replaced.

Draining the climate system in the heat pump

If S1256 requires servicing, drain the climate system as follows:

1. Close the shut-off valves outside the heat pump for the climate system (return and supply line).
2. Connect a hose to the drain valve (QM1) and open the valve. Some liquid will run out.
3. Air must enter the system to allow the remaining liquid to run out. To let in air, loosen the connection slightly at the shut-off valve that joins the climate system and the heat pump by the connection (XL2).

When the climate system is empty, the required service can be carried out.

Draining the entire climate system

If the entire climate system requires draining, do this as follows:

1. Connect a hose to the drain valve (QM1) and open the valve. Some liquid will run out.
2. Air must get into the system for the remaining liquid to run out. To allow air in, unscrew the bleed screw on the highest radiator in the house.

When the climate system is empty, the required service can be carried out.

EMPTYING THE BRINE SYSTEM

In order to service the brine system it may be easier to drain the system first. This can be done in different ways depending on what needs doing:

Draining the brine system in the cooling module

If, for example, the brine pump requires replacing or the cooling module requires servicing, drain the brine system by:

1. Close the shut-off valves to brine system (EP14-QM33) and (EP14-QM34).
2. Connect a hose to the drain valve (QM2), place the other opening of the hose in a vessel and open the valve. A small amount of brine will flow into the vessel.
3. Air must get into the system in order for the remaining brine to run out. To let in air, slacken off the connection slightly at the shut-off valve (EP14-QM33) that joins the heat pump with the cooling module.

When the brine system is empty, the required service can be carried out.

Draining the brine system in the heat pump

If the heat pump requires servicing, drain the brine system by:

1. Close the shut-off valve outside the heat pump for the brine system.
2. Connect a hose to the drain valve (QM2), place the other opening of the hose in a vessel and open the valve. A small amount of brine will flow into the vessel.
3. Air must enter the system to allow the remaining brine to run out. To let in air, loosen the connection slightly at the shut-off valve that joins the brine side with the heat pump by the connection (XL7).

When the brine system is empty, the required service can be carried out.

HELPING THE CIRCULATION PUMP TO START

The circulation pump in S1256 has an automatic start help function. If necessary the pump can be started manually. In such cases, take the following action:

1. Shut off S1256.
2. Remove the front cover
3. Press in the screw for start help using a screwdriver as illustrated.
4. With the screw pressed in, turn the screwdriver in any direction.
5. Start S1256 and check that the circulation pump is working.

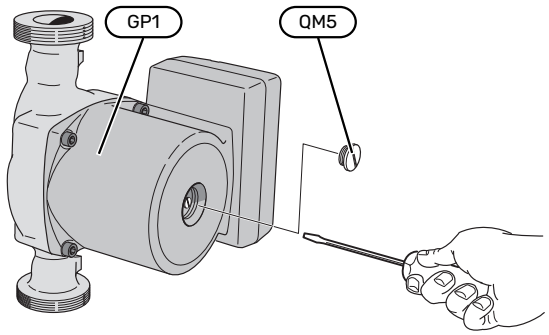

The image shows an example of what a circulation pump can look like.

TEMPERATURE SENSOR DATA

Temperature (°C)	Resistance (kOhm)	Voltage (VDC)
-10	56.20	3.047
0	33.02	2.889
10	20.02	2.673
20	12.51	2.399
30	8.045	2.083
40	5.306	1.752
50	3.583	1.426
60	2.467	1.136
70	1.739	0.891
80	1.246	0.691

PULLING OUT THE COOLING MODULE

The cooling module can be pulled out for service and transport. The images show examples of what a cooling module might look like.

NOTE

Switch off the heat pump and cut the power with the safety switch.

Caution

Remove the front cover according to the description on page 8.

1. Close the shut-off valves (EP14-QM31), (EP14-QM32), (EP14-QM33) and (EP14-QM34).

   Drain the compressor module according to the instructions on page 62

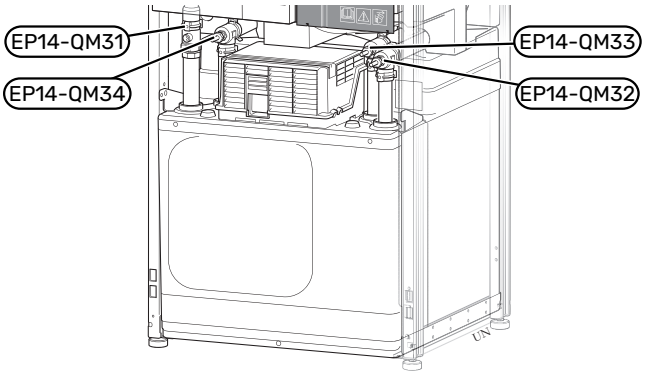

2. Remove the insulation.
3. Remove the locking plate.
4. Disconnect the pipe connection under the shut-off valve (EP14-QM31).

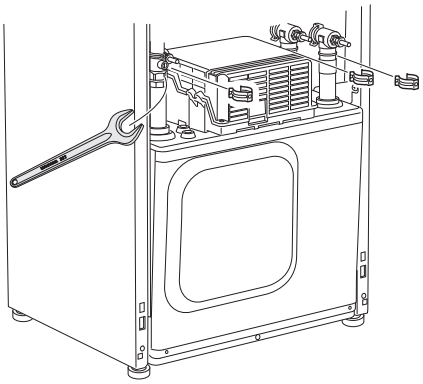

5. Remove the two screws.

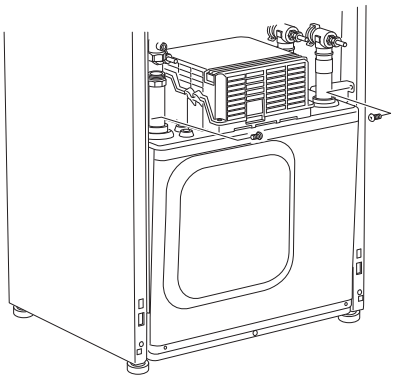

6. Disconnect the connectors (XF2), (XF11) and (XF22).
7. Carefully pull out the cooling module.

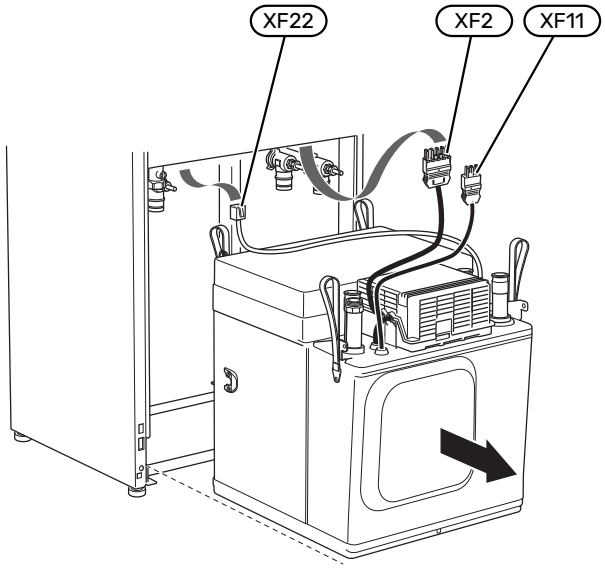

TIP

The cooling module is installed in reverse order.

NOTE

During reassembly, the enclosed O-rings should replace the existing ones on the shut-off valves (EP14-QM32), (EP14-QM33) and (EP14-QM34).

USB SERVICE OUTLET

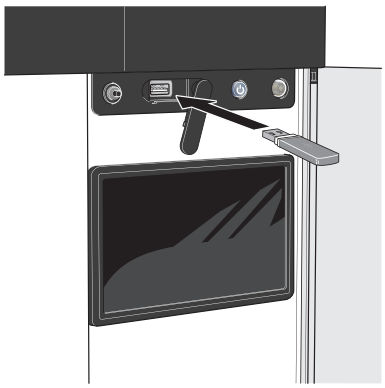

When a USB memory is connected, a new menu (menu 8) appears in the display.

Menu 8.1 - "Update the software"

You can update the software with a USB memory in menu 8.1 - "Update the software".

NOTE

In order to update using a USB memory, the memory must contain a file with software for S1256 from NIBE.

Software for S1256 can be downloaded from https://myuplink.com.

One or more files are shown in the display. Select a file and press "OK".

TIP

A software update does not reset the menu settings in S1256.

Caution

If the update is interrupted before it is complete (e.g. during a power cut), the software is automatically restored to the previous version.

Menu 8.2 - Logging

Interval
Setting range: 1 s – 60 min

Here you can choose how current measurement values from S1256 should be saved onto a log file on the USB memory.

1. Set the desired interval between loggings.
2. Select “Start logging".
3. The relevant measurement values from S1256 are now saved in a file on the USB memory at the set interval until you select "Stop logging".

> **Caution**
>
> Select "Stop logging" before removing the USB memory.

Logging floor drying

Here you can save a floor drying log on the USB memory and in this way see when the concrete slab reached the correct temperature.

- Make sure that "Underfloor drying function" is activated in menu 7.5.2.
- A log file is now created, where the temperature and the immersion heater output can be read off. Logging continues until "Underfloor drying function" is stopped.

> **Caution**
>
> Close "Underfloor drying function" before removing the USB memory.

Menu 8.3 - Manage settings

Save settings
Alternative: on/off

Display backup
Alternative: on/off

Restore settings
Alternative: on/off

In this menu, you save/upload menu settings to/from a USB memory stick.

Save settings: Here, you save menu settings in order to restore them later or to copy the settings to another S1256.

Display backup: Here, you save both menu settings and measurement values, e.g. energy data.

> **Caution**
>
> When you save menu settings to the USB memory, you replace any previously saved settings on the USB memory.

Restore settings: Here, you upload all menu settings from the USB memory stick.

> **Caution**
>
> Resetting of menu settings from the USB memory cannot be undone.

Manual restoring of software

If you want to restore the software to the previous version:

1. Switch off S1256 via the shutdown menu. The status lamp goes out, off/on button light up blue.
2. Press the on/off button once.
3. When the on/off button changes colour from blue to white, press and hold the on/off button.
4. When the status lamp changes to green, release the on/off button.

> **Caution**
>
> If the status lamp should turn yellow at any time, S1256 has ended up in emergency mode and the software has not been restored.

> **TIP**
>
> If you have a previous version of the software on your USB memory, you can install that instead of manually restoring the version.

Menu 8.5 - Export energy logs

From this menu, you can save your energy logs to a USB memory.

MODBUS TCP/IP

S1256 has built-in support for Modbus TCP/IP, which is activated in menu 7.5.9 - "Modbus TCP/IP".

TCP/IP settings are set in menu 5.2 - "Network settings".

Modbus protocol uses port 502 for communication.

Readable	ID	Description
Read	0x04	Input Register
Read writable	0x03	Holding Register
Writable multiple	0x10	Write multiple registers
Writable single	0x06	Write single register

Available registers are shown in the display for the currect product and its installed and activated accessories.

Export register

1. Insert a USB memory.
2. Go to menu 7.5.9 and choose "Export most used registers"or"Export all registers". These will then be stored on the USB memory in CSV format. (These options is only shown when a USB memory in inserted in the display).

Disturbances in comfort

In most cases, S1256 notes a malfunction (a malfunction can lead to disruption in comfort) and indicates this with alarms, and instructions for action, in the display.

Info-menu

All the heat pump's measurement values are gathered under menu 3.1 - "Operating info" in the heat pump's menu system. Examining the values in this menu can often make it easier to identify the source of the fault.

Manage alarm

In the event of an alarm, a malfunction has occurred and the status lamp shines with a steady red light. You receive information about the alarm in the smartguide on the display.

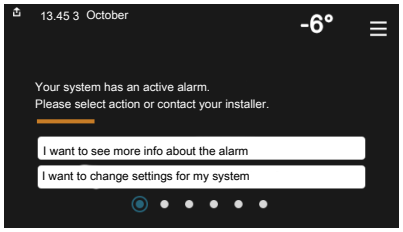

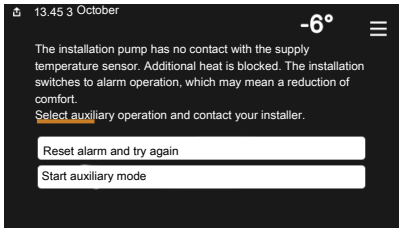

ALARM

In the event of an alarm with a red status lamp, a malfunction has occurred that S1256 cannot remedy itself. On the display, you can see what type of alarm it is and reset it.

In many cases, it is sufficient to select "Reset alarm and try again" for the installation to revert to normal operation.

If a white light comes on after selecting "Reset alarm and try again", the alarm has been remedied.

"Auxiliary operation" is a type of emergency mode. This means that the installation tries to produce heat and/or hot water, even though there is some kind of problem. This could mean that the compressor is not in operation. In this case, any electric additional heating produces heat and/or hot water.

Caution

To select "Auxiliary operation", an alarm action must be selected in menu 7.1.8.1 - "Alarm actions".

Caution

Selecting "Auxiliary operation" is not the same as correcting the problem that caused the alarm. The status lamp will therefore remain red.

Troubleshooting

If the operational interference is not shown in the display the following tips can be used:

BASIC ACTIONS

Start by checking the following items:

- Group and main fuses of the accommodation.
- The property's earth circuit breaker.
- Miniature circuit breaker for S1256 (FC1).
- Temperature limiter for S1256 (FQ10).
- Correctly set load monitor.

LOW HOT WATER TEMPERATURE OR A LACK OF HOT WATER

- Closed or throttled externally mounted filling valve for the hot water.
  - Open the valve.
- Mixing valve (if there is one installed) set too low.
  - Adjust the mixer valve.
- S1256 in incorrect operating mode.
  - Enter menu 4.1 - "Operating mode". If "Auto" mode is selected, select a higher value for "Stop additional heat" in menu 7.1.10.2 - "Auto mode setting".
  - If mode "Manual" is selected, select "Additional heat".
- Large hot water consumption.
  - Wait until the hot water has heated up. Temporarily increased hot water capacity can be activated in the "Hot water" home screen, in menu 2.1 - "More hot water" or via myUplink.
- Too low hot water setting.
  - Enter menu 2.2 - "Hot water demand" and select a higher demand mode.
- Low hot water access with the "Smart Control" function active.
  - If the hot water usage has been low for an extended period of time, less hot water than normal will be produced. Activate "More hot water" via the "Hot water" home screen, in menu 2.1 - "More hot water" or via myUplink.
- Too low or no operating prioritisation of hot water.
  - Enter menu 7.1.10.1 - "Operating prioritisation" and increase the time for when hot water is to be prioritised. Note that, if the time for hot water is increased, the time for heating production is reduced, which can give lower/uneven room temperatures.

- "Holiday" activated in menu 6.
  - Enter menu 6 and deactivate.

LOW ROOM TEMPERATURE

- Closed thermostats in several rooms.
  - Set the thermostats to max in as many rooms as possible. Adjust the room temperature via the "Heating" home screen, rather than turning down the thermostats.
- S1256 in incorrect operating mode.
  - Enter menu 4.1 - "Operating mode". If "Auto" mode is selected, select a higher value for "Stop heating" in menu 7.1.10.2 - "Auto mode setting".
  - If mode "Manual" is selected, select "Heating". If this is not enough, also select "Additional heat".
- Too low set value on the automatic heating control.
  - Adjust via the smart guide or home screen "Heating"
  - If the room temperature is only low in cold weather, the curve slope in menu 1.30.1 - "Curve, heating" may need to be adjusted upwards.
- Too low or no operating prioritisation of heat.
  - Enter menu 7.1.10.1 - "Operating prioritisation" and increase the time for when heating is to be prioritised. Note that if the time for heating is increased, the time for hot water production is reduced, which can give a smaller amount of hot water.
- "Holiday" activated in menu 6 - "Scheduling".
  - Enter menu 6 and deactivate.
- External switch for changing room temperature activated.
  - Check any external switches.
- Air in the climate system.
  - Vent the climate system.
- Closed valves (QM31), (QM32) to the climate system.
  - Open the valves.

HIGH ROOM TEMPERATURE

- Too high set value on the automatic heating control.
  - Adjust via the smart guide or home screen "Heating"
  - If the room temperature is only high in cold weather, the curve slope in menu 1.30.1 - "Curve, heating" may need to be adjusted downwards.
- External switch for changing room temperature activated.
  - Check any external switches.

UNEVEN ROOM TEMPERATURE.

- Incorrectly set heating curve.
  - Fine-tune the heating curve in menu 1.30.1.
- Too high set value on "dT at DOT"..
  - Go to menu 7.1.6.2 (flow set. climate system) and reduce the value of "DOT".
- Uneven flow over the radiators.
  - Adjust the flow distribution between the radiators.

LOW SYSTEM PRESSURE

- Not enough water in the climate system.
  - Fill the climate system with water and check for leaks (see chapter "Filling and venting").

THE COMPRESSOR DOES NOT START

- There is no heating or hot water demand, nor cooling demand (accessory is required for cooling).
  - S1256 does not call on heating, hot water or cooling.
- Compressor blocked due to the temperature conditions.
  - Wait until the temperature is within the product's working range.
- Minimum time between compressor starts has not been reached.
  - Wait for at least 30 minutes and then check if the compressor has started.
- Alarm tripped.
  - Follow the display instructions.

WHINING NOISE IN THE RADIATORS

- Closed thermostats in the rooms and incorrectly set heating curve.
  - Set the thermostats to max in as many rooms as possible. Fine-tune the heating curve via home screen heating, rather than choking the thermostats.
- Circulation pump speed set too high.
  - Go to menu 7.1.2.2 (Pump speed heating medium GP1) and reduce the speed of the circulation pump.
- Uneven flow over the radiators.
  - Adjust the flow distribution between the radiators.

Accessories

Detailed information about the accessories and complete accessories list available at nibe.co.uk.

Not all accessories are available on all markets.

ACTIVE/PASSIVE COOLING IN 4-PIPE SYSTEM ACS 45

Part no 067 195

ACTIVE/PASSIVE COOLING HPAC S40

The accessory HPAC S40 is a climate exchange module that is to be included in a system with S1256.

Part no. 067 624

DOCKING KIT PVT 40

PVT 40 enables S1256 to use PVT-panels as brine-source.

Part no. 057 245

EXTERNAL ELECTRIC ADDITIONAL HEAT ELK

These accessories require accessories card AXC 40 (step controlled addition).

ELK 5
Electric heater
5 kW, 1 x 230 V
Part no. 069 025

ELK 8
Electric heater
8 kW, 1 x 230 V
Part no. 069 026

ELK 15
15 kW, 3 x 400 V
Part no. 069 022

ELK 213
7–13 kW, 3 x 400 V
Part no. 069 500

EXTRA SHUNT GROUP ECS

This accessory is used when S1256 is installed in houses with two or more different heating systems that require different supply temperatures.

ECS 40 (Max 80 m²)
Part no 067 287

ECS 41 (approx. 80-250 m²)
Part no 067 288

FREE COOLING PCS 44

This accessory is used when S1256 is installed in an installation with passive cooling.

Part no 067 296

HUMIDITY SENSOR HTS 40

This accessory is used to show and regulate humidity and temperatures during both heating and cooling operation.

Part no. 067 538

EXHAUST AIR MODULE FLM S45

FLM S45 is an exhaust air module designed to combine recovery of mechanical exhaust air with ground source heating.

FLM S45
Part no. 067 627

Bracket BAU 40
Part no. 067 666

HRV UNIT ERS

This accessory is used to supply the accommodation with energy that has been recovered from the ventilation air. The unit ventilates the house and heats the supply air as necessary.

ERS S10-400[1]
Part no. 066 163

ERS 20-250[1]
Part no. 066 068

ERS 30-400[1]
Part no. 066 165

[1] A preheater may be required.

BASE EXTENSION EF 45

This accessory can be used to create a larger area under S1256.

Part no. 067 152

AUXILIARY RELAY HR 10

Auxiliary relay HR 10 is used to control external 1 to 3 phase loads such as oil burners, immersion heaters and pumps.

Part no 067 309

COMMUNICATION MODULE FOR SOLAR ELECTRICITY EME 20

EME 20 is used to enable communication and control between inverters for solar cells from NIBE and S1256.

Part no. 057 215

PASSIVE COOLING PCM S40/S42

PCM S40/42 makes it possible to obtain passive cooling from rock, groundwater or surface soil collectors.

Part no. 067 625 / 067 626

POOL HEATING POOL 40

POOL 40 is used to enable pool heating with S1256.

Part no 067 062

FILLING VALVE KIT, BRINE 25/32

Valve kit for filling brine in the collector hose. Includes particle filter and insulation.

KB 25 (max 13 kW)
Part no. 089 368

KB 32 (max. 30 kW)
Part no. 089 971

ROOM UNIT RMU S40

The room unit is an accessory with a built-in room sensor, which allows the control and monitoring of S1256 to be carried out in a different part of your home to where it is located.

Part no. 067 650

SOLAR PACKAGE NIBE PV

NIBE PV is a modular system comprising solar panels, assembly parts and inverters, which is used to produce your own electricity.

ACCESSORY CARD AXC 40

This accessory is used to enable connection and control of shunt controlled additional heat, step controlled additional heat, external circulation pump or ground water pump.

Part no. 067 060

WIRELESS ACCESSORIES

It is possible to connect wireless accessories to S1256, e.g. room, humidity, CO_2 sensors.

For more information, as well as a complete list of all available wireless accessories, see myuplink.com.

TOP CABINET TOC 30

Top cabinet, which conceals any pipes/ventilation ducts.

Height 245 mm

Part no. 067 517

Height 345 mm

Part no. 067 518

Height 385-635 mm

Part no. 067 519

Technical data

Dimensions

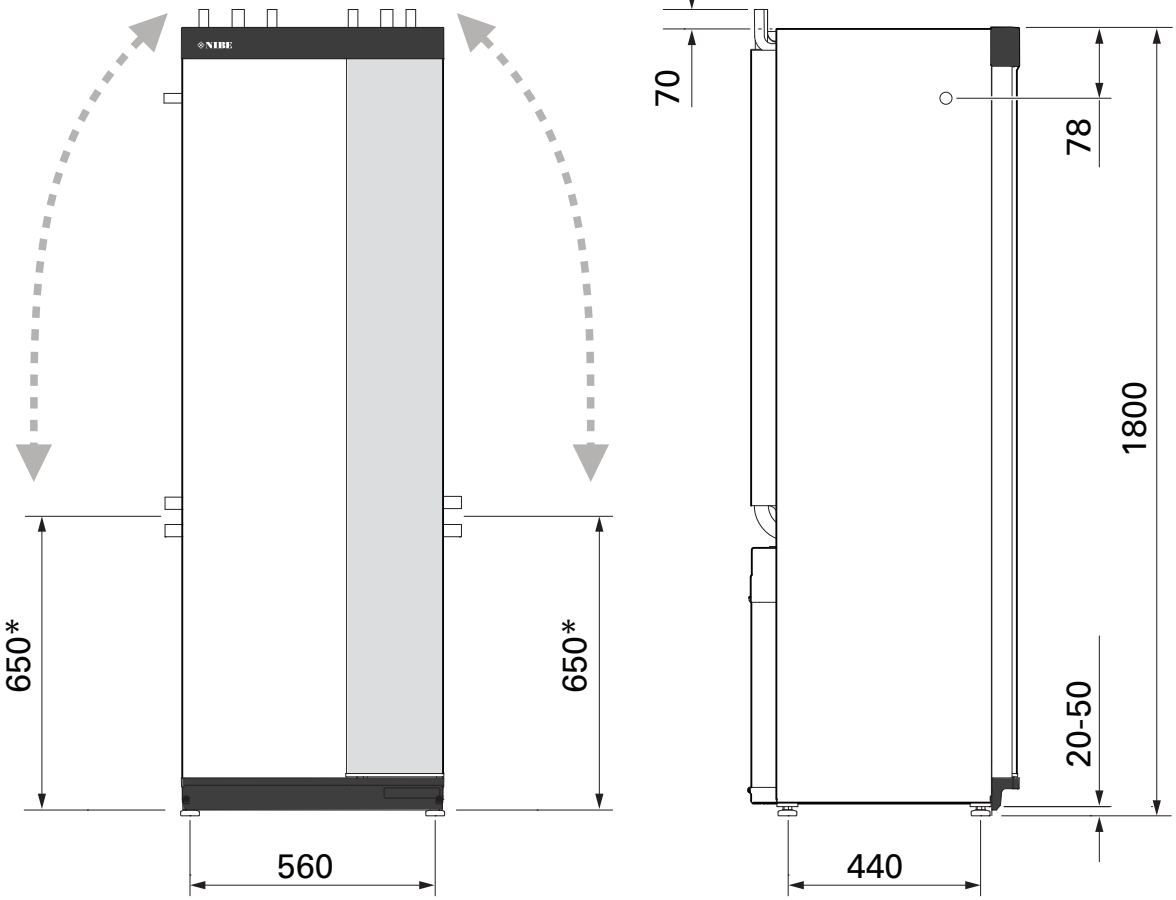

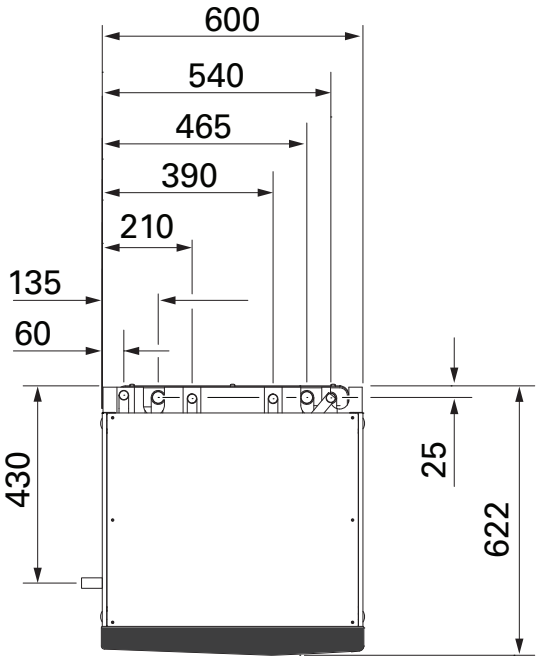

* This dimension applies at 90° angle on the brine pipes (side connection). The dimension can vary approx. ±100 mm vertically as the brine pipes consist in part of flexible pipes.

Electrical data

1X230 V

S1256-8		
Rated voltage		230V ~ 50Hz
Max operating current including 0 kW immersion heater (Recommended fuse rating).	A_{rms}	14(16)
Max operating current including 0.5 kW immersion heater (Recommended fuse rating).	A_{rms}	16(16)
Max operating current including 1.5 kW immersion heater (Recommended fuse rating).	A_{rms}	20(20)
Max operating current including 2.5 kW immersion heater (Recommended fuse rating).	A_{rms}	24(25)
Max operating current including 4 kW immersion heater (Recommended fuse rating).	A_{rms}	31(32)
Max operating current including 4.5 kW immersion heater (Recommended fuse rating).	A_{rms}	33(40)
Additional power	kW	0.5/1/1.5/2/2.5/3 /3.5/4/4.5

S1256-13		
Rated voltage		230 V ~ 50 Hz
Max operating current including 0 kW immersion heater (Recommended fuse rating).	A_{rms}	22(25)
Max operating current including 1 kW immersion heater (Recommended fuse rating).	A_{rms}	26(32)
Max operating current including 2 kW immersion heater (Recommended fuse rating).	A_{rms}	30(32)
Max operating current including 4 kW immersion heater (Recommended fuse rating).	A_{rms}	39(40)
Max operating current including 6 kW immersion heater (Recommended fuse rating).	A_{rms}	48(50)
Max operating current including 7 kW immersion heater (Recommended fuse rating).	A_{rms}	52(63)
Additional power	kW	1/2/3/4/5/6/7

Technical specifications

Model		S1256-8	S1256-13
Output data according to EN 14511			
Heating capacity (P_H)	**kW**	**1.5 – 8**	**3 – 13**
0/35 nominal			
Heating capacity (P_H)	kW	2.85	5.12
Supplied power (P_E)	kW	0.56	1.01
COP		5.05	5.06
0/45 nominal			
Heating capacity (P_H)	kW	2.62	4.81
Supplied power (P_E)	kW	0.69	1.26
COP		3.80	3.81
10/35 nominal			
Heating capacity (P_H)	kW	3.84	7.07
Supplied power (P_E)	kW	0.54	0.96
COP		7.05	7.38
10/45 nominal			
Heating capacity (P_H)	kW	3.57	6.58
Supplied power (P_E)	kW	0.71	1.27
COP		5.07	5.18
SCOP according to EN 14825			
Rated heating output ($P_{designh}$)	kW	7.5	11.0
SCOP cold climate, 35 °C / 55 °C		5.95 / 4.44	6.13 / 4.46
SCOP average climate, 35 °C / 55 °C		5.67 / 4.26	5.88 / 4.29
Energy rating, average climate			
The product's room heating efficiency class 35 °C / 55 °C [1]		A+++ / A+++	A+++ / A+++
The system's room heating efficiency class 35 °C / 55 °C [2]		A+++ / A+++	A+++ / A+++
Efficiency class hot water heating / declared tap profile [3]		A+ / XL	A+ / XL
Noise			
Sound power level (L_{WA})$_{EN\ 12102}$ at 0/35	dB(A)	38 – 43	36 – 47
Sound pressure level (L_{PA}) calculated values according to EN ISO 11203 at 0/35 and 1m range	dB(A)	21 – 28	21 – 32
Electrical data			
Output, Brine pump	W	3 - 137	2 - 180
Output, Heating medium pump	W	2 – 63	2 – 63
Enclosure class		IPx1B	
Equipment Compliant with IEC 61000-3-12			
For Connection Design Purposes, Compliant with Class A limits of IEC 61000-3-2			
For Connection Design Purposes, Compliant with IEC 61000-3-3 technical requirements			
WLAN			
2.412 - 2.484 GHz max power	dbm	15	
Wireless units			
2.405 - 2.480 GHz max power	dbm	5	
Refrigerant circuit			
Type of refrigerant		R454B	
GWP refrigerant		466	
Fill amount	kg	1.15	1.45
CO_2 equivalent	ton	0.54	0.68
Cut-out value pressure switch HP / LP	MPa (bar)	4.2 (42) / 0.3 (3)	
Brine circuit			
Min/max system pressure brine	MPa (bar)	0.05 (0.5) / 0.45 (4.5)	
Flow at Pdesignh [4] [5]	l/s	0.43	0.67
Max external available pressure at Pdesignh [5]	kPa	63	48

Model		S1256-8	S1256-13
Min/Max incoming Brine temp	°C	see diagram	
Min. outgoing brine temp.	°C	-12	
Heating medium circuit			
Min/Max system pressure heating medium	MPa (bar)	0.05 (0.5) / 0.45 (4.5)	
Flow at Pdesignh [5] [6]	l/s	0.18	0.27
Max external available pressure at Pdesignh [5]	kPa	71	72
Operating pressure	MPa (bar)	0.3 (3)	
Max temperature, supply line (factory setting)	°C	70	
Min/max HM-temp	°C	see diagram	
Pipe connections			
Brine ext diam. CU pipe	mm	28	28
Heating medium ext diam. CU pipes	mm	22	28
Hot water connection external diam	mm	22	
Cold water connection external diam	mm	22	
Hot water and heating section			
Volume coil	l	7.8	
Volume water heater	l	173	
Max pressure in water heater	MPa (bar)	0.6 (6 bar)	
Capacity, hot water heating according to EN16147			
Tap volume 40°C in comfort mode Small, Medium, Large	l	235 / 250 / 275	235 / 250 / 275
COP_{DHW} (tap profile XL) comfort mode Small		3.0	3.0
Compressor oil			
Oil type		POE	
Oil volume	l	0.45	0.90
Dimensions and weight			
Width x Depth x Height	mm	600 x 620 x 1,800	
Ceiling height [7]	mm	1,970	
Net weight	kg	211	217
Mass unit, filled with water	kg	359	389
Weight only cooling module	kg	83	93.5
Part number, 1x230 V		065 894	065 715

1 Scale for the product's efficiency class room heating: A+++ to D.

2 Scale for the system's efficiency class room heating: A+++ to G. Reported efficiency for the system takes the product's temperature regulator into account.

3 Scale for efficiency class hot water: A+ to F.

4 At Delta T=3°C

5 Brine in 0°C / Water out 45°C²

6 At Delta T=10°C

7 With feet removed, the height is approx. 1,950 mm.

MISCELLANEOUS

Type		S1256-8	S1256-13
Tested according to EN 12897:2016			
Maximum water supply pressure	MPa (bar)	1.6 (16)	
Operating pressure, tap water	MPa (bar)	0.6 (6)	
Expansion vessel, tap water, precharge pressure	MPa (bar)	0.3 (3)	
Pressure reduction valve, setting	MPa (bar)	0.35 (3.5)	
Volume expansion vessel (external)	litres	18	
Opening pressure T&P-valve	MPa (bar)	0.7 (7)	
Max operating temperature T&P-valve	°C	95	
Discharge capacity of T&P-valve	kW	12	
Set opening pressure expansion relief valve	MPa (bar)	0.6 (6)	
Cut out, temperature limiter	C	89	
Reheating time S1256	min	19	
Capacity charge coil, 10 °C to 60 °C, primary flow 900 l/h	kW	29.89	
Equivalent amount of hot water (40 °C)	litres	170	
Pressure drop at 0.25 l/s	kPa	13	
Idle loss	kWh/24h	2.14	

WORKING RANGE HEAT PUMP, COMPRESSOR OPERATION

The compressor provides a supply temperature up to 65 °C at -5 °C incoming brine temperature.

The compressor's speed is limited in certain parts of the working range.

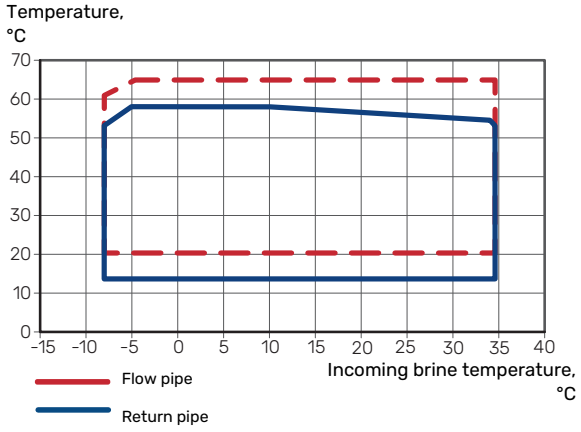

DIAGRAM, DIMENSIONING COMPRESSOR SPEED

Heating operation 35 °C and 55 °C

Diagram for dimensioning a heat pump.

S1256-8

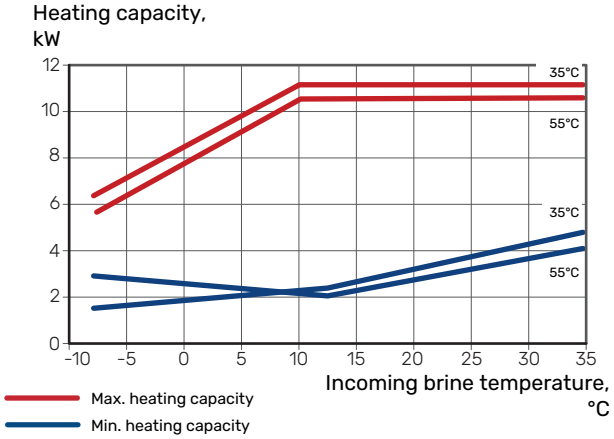

S1256-13

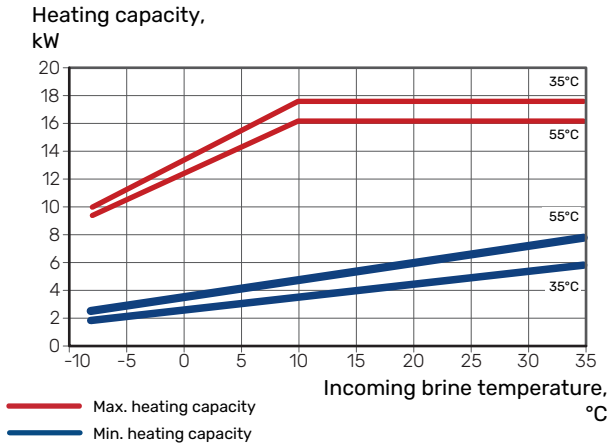

Cooling operation (accessories are required)

> **Caution**
> To dimension heating dump, see the diagram for heating operation.

Cooling capacity at supply temperature 35 °C and 55 °C

S1256-8

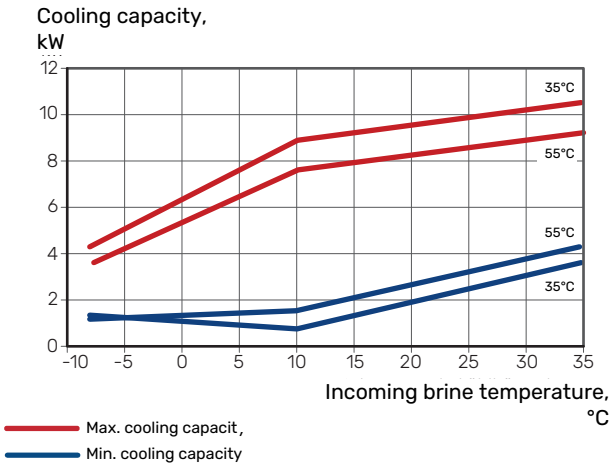

S1256-13

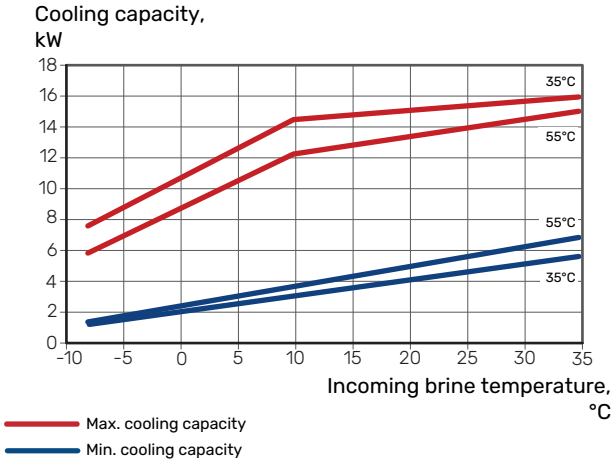

Energy labelling

INFORMATION SHEET

Supplier		NIBE AB	
Model		**S1256-8**	**S1256-13**
Temperature application	°C	35 / 55	35 / 55
Declared load profile for water heating		XL	XL
Seasonal space heating energy efficiency class, average climate		A+++ / A+++	A+++ / A+++
Water heating energy efficiency class, average climate		A+	A+
Rated heat output ($P_{designh}$), average climate	kW	7.5	11.0
Annual energy consumption space heating, average climate	kWh	2,732 / 3,637	3,868 / 5,303
Annual energy consumption water heating, average climate	kWh	1,331	1,325
Seasonal space heating energy efficiency, average climate	%	219 / 162	227 / 163
Water heating energy efficiency, average climate	%	126	126
Sound power level L_{WA} indoors	dB	36	39
Rated heat output ($P_{designh}$), cold climate	kW	7.5	11.0
Rated heat output ($P_{designh}$), warm climate	kW	7.5	11.0
Annual energy consumption space heating, cold climate	kWh	3,107 / 4,167	4,423 / 6,081
Annual energy consumption water heating, cold climate	kWh	1,331	1,325
Annual energy consumption space heating, warm climate	kWh	1,765 / 2,346	2,512 / 3,413
Annual energy consumption water heating, warm climate	kWh	1,331	1,325
Seasonal space heating energy efficiency, cold climate	%	230 / 169	237 / 170
Water heating energy efficiency, cold climate	%	126	126
Seasonal space heating energy efficiency, warm climate	%	219 / 163	226 / 164
Water heating energy efficiency, warm climate	%	126	126
Sound power level L_{WA} outdoors	dB	-	-

DATA FOR ENERGY EFFICIENCY OF THE PACKAGE

Model		S1256-8	S1256-13
Temperature application	°C	35 / 55	35 / 55
Controller, class		VI	
Controller, contribution to efficiency	%	4	
Seasonal space heating energy efficiency of the package, average climate	%	223 / 166	231 / 167
Seasonal space heating energy efficiency class of the package, average climate		**A+++**	**A+++**
Seasonal space heating energy efficiency of the package, cold climate	%	234 / 173	241 / 174
Seasonal space heating energy efficiency of the package, warm climate	%	223 / 167	230 / 168

The reported efficiency of the package also takes the controller into account. If an external supplementary boiler or solar heating is added to the package, the overall efficiency of the package should be recalculated.

TECHNICAL DOCUMENTATION

Model		S1256-8					
Type of heat pump		☐ Air-water ☐ Exhaust-water ☒ Brine-water ☐ Water-water					
Low-temperature heat pump		☐ Yes ☒ No					
Integrated immersion heater for additional heat		☒ Yes ☐ No					
Heat pump combination heater		☒ Yes ☐ No					
Climate		☒ Average ☐ Cold ☐ Warm					
Temperature application		☒ Medium (55°C) ☐ Low (35°C)					
Applied standards		EN-14825, EN-16147 & EN-12102-1					
Rated heat output	Prated	7,5	kW	*Seasonal space heating energy efficiency*	η_s	162	%
Declared capacity for space heating at part load and at outdoor temperature Tj				*Declared coefficient of performance for space heating at part load and at outdoor temperature Tj*			
Tj = -7 °C	Pdh	6.6	kW	Tj = -7 °C	COPd	3.25	-
Tj = +2 °C	Pdh	4.0	kW	Tj = +2 °C	COPd	4.26	-
Tj = +7 °C	Pdh	2.6	kW	Tj = +7 °C	COPd	5.02	-
Tj = +12 °C	Pdh	1.8	kW	Tj = +12 °C	COPd	5.40	-
Tj = biv	Pdh	7.5	kW	Tj = biv	COPd	3.03	-
Tj = TOL	Pdh	7.5	kW	Tj = TOL	COPd	3.03	-
Tj = -15 °C (if TOL < -20 °C)	Pdh		kW	Tj = -15 °C (if TOL < -20 °C)	COPd		-
Bivalent temperature	T_{biv}	-10	°C	Min. outdoor air temperature	TOL	-10	°C
Cycling interval capacity	Pcych		kW	Cycling interval efficiency	COPcyc		-
Degradation coefficient	Cdh	0.99	-	Max supply temperature	WTOL	65	°C
Power consumption in modes other than active mode				*Additional heat*			
Off mode	P_{OFF}	0.003	kW	Rated heat output	Psup	0.0	kW
Thermostat-off mode	P_{TO}	0.003	kW				
Standby mode	P_{SB}	0.008	kW	Type of energy input	Electric		
Crankcase heater mode	P_{CK}	0.010	kW				
Other items							
Capacity control	Variable			Rated airflow (air-water)			m³/h
Sound power level, indoors/outdoors	L_{WA}	38 / -	dB	Nominal heating medium flow			m³/h
Annual energy consumption	Q_{HE}	3,637	kWh	Brine flow brine-water or water-water heat pumps		1.68	m³/h
For heat pump combination heater							
Declared load profile for water heating	XL			*Water heating energy efficiency*	η_{wh}	126	%
Daily energy consumption	Q_{elec}	6.329	kWh	Daily fuel consumption	Q_{fuel}		kWh
Annual energy consumption	AEC	1,331	kWh	Annual fuel consumption	AFC		GJ
Contact information	*NIBE Energy Systems – Box 14 – Hannabadsvägen 5 – 285 21 Markaryd – Sweden*						

Model		S1256-13					
Type of heat pump		☐ Air-water ☐ Exhaust-water ☒ Brine-water ☐ Water-water					
Low-temperature heat pump		☐ Yes ☒ No					
Integrated immersion heater for additional heat		☒ Yes ☐ No					
Heat pump combination heater		☒ Yes ☐ No					
Climate		☒ Average ☐ Cold ☐ Warm					
Temperature application		☒ Medium (55°C) ☐ Low (35°C)					
Applied standards		EN-14825, EN-16147 & EN-12102-1					
Rated heat output	Prated	11,0	kW	*Seasonal space heating energy efficiency*	η_s	163	%
Declared capacity for space heating at part load and at outdoor temperature Tj				*Declared coefficient of performance for space heating at part load and at outdoor temperature Tj*			
Tj = -7 °C	Pdh	9.7	kW	Tj = -7 °C	COPd	3.34	-
Tj = +2 °C	Pdh	6.0	kW	Tj = +2 °C	COPd	4.24	-
Tj = +7 °C	Pdh	3.8	kW	Tj = +7 °C	COPd	5.01	-
Tj = +12 °C	Pdh	2.5	kW	Tj = +12 °C	COPd	5.33	-
Tj = biv	Pdh	11.0	kW	Tj = biv	COPd	3.09	-
Tj = TOL	Pdh	11.0	kW	Tj = TOL	COPd	3.09	-
Tj = -15 °C (if TOL < -20 °C)	Pdh		kW	Tj = -15 °C (if TOL < -20 °C)	COPd		-
Bivalent temperature	T_{biv}	-10	°C	Min. outdoor air temperature	TOL	-10	°C
Cycling interval capacity	Pcych		kW	Cycling interval efficiency	COPcyc		-
Degradation coefficient	Cdh	0.99	-	Max supply temperature	WTOL	65	°C
Power consumption in modes other than active mode				*Additional heat*			
Off mode	P_{OFF}	0.004	kW	Rated heat output	Psup	0.0	kW
Thermostat-off mode	P_{TO}	0.007	kW				
Standby mode	P_{SB}	0.010	kW	Type of energy input	Electric		
Crankcase heater mode	P_{CK}	0.008	kW				
Other items							
Capacity control	Variable			Rated airflow (air-water)			m³/h
Sound power level, indoors/outdoors	L_{WA}	39 / -	dB	Nominal heating medium flow			m³/h
Annual energy consumption	Q_{HE}	5,303	kWh	Brine flow brine-water or water-water heat pumps		2.20	m³/h
For heat pump combination heater							
Declared load profile for water heating	XL			*Water heating energy efficiency*	η_{wh}	126	%
Daily energy consumption	Q_{elec}	6.294	kWh	Daily fuel consumption	Q_{fuel}		kWh
Annual energy consumption	AEC	1,325	kWh	Annual fuel consumption	AFC		GJ
Contact information	*NIBE Energy Systems – Box 14 – Hannabadsvägen 5 – 285 21 Markaryd – Sweden*						

Item register

A

Accessories, 69
Alarm, 67
Areas with hard water, 15
Assembly, 7

B

Brine side, 17
Buffer vessel UKV, 19

C

Cleaning the climate system, 15
Cleaning the water heater, 62
Climate system, 18
Climate systems and zones, 40
  Control - Introduction, 40
Cold and hot water, 18
  Connecting cold and hot water, 18
Commissioning and adjusting, 29
  Filling and venting, 29
  Preparations, 29
  Start guide, 30
Commissioning and adjustment
  Setting pump speeds, 31
Connecting accessories, 25
Connecting external operating voltage for the control system, 23
Connecting hot water circulation, 19
Connecting sensors, 24
Connecting the climate system, 18
Connections, 23
Control, 37
  Control - Introduction, 37
Control - Introduction, 37
Control - Menus
  Menu 1 - Indoor climate, 41
  Menu 2 - Hot water, 44
  Menu 3 - Info, 46
  Menu 4 - My system, 47
  Menu 5 - Connection, 51
  Menu 6 - Scheduling, 52
  Menu 7 - Service, 53
Cooling module, 12
Country specific information, 5

D

Data for energy efficiency of the system, 78
Delivery and handling, 7
  Assembly, 7
  Drawing out the cooling module, 7
  Installation area, 7
  Removing parts of the insulation, 10
  Removing the covers, 8
  Supplied components, 8
  Transport, 7
Diagram, dimensioning compressor speed, 75
Dimensions, 71
Dimensions and pipe connections, 16
Disruption to comfort
  Info menu, 67
Disturbances in comfort, 67
  Alarm, 67
  Manage alarm, 67
  Troubleshooting, 67
Docking alternatives
  Free cooling, 20
  Ground water system, 19
  Pool, 20
  Two or more climate systems, 20
  Ventilation recovery, 19
Draining the climate system, 62
Draining the hot water heater, 62
Drawing out the cooling module, 7, 64

E

Electrical addition - maximum output, 28
  Power steps of the immersion heater, 28
Electrical cabinets, 12
Electrical connection, 21
  General, 21
Electrical connections
  Connecting accessories, 25
  Connecting external operating voltage for the control system, 23
  Connecting sensors, 24
  Connections, 23
  Electrical addition - maximum output, 28
  External connection options, 26
  External connections, 24
  External energy meter, 24
  Load monitor, 25
  Multi-installation, 25
  Outdoor sensor, 24
  Power connection, 23
  Room sensor, 24
  Settings, 28
  Tariff control, 23
  Temperature sensor, external flow line, 24
Emptying the brine system, 63
Energy labelling, 77
  Data for energy efficiency of the package, 78
  Information sheet, 77
  Technical documentation, 79
External connection options, 26
  Possible selection for AUX inputs, 26
  Possible selection for AUX output (potential free variable relay), 27
External connections, 24
External energy meter, 24

F

Filling and venting, 29
  Filling and venting the brine system, 29
  Filling the hot water heater, 29
Filling and venting the brine system, 29
Filling the hot water heater, 29

H

Helping the circulation pump to start, 64
Help menu, 38

I

Important information, 4
  Country specific information, 5
  Marking, 4
Info menu, 67
Information sheet, 77
Inspection of the installation, 6

Installation alternative
Buffer vessel UKV, 19
Connecting hot water circulation, 19
Water heater with immersion heater, 18
Installation area, 7

M

Manage alarm, 67
Marking, 4
Menu 1 - Indoor climate, 41
Menu 2 - Hot water, 44
Menu 3 - Info, 46
Menu 4 - My system, 47
Menu 5 - Connection, 51
Menu 6 - Scheduling, 52
Menu 7 - Service, 53
Modbus TCP/IP, 66
Multi-installation, 25

N

Navigation
Help menu, 38

O

Outdoor sensor, 24

P

Pipe and ventilation connections
Climate system, 18
Connecting the climate system, 18
Pipe connections, 14
Brine side, 17
Cold and hot water
Connecting cold and hot water, 18
Dimensions and pipe connections, 16
General, 14
Areas with hard water, 15
Cleaning the climate system, 15
Pipe dimensions, 16
Symbol key, 15
System diagram, 16
Pipe dimensions, 16
Possible selection for AUX inputs, 26
Possible selection for AUX output (potential free variable relay), 27
Post adjustment and bleeding, 31
Pump adjustment, automatic operation, 31
Pump adjustment, manual operation, 31
Pump capacity diagram, brine side, manual operation, 31
Power connection, 23
Preparations, 29
Pump adjustment, automatic operation, 31
Brine side, 31
Climate system, 31
Pump adjustment, manual operation, 31
Climate system, 32
Pump capacity diagram, brine side, manual operation, 31

R

Removing the covers, 8
Room sensor, 24

S

Safety information
Inspection of the installation, 6
Marking, 4
Serial number, 4
Symbols, 4
Warranty information, 5
Serial number, 4
Service, 61
Service actions
Cleaning the water heater, 62
Draining the climate system, 62
Draining the hot water heater, 62
Drawing out the cooling module, 64
Emptying the brine system, 63
Helping the circulation pump to start, 64
Modbus TCP/IP, 66
Temperature sensor data, 64
USB service outlet, 65
Settings, 28
Emergency mode, 28
Standby mode, 28
Start guide, 30
Supplied components, 8
Symbol key, 15
Symbols, 4
System diagram, 16

T

Tariff control, 23
Technical data, 71
Dimensions, 71
Energy labelling, 77
Data for energy efficiency of the system, 78
Information sheet, 77
Technical documentation, 79
Technical Data, 73
Technical Data, 73
Diagram, dimensioning compressor speed, 75
Working range heat pump, 75
Technical documentation, 79
Temperature sensor, external flow line, 24
Temperature sensor data, 64
The heat pump's design
Component list, cooling module, 12
Component location, cooling module, 12
The heat pump design, 11
Component list electrical cabinets, 12
Component location electrical cabinets, 12
Component locations, 11
List of components, 11
Topping up the climate system, 29
Transport, 7
Troubleshooting, 67

U

USB service outlet, 65

V

Venting the brine system, 30
Venting the climate system, 29

W

Warranty information, 5
Working range heat pump, 75

GROUND SOURCE HEAT PUMP COMMISSIONING CHECKLIST

This Commissioning Checklist is to be completed in full by the competent person who commissioned the heat pump and associated equipment as a means of demonstrating compliance with the appropriate Building Regulations and then handed to the customer to keep for future reference.
Failure to install and commission this equipment to the manufacturer's instructions may invalidate the warranty but does not affect statutory rights

Customer Name

Address

Telephone Number

Heat Pump Make and Model

Heat Pump Serial Number

Commissioned by *(print name)*

Certified Operative Reg. No. [1]

Company Name & Address

Commissioning Date

Telephone No.

Building Regulations Notification Number *(if applicable)* [2]

CONTROLS - SYSTEM AND HEAT PUMP *Tick the appropriate boxes if applicable*

1. Time & Temperature Control to Heating	Room Thermostat & Programmer/Timer	☐	Programmable Roomstat	☐	Load/Weather Compensation	☐	Optimum Start Control ☐
2. Time & Temperature Control to Hot Water					Cylinder Thermostat & Programmer/Timer	☐	Combined with Heat pump main controls ☐
3. Heating Zone Valves (including underfloor loops)					Fitted	☐	Not Required ☐
4. Hot Water Zone Valves					Fitted	☐	Not Required ☐
5. Thermostatic Radiator Valves					Fitted	☐	Not Required ☐
6. Heat Pump Safety Interlock [3]					Built In	☐	Provided ☐
7. Outdoor Sensor					Fitted	☐	Not Required ☐
8. Automatic Bypass System					Fitted	☐	Not Required ☐
9. Buffer Vessel Fitted					Yes ☐	No ☐	If YES, Volume ☐ Litres

ALL SYSTEMS

The heating system has been filled and pressure tested	Yes ☐
Expansion vessel for heating is sized, fitted & charged in accordance with manufacturer's instructions	Yes ☐
The heat pump is fitted on a solid/stable surface capable of taking its weight	Yes ☐
The system has been flushed and cleaned in accordance with BS7593 and heat pump manufacturer's instructions	Yes ☐
What system cleaner was used?	
What inhibitor was used?	Qty ☐ litres
Are all exposed external pipeworks insulated?	Yes ☐

BORE HOLE/GROUND LOOPS

☐ Bore Hole ☐ Ground Loop — Length/Depth ☐ m

The ground loops/bore hole pipes have been filled and pressure tested in accordance with relevant British Standards	Yes ☐
If more than one 1 collector has been used has the system been hydraulically balanced (Flow balancing/regulating valves fitted & adjusted)?	Yes ☐
Has the system been vented/de-aired?	Yes ☐
Are system filters fitted & clean?	Yes ☐
Is the system topped up to the correct level?	Yes ☐
Was the system cleaned & flushed prior to use?	Yes ☐
Are isolating valves in their correct position	Yes ☐
What system cleaner was used?	Qty ☐ litres
What antifreeze was used?	Qty ☐ litres
What temperature will the antifreeze protect to?	☐ °C
What inhibitor was used (if not included in Antifreeze)?	Qty ☐ litres
Record incoming collector fluid temperature	☐ °C
Record outgoing collector fluid temperature	☐ °C

CENTRAL HEATING MODE *Measure and Record*

Heating Flow Temperature ☐ °C Heating Return Temperature ☐ °C

DOMESTIC HOT WATER MODE *Measure and Record*

Is the heat pump connected to a hot water cylinder? ☐ Unvented ☐ Vented ☐ Thermal Store ☐ Not Connected

Hot water has been checked at all outlets ☐ Yes Have Thermostatic Blending Valves been fitted? ☐ Yes ☐ Not required

ADDITIONAL SYSTEM INFORMATON

Additional heat sources connected: ☐ Gas Boiler ☐ Oil Boiler ☐ Electric Heater ☐ Solar Thermal Other _____

ALL INSTALLATIONS

The heating, hot water and ventilation systems complies with the appropriate Building Regulations	Yes ☐
All electrical work complies with the appropriate Regulations	Yes ☐
The heat pump and associated products have been installed and commissioned in accordance with the manufacturer's instructions	Yes ☐
The operation of the heat pump and system controls have been demonstrated to the customer	Yes ☐
The manufacturer's literature, including Benchmark Checklist and Service Record, has been explained and left with the customer	Yes ☐

Commissioning Engineer's Signature

Customer's Signature

(To confirm demonstration of equipment and receipt of appliance instructions)

benchmark COLLECTIVE MARK
THE MARK OF QUALITY FOR THE INSTALLATION, COMMISSIONING AND SERVICING OF DOMESTIC HEATING AND HOT WATER SYSTEMS

www.centralheating.co.uk

Notes: [1] Installers should be members of an appropriate Competent Persons Scheme. [2] All installations in England and Wales must be notified to Local Area Building Control (LABC) either directly or through a Competent Persons Scheme. A Building Regulations Compliance Certificate will then be issued to the customer. [3] May be required for systems covered by G3 Regulations

© Heating and Hotwater Industry Council (HHIC)

MAINS PRESSURE HOT WATER STORAGE SYSTEM COMMISSIONING CHECKLIST

This Commissioning Checklist is to be completed in full by the competent person who commissioned the storage system as a means of demonstrating compliance with the appropriate Building Regulations and then handed to the customer to keep for future reference.

Failure to install and commission this equipment to the manufacturer's instructions may invalidate the warranty but does not affect statutory rights.

Customer Name _____ Telephone Number _____

Address _____

Cylinder Make and Model _____

Cylinder Serial Number | | |

Service Record

It is recommended that your heating system is serviced regularly and that the appropriate Service Interval Record is completed.

Service Provider
Before completing the appropriate Service Interval Record below, please ensure you have carried out the service as described in the manufacturer's instructions.

Always use the manufacturer's specified spare part when replacing controls.

Service 1 Date:
Engineer Name:
Company Name:
Telephone No.
Operative ID No.
Comments:
Signature:

Service 2 Date:
Engineer Name:
Company Name:
Telephone No.
Operative ID No.
Comments:
Signature:

Service 3 Date:
Engineer Name:
Company Name:
Telephone No.
Operative ID No.
Comments:
Signature:

Service 4 Date:
Engineer Name:
Company Name:
Telephone No.
Operative ID No.
Comments:
Signature:

Service 5 Date:
Engineer Name:
Company Name:
Telephone No.
Operative ID No.
Comments:
Signature:

Service 6 Date:
Engineer Name:
Company Name:
Telephone No.
Operative ID No.
Comments:
Signature:

Service 7 Date:
Engineer Name:
Company Name:
Telephone No.
Operative ID No.
Comments:
Signature:

Service 8 Date:
Engineer Name:
Company Name:
Telephone No.
Operative ID No.
Comments:
Signature:

Service 9 Date:
Engineer Name:
Company Name:
Telephone No.
Operative ID No.
Comments:
Signature:

Service 10 Date:
Engineer Name:
Company Name:
Telephone No.
Operative ID No.
Comments:
Signature:

NIBE Energy Systems Ltd
3C Broom Business Park,
Bridge Way, S41 9QG Chesterfield
Tel: +44 (0)330 311 2201
info@nibe.co.uk
nibe.co.uk

IHB EN 2514-1 931032

This is a publication from NIBE Energy Systems. All product illustrations, facts and data are based on the available information at the time of the publication's approval.

NIBE Energy Systems makes reservations for any factual or printing errors in this publication.

©2025 NIBE ENERGY SYSTEMS

931032