Indoor module for air to water split systems
NIBE BA-SVM 10-200

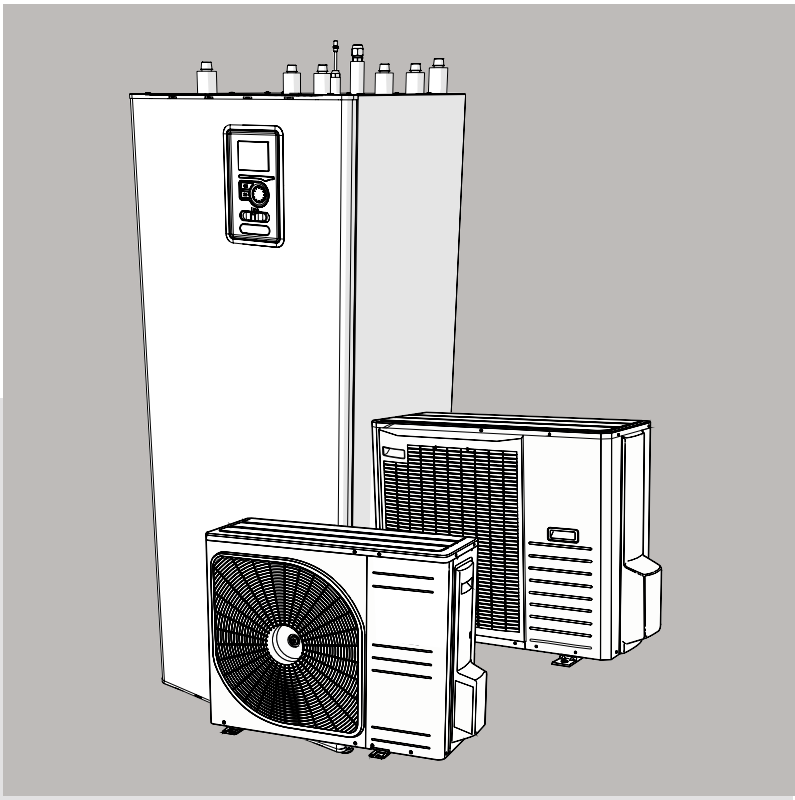

NIBE

Table of Contents

1 Important information ____ 4
Safety information ____ 4

2 Design of the indoor unit ____ 6
BA-SVM10-200 ____ 6

3 System description ____ 8
Principle of operation ____ 8

4 Description of functions ____ 12
Menu Tree ____ 12
Menu 4 - MY SYSTEM ____ 14
Menu 5 - SERVICE ____ 15
Operating status ____ 16
Heating ____ 20
Addition ____ 22

5 Current circuit ____ 40
Load monitor ____ 40

6 Component description ____ 41
Components ____ 41
Sensors ____ 45
Electronics ____ 46

7 Troubleshooting ____ 48
Alarm list ____ 48
Troubleshooting guide ____ 55
Function check, components ____ 60

8 Component replacement ____ 61
Main components ____ 62
Circuit board and electronics ____ 69

9 Technical data ____ 77
Electrical circuit diagram ____ 77
Dimensions and pipe connections ____ 86
Technical data ____ 87

10 Item Register ____ 89
Item register ____ 89

1 Important information

Safety information

This manual contains installation and service procedures for implementation by specialists.

This appliance can be used by children aged 8 years and above and persons with reduced physical, sensory or mental capacity or lack of experience and knowledge, if they will be supervised or have received instruction concerning safe use of the appliance, and if they understand the danger involved in its use. Children must not play with the appliance. Cleaning and basic maintenance of the appliance must not be carried out by children unsupervised.

The rights to make structural changes are reserved.

©NIBE 2020

Symbols

CAUTION
This symbol indicates danger to the appliance or person.

TIP
This symbol indicates tips that will make it easier to operate the product.

NOTE
This symbol indicates important information to note while operating or maintaining the appliance.

Marking

BA-SVM 10-200 is CE marked and has an IP21 protection rating.

The CE mark confirms that NIBE has ensured that the product conforms to all applicable regulations specified by the relevant EU directives. The CE mark is mandatory for most products sold in the EU, regardless of where they are made.

IP21 means that objects with a diameter greater than or equal to 12.5 mm cannot penetrate and cause damage and that the product is protected against vertically falling drops of water.

Serial number

The serial number is located at the bottom of the identification plate, on the top cover BA-SVM 10-200 and consists of 14 digits.

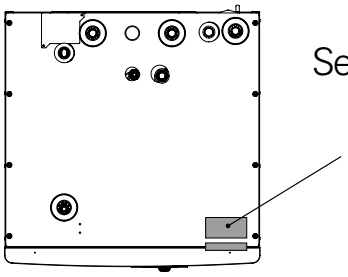

Waste disposal

Leave the disposal of the packaging to the installer who installed the product or to a special waste disposal facility.

Do not dispose of used products with normal household waste. It must be transported to a special waste disposal facility or to a vendor who provides this type of service.

Improper disposal of the product by the user may result in administrative penalties in accordance with the applicable legislation.

Inspection of the installation

The climate system must be inspected before commissioning. The inspection must be carried out by a suitably qualified person. In addition, fill in the page for the installation data in the User Manual.

2 Design of the indoor unit

BA-SVM10-200

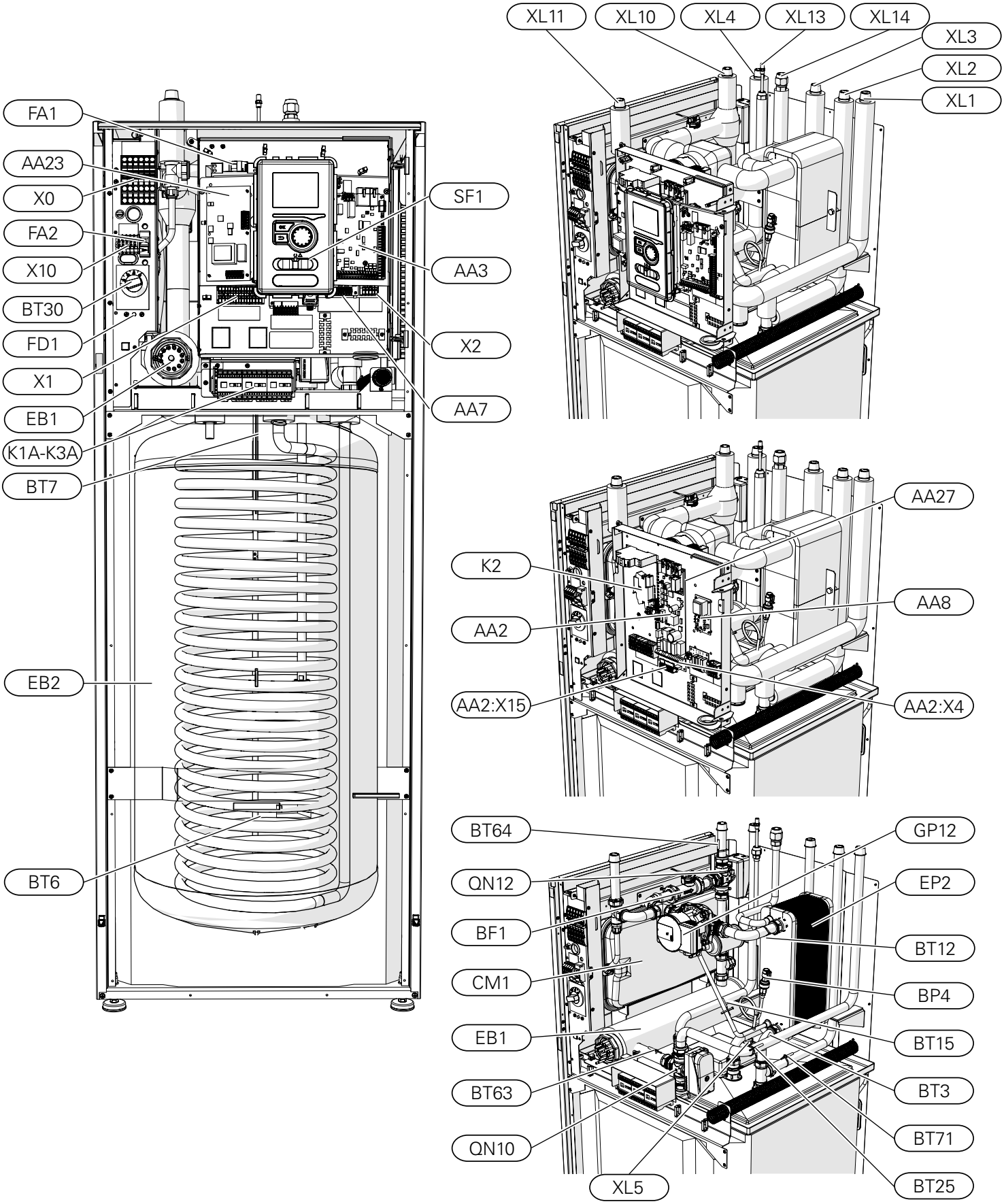

Pipe connections

XL1	Connection, heating medium, supply
XL2	Connection, heating medium, return
XL3	Connection, cold water
XL4	Connection, hot water
XL5	Connection, hot water circulation
XL10	Connection, cooling operation
XL11	Connection, safety assembly, pressure gauge, vent
XL13	Connection, liquid refrigerant
XL14	Connection, gas refrigerant

HVAC components

CM1	Expansion vessel, closed
QN10	Reversing valve, hot water/climate system
QN12	Reversing valve, heating system/cooling system
GP12	Circulation pump
EP2	Heat exchanger

Sensors

BP4	Pressure sensor, high pressure
BT3	Temp. sensor, heating medium return
BT6	Temp. sensor, hot water charging
BT7	Temp. sensor, hot water heater top
BT12	Temp. sensor, condenser out
BT15	Temp. sensor, liquid line
BT25	Temp. sensor, heating medium supply
BT63	Temp. sensor, supply heating medium behind immersion heater
BT64	Temp. sensor, cooling operation system supply
BT71	Temp. sensor, heating medium return

Electrical components

X0	Terminal block- 400V~
X1	Terminal block- 230V~
X2	Terminal block- 230V~
X10	Terminal block- 230V~
AA2:X4	Terminal block- low voltage
AA2:X15	Terminal block- low voltage
K1A-K3A	Contactor for immersion heater
K2	Alarm relay
BT30	Standby mode thermostat
AA2	Main board
AA3	Sensor board
AA23	Communication board
AA7	Relay board
AA8	Titanium anode board (Does not apply to BA-SVM 10-200 R)
AA27	Relay board
FD1	Thermal circuit breaker
FA1	Miniature circuit breaker (protecting the indoor unit)
FA2	Miniature circuit breaker (protecting the outdoor unit)
EB1	Electric additional heat

Miscellaneous

BF1	Energy meter (Does apply to BA-SVM 10-200 E EM only)
SF1	Controller switch
EB2	Hot water tank

3 System description

Principle of operation

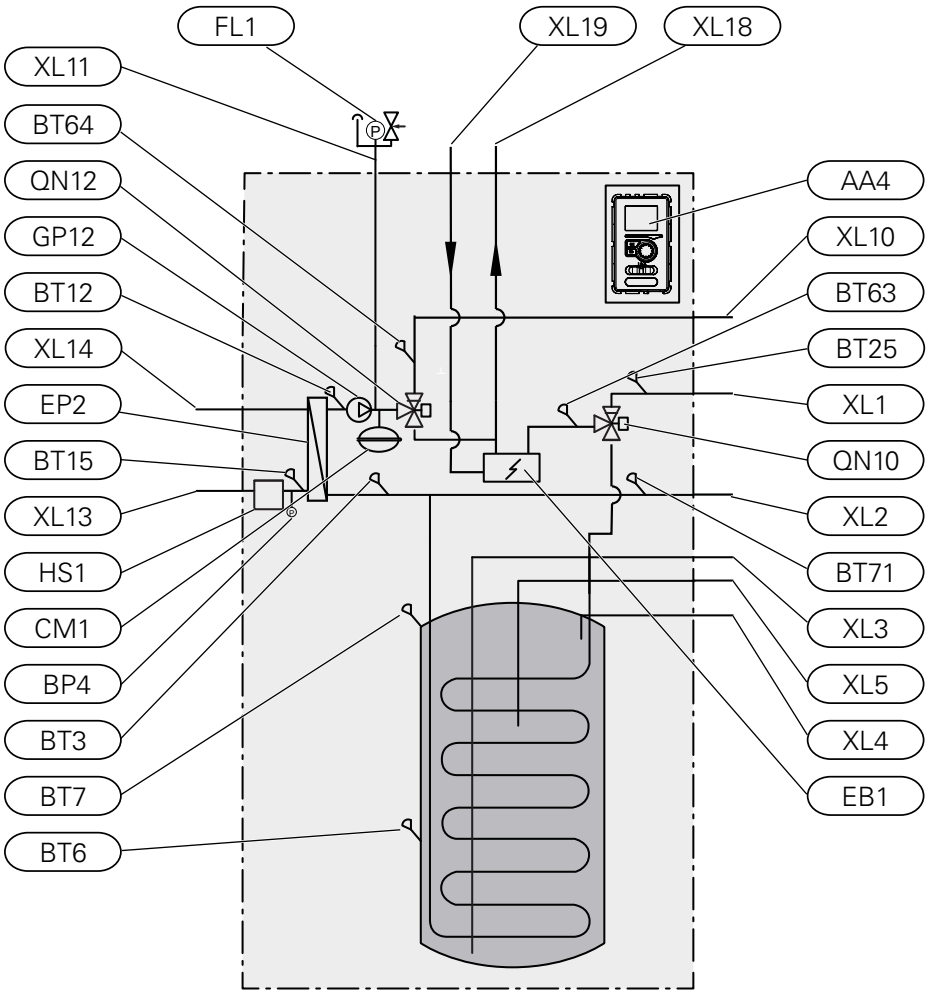

Pipe connections

XL1	Connection, heating medium, supply
XL2	Connection, heating medium, return
XL3	Connection, cold water
XL4	Connection, hot water
XL5	Connection, hot water circulation
XL10	Connection, cooling operation
XL11	Connection, safety assembly, pressure gauge
XL13	Connection, liquid refrigerant
XL14	Connection, gas refrigerant
XL 18	Connection, return to add. heat source
XL 19	Connection, supply from add. heat source
FL1	Safety group

HVAC components

CM1	Expansion vessel, closed
QN10	Reversing valve, hot water/climate system
QN12	Reversing valve, heating system/cooling system
GP12	Circulation pump
EP2	Heat exchanger
HS1	Drying filter

Sensors etc.

BP4	Pressure sensor, high pressure
BT3	Temp. sensor, heating medium return
BT6	Temp. sensor, hot water charging
BT7	Temp. sensor, hot water heater top
BT12	Temp. sensor, condenser out
BT15	Temp. sensor, liquid line
BT25	Temp. sensor, heating medium supply
BT63	Temp. sensor, supply heating medium behind immersion heater
BT64	Temp. sensor, cooling operation system supply
BT71	Temp. sensor, heating medium return
EB1	Electric additional heat
AA4	Display

KEY

- Shut-off valve
- Non-return valve
- Shunt valve
- Safety valve
- Temperature sensor
- Expansion vessel
- Pressure gauge
- Automatic air vent
- Circulation pump
- Electric heating
- Cooling system filter
- Compressor
- Plate heat exchanger
- Cooling operation
- Heating system (radiators)
- Central heating system (under floor heating systems)
- Domestic hot water
- Relief valve
- Additional heat source
- Buffer vessel
- Fan coil
- -BT64 — A dotted line indicates that you need to transfer the temperature sensor

Basic diagram

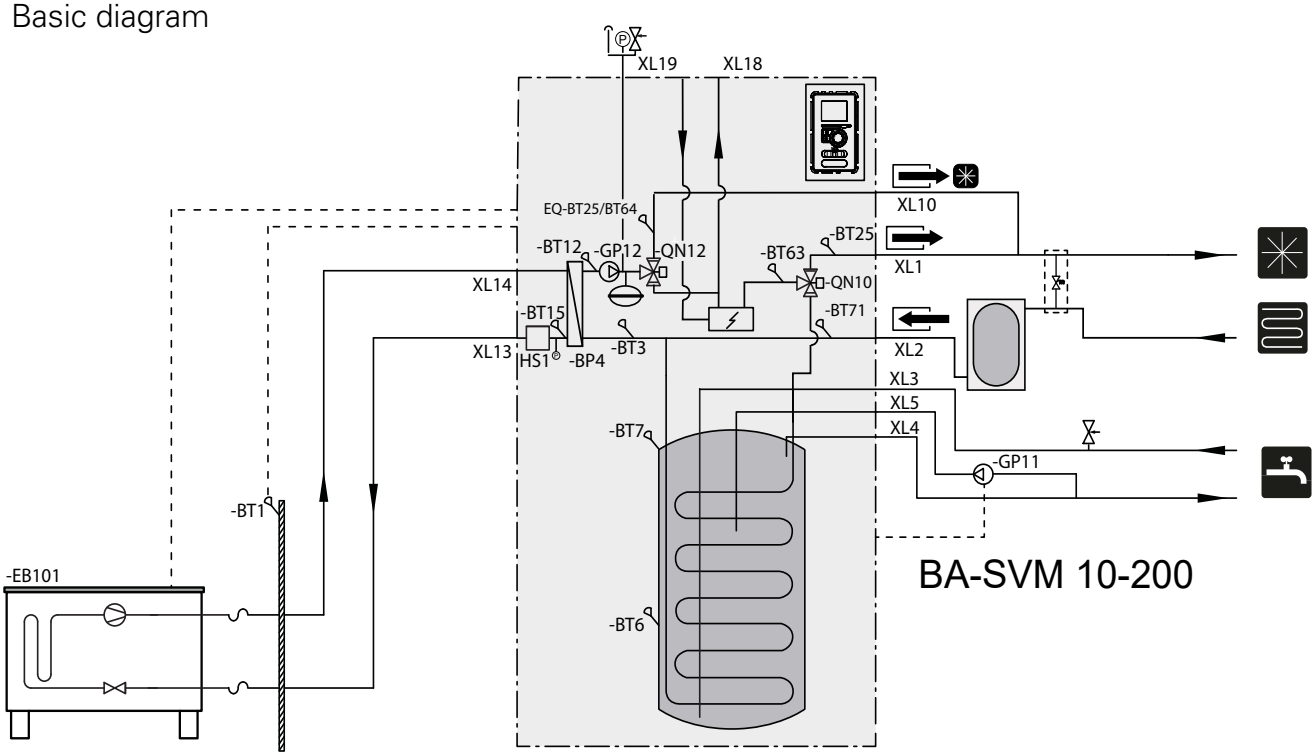

Diagram of 2-pipe cooling operation

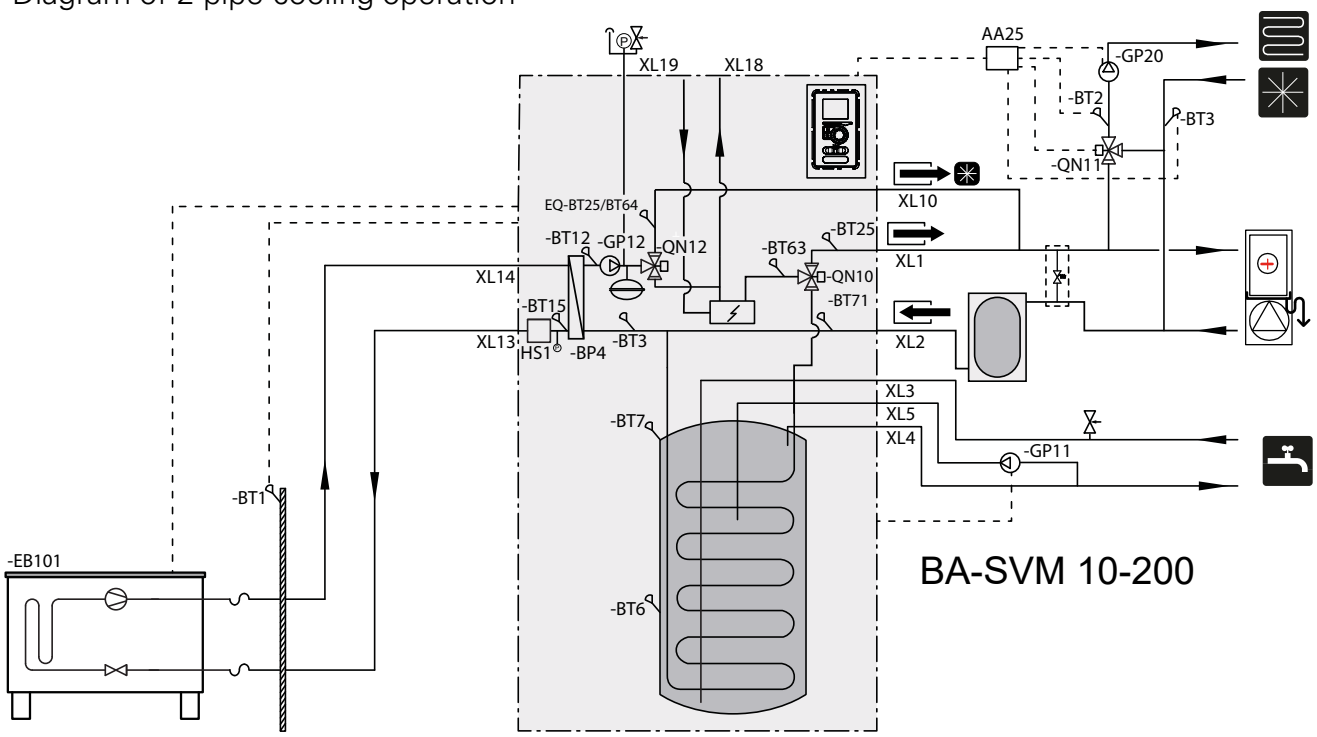

Diagram of 4-pipe cooling operation

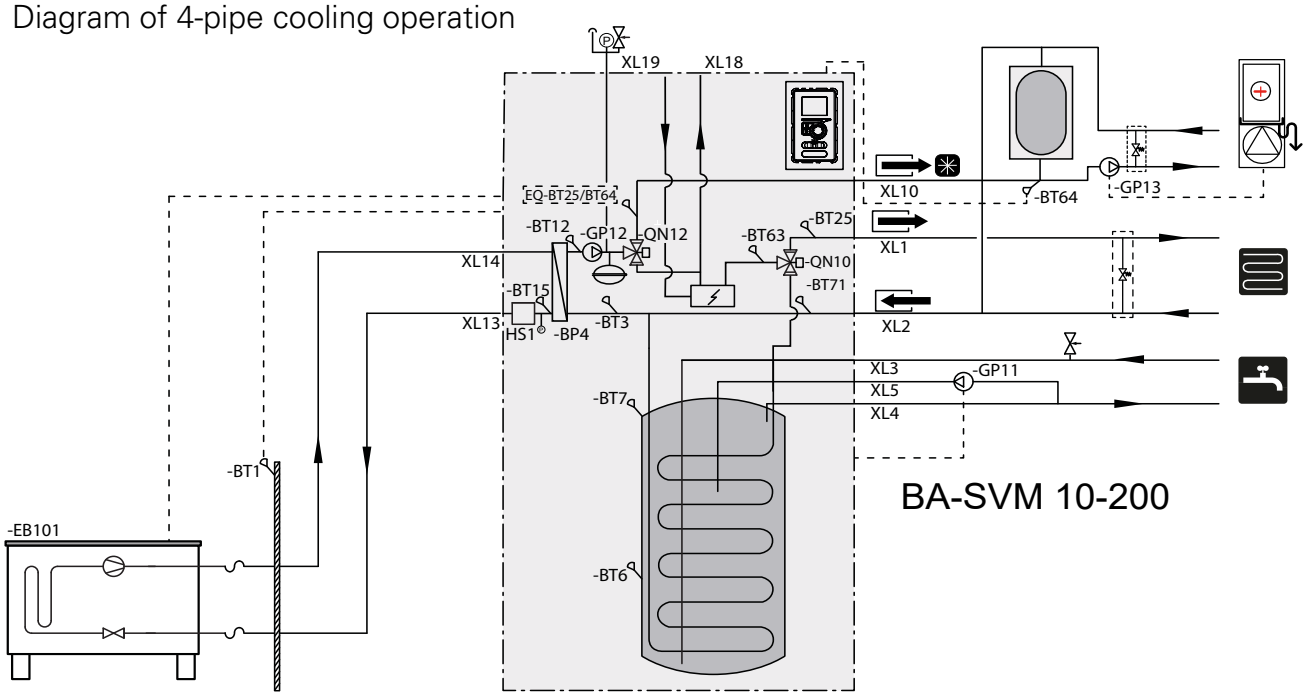

Diagram showing connection of an additional heat source

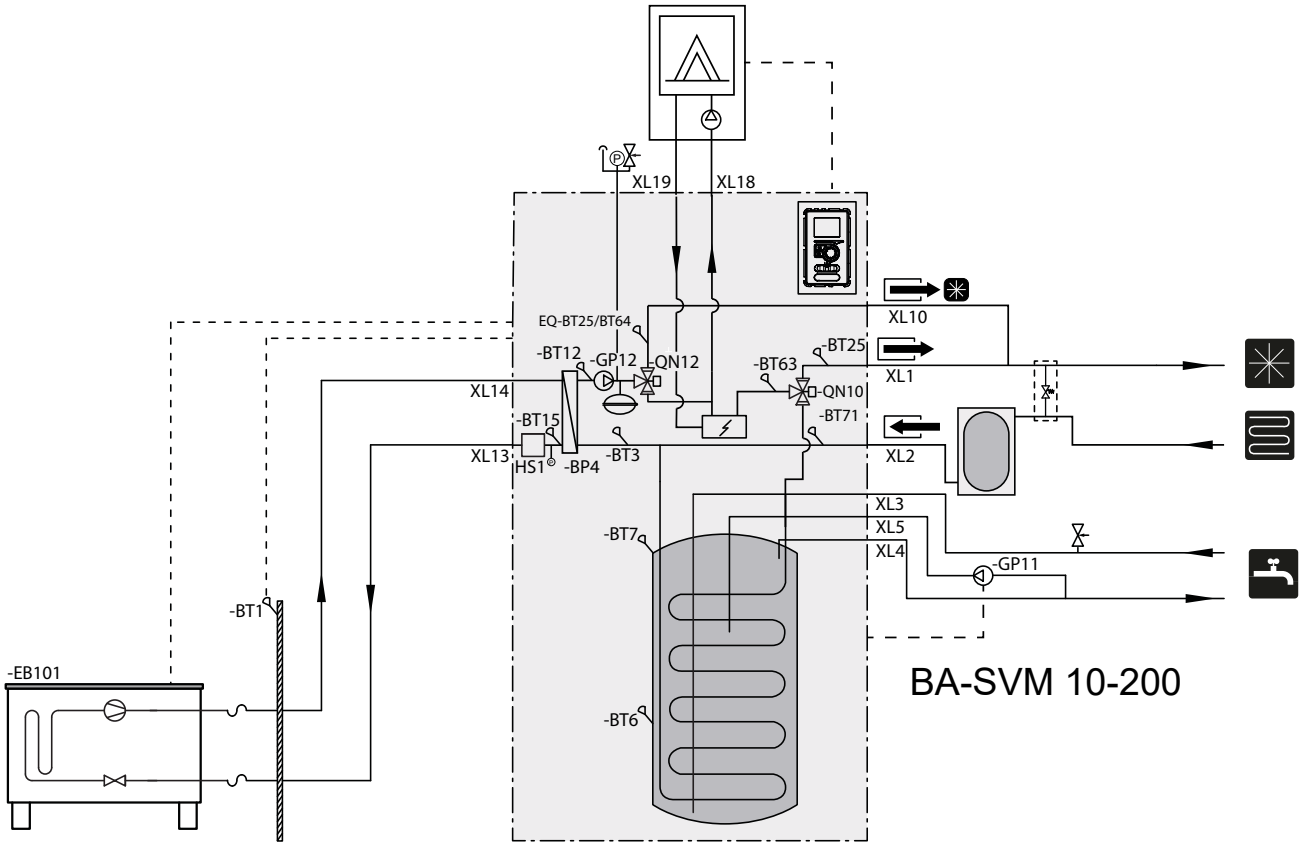

NOTE
The maximum power of the additional heat source cannot exceed 15kW.

4 Description of functions

Menu Tree

Menu 1- INDOOR CLIMATE

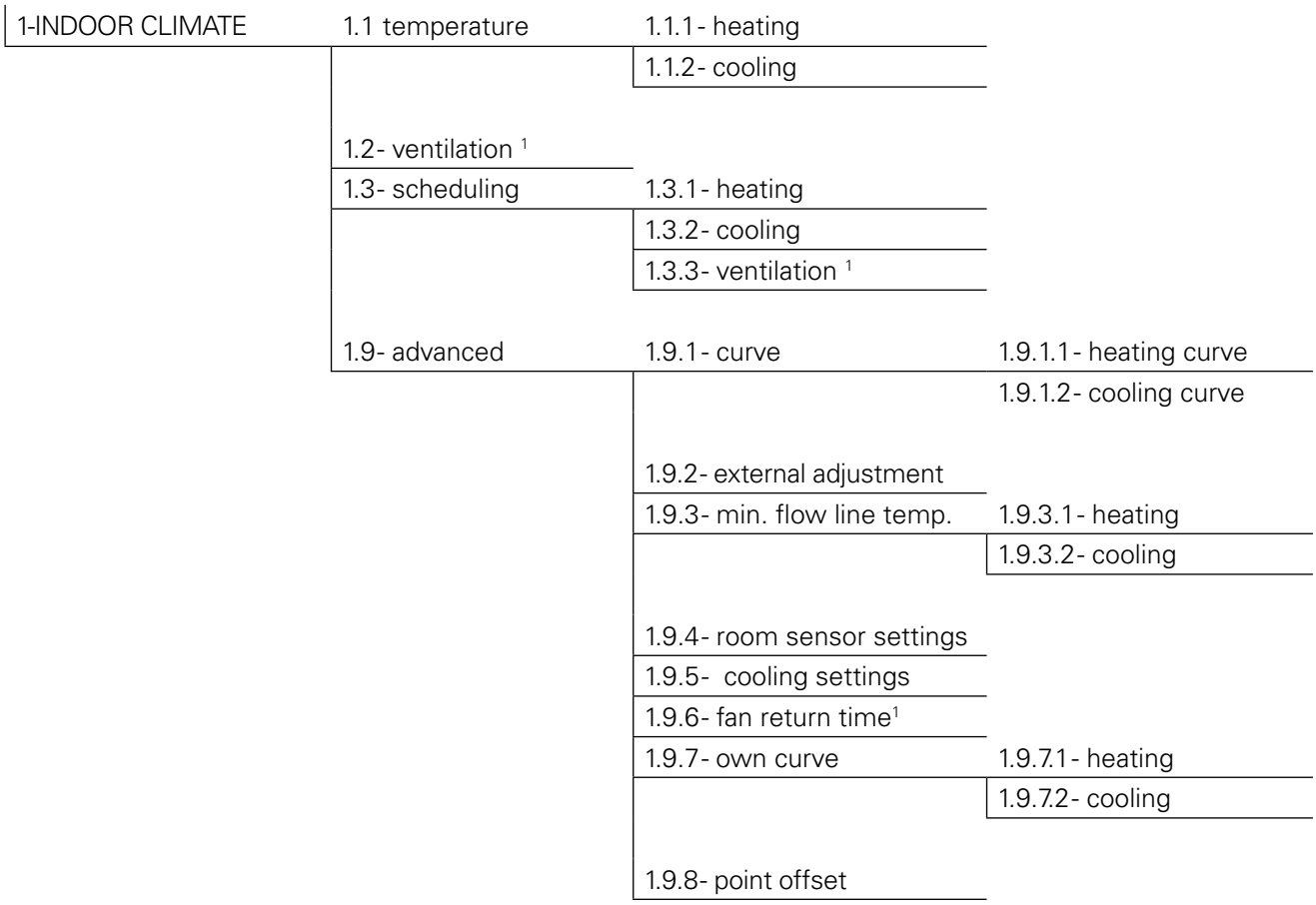

[1] The ERS additional equipment is necessary.

Menu 2- HOT WATER

2- HOT WATER	2.1- temporary lux	
	2.2- comfort mode	
	2.3- scheduling	
	2.9- advanced	2.9.1- periodic increase
		2.9.2- hot water recirc.[2]

Menu 3- INFO

3- INFO	3.1- service info
	3.2- compressor info
	3.3- add. heat info
	3.4- alarm log
	3.5- indoor temp. log

[2] The AXC 30 additional equipment is necessary.

Menu 4- MY SYSTEM

- 4- MY SYSTEM
  - 4.1- plus functions
    - 4.1.1- pool [3]
    - 4.1.2- pool 2 [3]
    - 4.1.3- internet
      - 4.1.3.1- Uplink
      - 4.1.3.8- tcp/ip settings
      - 4.1.3.9- proxy settings
    - 4.1.4- sms [4]
    - 4.1.5- SG Ready
    - 4.1.6- smart price adapt.
    - 4.1.7- smart home
    - 4.1.8- smart energy source
      - 4.1.8.1- settings
      - 4.1.8.2- set. price
      - 4.1.8.3- CO2 impact
      - 4.1.8.4- tariff periods, electricity
      - 4.1.8.6- tariff per, ext. shunt add
      - 4.1.8.7- tariff per, ext. step add
      - 4.1.8.8- tariff periods
    - 4.1.10- solar electricity [5]
  - 4.2- op. mode
  - 4.3- my icons
  - 4.4- time & date
  - 4.6- language
  - 4.7- holiday setting
  - 4.9- advanced
    - 4.9.1- op. prioritisation
    - 4.9.2- auto mode setting
    - 4.9.3- degree minute setting
    - 4.9.4- factory setting user
    - 4.9.5- schedule blocking
    - 4.9.6- schedule silent mode

[3] The POOL 40 additional equipment is necessary.
[4] The SMS 40 additional equipment is necessary.
[5] The EME 20 additional equipment is necessary.

Menu 5- SERVICE

5- SERVICE	5.1- operating settings	5.1.1- hot water settings [6]	
		5.1.2- max flow line temperature	
		5.1.3- max diff flow line temp.	
		5.1.4- alarm actions	
		5.1.5- fan sp. exhaust air [7]	
		5.1.6- fan sp. supply air [7]	
		5.1.12- addition	
		5.1.14- flow set. climate system	
		5.1.22- heat pump testing	
		5.1.23- compressor curve	
		5.1.25- time filter alarm	
	5.2- system settings	5.2.2- installed slaves	
		5.2.3- docking	
		5.2.4- accessories	
	5.3- accessory settings	5.3.2- shunt controlled add. heat	
		5.3.3- extra climate system [8]	
		5.3.4- solar heating [9]	
		5.3.6- step controlled add. heat	
		5.3.8- hot water comfort [6]	
		5.3.11- modbus [10]	
		5.3.12- exhaust/supply air module [7]	
		5.3.14- F135[11]	
		5.3.15- GBM communications module[12]	
		5.3.16- humidity sensor [13]	
		5.3.21- flow sensor / energy meter [14]	
	5.4- soft in/outputs		
	5.5- factory setting service		
	5.6- forced control		
	5.7- start guide		
	5.8- quick start		
	5.9- floor drying function		
	5.10- change log		
	5.11- slave settings	5.11.1- EB101	5.11.1.1- heat pump
			5.11.1.2- charge pump (GP12)
		5.11.2- EB102	
		5.11.3- EB103	
		5.11.4- EB104	
		5.11.5- EB105	
		5.11.6- EB106	
		5.11.7- EB107	
		5.11.8- EB108	
	5.12- country		

[6] The AXC 30 additional equipment is necessary.
[7] The ERS additional equipment is necessary.
[8] The ECS additional equipment is necessary.
[9] The SOLAR 40 additional equipment is necessary.
[10] The MODBUS 40 additional equipment is necessary.
[11] The F135 additional equipment is necessary.
[12] The OPT 10 additional equipment is necessary.
[13] The HTS 40 additional equipment is necessary.
[14] The EMK 300 additional equipment is necessary.

Operating status

General

There are three operating modes available: Auto, Manual and Add. heat only.

Operating mode (menu 4.2)	Selectable functions	Remarks
auto	auto	All operating modes permitted
manual	heating, addition, cooling	cooling only displayed if selected in menu 5.2. Cooling and heating can be selected simultaneously if: • a room sensor is installed and activated or • 4-pipe cooling system used.
add. heat only	heating	compressor blocked

If addition is blocked it is permitted when:
- hot water lux, temporary or continuous.
- periodic hot water increase.
- auxiliary operation if the compressor is blocked.
- anti-freeze.
- cooling operation.

Blocking of additional heat regards heat production but can to some degree also affect hot water production.

Hot water production can be blocked in the schedule.

In Auto operating mode the control selects the operating mode based on the following parameters. The temperatures are average temperature during the time it is selected in "filter time".

Menu	Name	Factory setting	Remarks
4.9.2	Stop addition	+5 °C	Icons in the main menu and in menu 4.2 are displayed when addition is blocked.
	Stop heating	+17 °C	Icons appear in menu 4.2 when heating is blocked.
	Filter time	24 hrs	Time for average temperature calculation

Auxiliary operation

"Auxiliary operation" is a type of emergency mode that can be selected manually when the alarm has occurred.

This means that the heat pump produces heat and/or hot water despite there being some kind of problem. This can mean that the heat pump's compressor is not running. In this case the immersion heater produces heat and/or hot water.

Status lamp lights red in the event of a deployed auxiliary operation.

Anti-freeze climate system BA-SVM 10-200

If heating is actively shut-off and it becomes colder outdoors, heating is activated to prevent the heating system from freezing.

If heating is blocked and the outdoor temperature (BT1) drops below +3°C, the anti-freeze function activates.

- Heating medium pump GP12 starts and the heating calculation with min supply line as set point value.
- Additional heat is permitted, even if another function has blocked it, but the compressor will remain blocked. The alarm and load monitor can block/restrict the additional heat however.
- There is no anti-freeze for pool.

If the anti-freeze function is active and the outdoor temperature (BT1) exceeds +3.5°C, the anti-freeze function deactivates.

Circulation pumps connected to accessory cards are active.

Anti-freezing outdoor unit

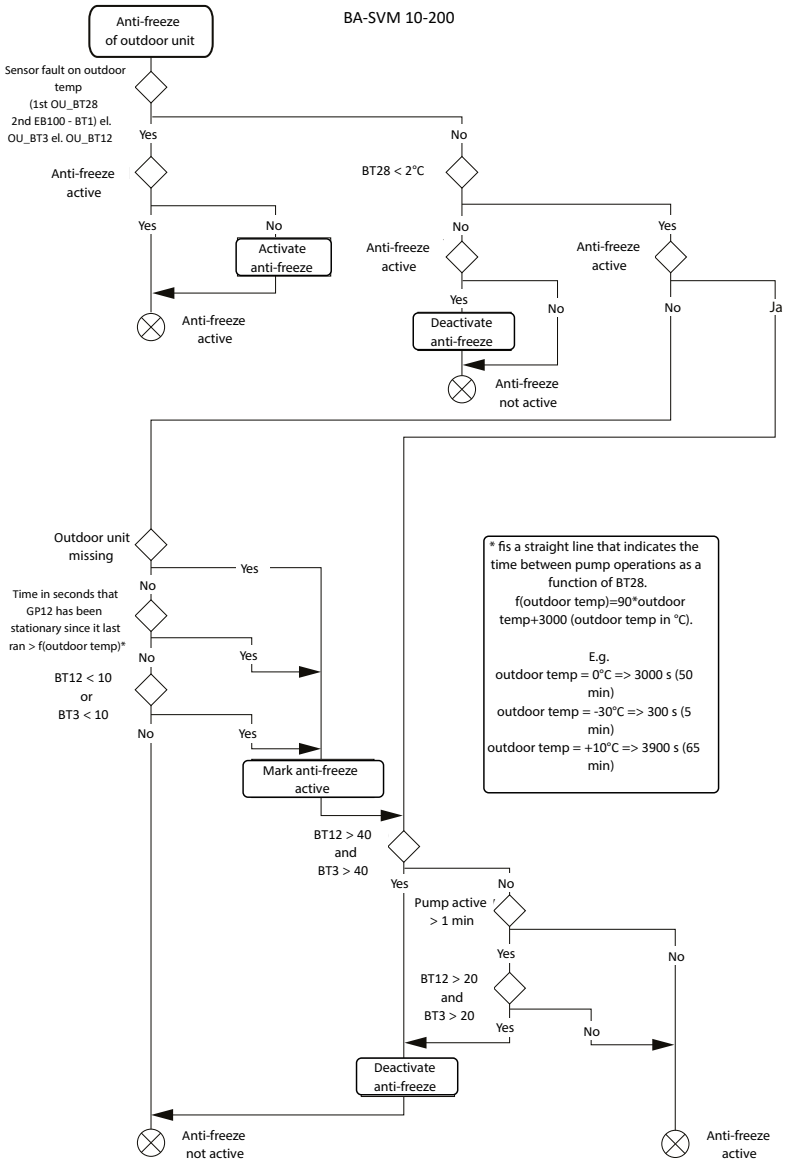

Emergency mode

Emergency mode is selected with the control switch, and is indicated by a yellow lamp.

Internal circulation pump GP12 runs at full speed and GP10 is external. Reversing valve (QN10) is open towards the heating system.

The immersion heater power is set with the dipswitch on the immersion heater card (AA1). The max flow temperature can be set to between 35 and 45°C on the emergency mode thermostat (FD1) .

External circulation pumps do not run.

Factory setting:
Immersion heater output 6 kW (Dipswitch setting, immersion heater card (AA1): 101010)
Emergency mode thermostat set to 35 °C.

Add. heat only

To run the system without heat pump connected, its pipe ends must be connected together to ensure circulation in the charge circuit. Also check that there is antifreeze.

Heat pump EB10X must be deactivated in menu 5.2.2 to prevent communication alarm.

Operating mode must be set to only additional heat.

Sensor calibration

Sensors are calibrated to increase accuracy of control and energy measurement. Calibration occurs at start-up and every 3 months. If BA-SVM 10-200 restarts calibration starts again and the correction value is = 0.

In BA-SVM 10-200, EB 101-BT3 is calibrated to EB101-BT12 and GP12 runs, gives info alarm. 354. Thereafter, with the calibrated and adjusted EB101-BT3, BT63 is adjusted, gives info alarm 355.

Calibration sequence:
- When neither compressor nor internal immersion heater work towards any demand, GP12 runs at maximum permitted speed, all reversing valves must be set to heating.
- When GP12 has run for 6 minutes and the compressor as well as the internal immersion heater have not been active, the average value of EB101-BT3 and EB101-BT12 are taken and calibrated against each other during the last minute.
- Then the two average values are compared and the two sensors (EB101-BT3 and EB101-BT12) are adjusted equally, the BT63 is adjusted according to the calibrated and adjusted EB101-BT3.
- If calibration fails 3 times, info alarm 354 and BA-SVM 10-200 cease calibration until EB101 is restarted.

Reasons to cancel or not start calibration:
- Forced control active
- Demand other than OFF on compressor
- Start guide active
- Flow guide active
- Phase detection active
- Sensor fault on supply/return sensor
- Compressor active
- Electric additional heat active
- Alarm or info alarm active
- Heating not permitted
- Cooling permitted as well as two-pipe cooling active

Hot water

General

Three hot water temperatures can be selected. Economy, Normal and Lux.
The demand for, charging and energy type is based on the settings for hot water comfort. Hot water may only be produced by compressor except in cases where:
- DM less than Start_DM-Start_DM_additional heat and Start_DM_additional heat is greater than 0
- DM less than Start_DM+Start_DM_additional heat and Start_DM_additional heat is less than 0

Priority sequence

Hot water is produced according to the following function/setting:

1.	Selecting hot water production. (Yes/No.)
2.	Alarms are handled in relation to the selected alarm action.
3.	Temporary lux.
4.	AUX input "temporary lux".
5.	Holiday setting.
6.	Periodic increase.
7.	Scheduling hot water.
8.	Normally set comfort mode.

Hot water capacity

The main menu displays a water drop with 3 fields to indicate how much hot water is available.

Average temp	Number of fields
Above 52 °C	3
Between 46 and 52 °C	2
Between 40 and 46 °C	1
Below 40 °C	0

The capacity is calculated on the average temperature of BT6 and BT7 if BT7 is connected, otherwise the values apply from BT6.

Hot water production Economy

Hot water demand occurs when:
- the temperature falls below the start temp on BT6.

Hot water demand ceases when one of the following conditions is filled:
- the temperature is above the stop temp on BT6.
- Condenser supply line: BT12 ≥ max condenser out -1K. (different depending on which external part is installed).
- Condenser return line: BT3 ≥ max condenser in - 1K. (different depending on which outdoor unit is installed).

Default values

Menu	Start temp. economy	Stop temp. economy
5.1.1	39 °C	43 °C

Limited so that the difference between start and stop temperature is at least 3 K.

Hot water production Normal

TIP
Selection of comfort mode (economy, normal and lux) made in menu 2.2.

Hot water demand occurs when:
- the temperature falls below the start temp on BT6. Hot water demand ceases when one of the following conditions is filled:
- the temperature is above the stop temp on BT6.
- Condenser supply line: BT12 ≥ max condenser out -1K. (different depending on which external part is installed).
- Condenser return line: BT3 ≥ max condenser in - 1K. (different depending on which outdoor unit is installed).

Default values

Menu	start temp. normal	stop temp. normal
5.1.1	42 °C	46 °C

Limited so that the difference between start and stop temperature is at least 3 K.

TIP
Selection of comfort mode (economy, normal and lux) made in menu 2.2.

Hot water production Lux

Hot water is produced by the compressor until the external part's maximum supply temperature (BT12) or maximum return temperature (BT3) is reached minus one degree and thereafter by the set additional heat.

Hot water demand occurs when:
- the temperature falls below the start temp on BT6.

Hot water demand stops when:
- the compressor cannot produce as above and the internal additional heat is blocked.
- the temperature is above the stop temp on BT6.
- the compressor can no longer produce and the internal additional heat is defined as 0 kW and there is no external additional heat.

Default values

Menu	Start temp. economy	Stop temp. economy
5.1.1	45 °C	49 °C

Limited so that the difference between start and stop temperature is at least 3 K.

TIP
Selection of comfort mode (economy, normal and lux) made in menu 2.2.

Hot water production below the balance point

Produces heating and hot water alternately.

Hot water production with internal immersion heater

When hot water production only occurs with the immersion heater, the max permitted electrical output is used according to menu 5.1.12.

Temporary lux

Temporary lux can be selected in menu 2.1. Selectable modes 3 h, 6 h, 12 h and Off.
No increase occurs if comfort mode Lux is selected.

Heating

Heating

Heat produced with selected outdoor unit.
Heating can also be created with one of the following:
- Internal electric additional heat before. QN10
- External additional heat

Continuous circulation of heat in the heating system occurs:
- GP12 circulates the heating system during heating operation and waiting mode.

Desired supply temperature calculated as function of filtered outdoor temperature with heat curve and any offset.

Degree minutes

The heating requirement is calculated every minute using the following formula (DM = Degree minutes):
New DM = Previous DM + (actual value- set point value)
Actual value is the temperature on BT2.
Actual value is the temperature on BT25. If not available, BT2 is used.

Set point value is the calculated flow temperature.
Degree minutes (DM):
- DM is calculated every minute.
- DM is calculated in steps of 0.1 and displayed in whole units.
- Manual change of DM occurs in units of ten, menu 4.9.3.
- At start-up DM is always 0.
- When heating is not permitted DM is locked on 0.
- Highest DM value is +100.
- Lowest DM value is the value of the last additional heat step connection plus the difference between additional heat steps.

Menu	Name	Factory setting
4.9.3	Start comp	-60
	Start addition	400
	Diff between additional heat step	30

Forced control of degree minutes

Forced control is used to stop the compressor and auxiliary heater when the actual value is too high in relation to the set point value.

NOTE
Forced control is not active during and 5 minutes after a start or a shift from one demand to another.

Menu	Name	Factory setting	Remarks
5.1.3	Max diff.	10 °C	Sets DM to: +1
	Max diff. additional heat	7 °C	Sets DM to: Start additional heat + diff between additional heat step +1

Heating curve

Curve coefficient and offset are used for setting of correct set point value.
15 heat curves can be used.

Menu	Name	Factory setting
1.9.1	Curve coefficient	7
	Curve offset	0

Point offset

With point offset, the heating curve can be changed at a specific outdoor temperature. The change starts 5 °C below and stops 5 °C above the set outdoor temperature point.

Menu	Name	Factory setting
1.9.8	Outdoor temperature point	0 °C
	Change in curve	0 °C

Own curve

In own curve the desired flow temperature is selected at fixed outdoor temperatures from-30 to +30 °C .

Menu	Name	Factory setting
1.9.7	Flow.temp-30 C	45 °C
	Flow.temp-20 C	40 °C
	Flow.temp-10 C	35 °C
	Flow.temp 0 C	32 °C
	Flow.temp 10 C	26 °C
	Flow.temp 20 C	15 °C
	Flow.temp 30 C	15 °C

Room sensor BT50

Connected to AA3-X6:3-4.
When the room sensor is connected the temperatures are displayed in the main menu. To affect the room temperature, it must be activated in menu 1.9.4. The size of the room temperature sensor influence is determined by the set factor.

The actual value of the flow line is changed by moving the offset:

(selected- current room temp.) x set factor = changing curve offset

Menu	Name	Factory setting
1.9.4	Control room sensor	Off

Cooling

Active cooling 4-pipe

Active cooling is produced by the air/water heat pump. The BA-SVM 10-200 can control one cooling-charge pump (-EQ1-GP12) and one cooling reversing valve (EQ1-QN12), and one cooling circulation pump (-GP13) using–BT64. An operating mode room sensor –BT74 can be connected to the intended location on the main product.

The cooling function is activated by filtered outdoor temperature (filtration time can be set) and any room sensors.

BT64 used for actual value during cooling operation. The set point value is determined by a straight line between set supply temperature at +20 °C and 40 °C in outdoor temperature. Cooling DM is calculated for start and stop of active cooling operation.

Cooling circulation pump (-GP13) is active when cooling is permitted.

Cooling charge pump (-EQ1-GP12) is active when cooling is produced and controls according to the graph below.

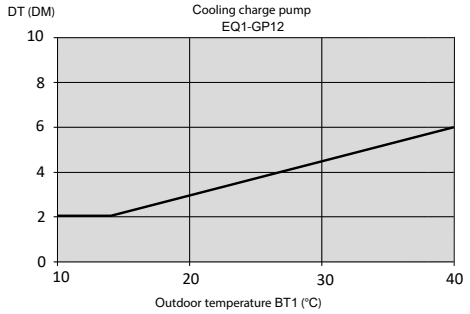

Scheduling

If scheduled times overlap each other with different adjustments a red exclamation mark is displayed to the right of the menu line.

Menus for setting the different schedules can be found in table:

Menu	Name
2.3	Scheduling hot water
1.3.1	Scheduling heating
4.7	Scheduling holiday
4.9.6 and 5.1.20.X	Scheduling silent mode

Hot water

Water heating can be scheduled in two periods. Selectable levels are Economy, Normal, Lux and Off.

Heating

Heating can be scheduled with three periods for each climate system. Changing the set point value for the room temperature sensor or changing the curve offset is optional.

Holiday

Holidays can be scheduled with a start date and a stop date. Changing the set point value for the room temperature sensor or changing the curve offset is selectable and for hot water Economy, Normal, Lux and Off can be selected.

Silent mode

Reduces the speed of the fan during the scheduled period to minimise the noise from the outdoor unit. Set with start and stop time for the specified day. If several machines are used, they can be controlled individually.

Addition

Immersion heater (EB1)

The immersion heater can be set up to a maximum of 9 kW.
Delivery setting is 9 kW.
The immersion heater output is divided into 7 steps. These 7 steps can then be restricted by BT63 as below.

Temp BT63 (°C)	No. of permitted steps
>80	0
>77	1
>74	2
>72	3
>72	No restriction

Max. output

As there are regulations that determine the maximum permitted electrical output for heating a building, the immersion heater's maximum output is locked to comply with these regulations.
One week after setting maximum output, the system locks permanently at this value and the display unit must be replaced if one later needs to increase the maximum output.

Heating mode

During heating operation the immersion heater is controlled by the degree minute calculation.

Menu	Name	Factory setting	Remarks
5.1.12	Max electrical output	9 kW	
4.9.3	start addition	400 DM	Degree minute deficit for start of additional heat.
	diff. between additional steps	30 GM	

Hot water operation

All additional heat must have been stepped out before changing to hot water, see calculating hot water demand.
When shifting back to heating, the additional heat step must be stepped in as indicated by DM.

Function during defrosting

If BT6 or EB101-BT3 is less than Tank defrost temp (see image).

Hot water is prioritised until Tank defrost temp has been reached.

QN 10 towards hot water and additional heat is used until the tank defrost temp + 5K has been reached.

Conditions for tank defrosting depending on the value for-BT3.

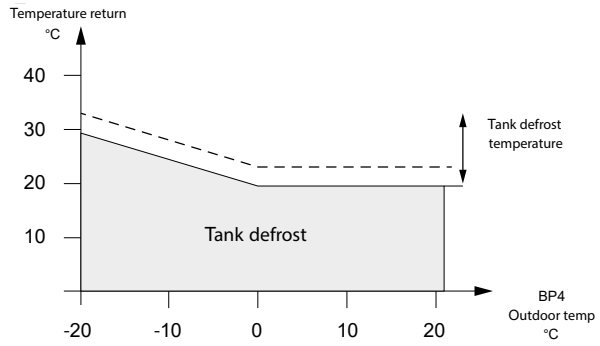

Load monitor

The current sensors are connected to AA3-X4:1-4.
Function:

- If any of the internal phases exceed the set value and the phase sequence is not detected, electrical power is disconnected from one of the internal phases. Because the phase sequence is not detected this can mean that the incorrect phase sequence is disconnected, so that the output is still too high. The heat pump continues by disconnecting another phase, until the current does not exceed the set value. If the current still exceeds the set value when all internal phases are disconnected, the same process is performed for external additional heat, if applicable and is set to step-controlled additional heat.
- If the phase sequence is detected the electrical output is disconnected in the phase that exceeds the set value. This will also handle any external additional heat.
- If disconnecting the phases does not work, the heat pump will finally disengage.
- Reconnection occurs when the current has fallen to a value low enough to permit reconnection.

NOTE
Do not disconnect the external additional heat if it is set to give additional heat in one step.

NOTE
BA-SVM 10-200 must be filled with water before the phase sequence is detected.

For the heat pump to disconnect the electrical output in the correct phase, the phase sequence must have been detected during the installation. In the menu 5.1.12 the phase sequence must be detected afterwards. An unsuccessful detection may be due to the current sensors not being correctly connected or that other electrical equipment started or stopped during detection.

Menu	Name	Factory setting
5.1.12	fuse size	16A

1-phase inverter stepping out:
Variant of load monitor designed to be used in instances where 1-phase inverters are used.

Compressors together with 3-phase disconnectable additional heat:
Load monitor initially disconnects the immersion heater's output. Finally the heat pump frequency is reduced.

If this phase is used to drive 1-phase inverter compressor:
Initially, the step-controlled additional heat is disconnected from this phase as per the section above regarding disconnecting the step-controlled additional heat.

If the electrical power still exceeds the set value the compressor slows to 20 Hz per 30 seconds until the electrical power falls below the set value.

External connection options

AUX inputs
There are 5 x external inputs with selectable function.
Connected on AA3-X6:9-18.
The selectable functions are activated in menu 5.4.
Selectable functions that are active when the input is connected:

AUX1-5
- Not used.
- Activate temporary lux
- External adjustment
- Block additional heat
- Blocking Compressor
- Block heating
- Block cooling
- Cooling/heat sensor (BT74)
- Tariff blocking
- SG ready A
- SG ready B
- External alarm (NC)
- External alarm (NO)
- +Adjust

AUX outputs
The selectable functions on the AUX output AA3-X7 (max 2 A) are activated in menu 5.4:

AA3-X7
- Not used
- Add heat in series
- Alarm output
- Cooling mode indication
- Hot water circulation
- Ext. heating medium pump

Extra additional heat in charge circuit

Controls (via the AUX output, terminal X7) additional heat which is in series between heat pump and BA-SVM 10-200. The additional heat controls in one step and is intended to support the installation when the heat pump is stationary.

The additional heat must be dimensioned so that it is in proportion to the installed heat pump. Because the additional heat output is not known and an output is required for the pump regulator, 7,5 kW is assumed.

If "add heat in series" is selected on the AUX output and the degree minutes are less than the selected value in menu 4.9.3 "start compressor", the AUX relay opens during the following:
- Red light alarm from heat pump
- Communication alarm from heat pump.
- Cold outdoor air, heat pump.
- Only additional heat selected in menu 4.2.

The AUX relay must be off if the degree minutes are greater or equal to 0 DM.

When the AUX relay is on, charge pump GP12 must run:
- If the speed is set to "manual speed" in menu 5.11.1.2, GP12 is run according to the menu settings.
- If the speed is not set to "manual speed" in menu 5.11.1.2, GP12 runs and calculates that the additional heat in the charge circuit produces 7,5 kW. GP12 runs as if the internal additional heat is on.

Circulation pumps

Heating medium pump (GP12)

The heating medium pump GP12 is active if heat production is permitted and intermittent is not selected in menu 5.11.1.2.

Heating

A diagram is created for a certain DOT to optimise the energy transfer (in this case -20 °C). The diagram shows target delta-T for three different climate systems.

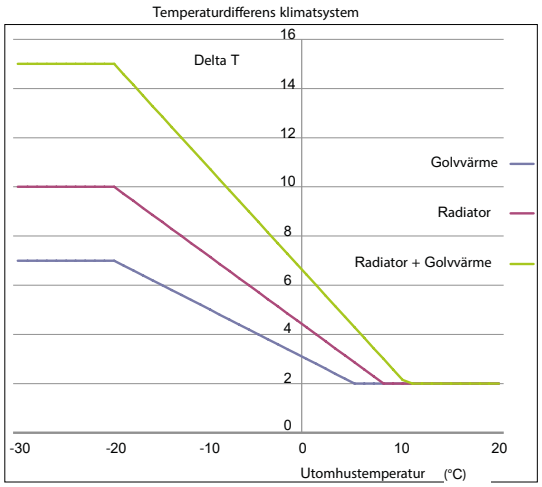

General formula:
Delta = (DT-max / DOT - Stop-heating) x (BT1 - Stopheating)

Constants	Under floor heating (°C)	Radiator (°C)	Under floor heating + Radiator (°C)
Stop-heating	15	15	15
DT-max	15	10	7
DUT	-20	-20	-20
DT-min	4	4	4 (inverters) 7 (on/off machines)

Determining the speed using regulator:

- For AMS 10, control is locked and run at the last calculated speed whilst defrosting is initiated but no actual defrosting has started yet.
- During compressor operation only, BT12 and BT3 are used in EB101 for calculation.
- During operation with compressor and when internal electric additional heat EB1 is activated, BT12 and BT3 are used in EB101 for calculation. 30 % is the minimum permitted speed when the internal electric additional heat EB1 is active.
- During operation with only internal electric additional heat EB1 is used BT63 for BA-SVM 10-200 and BT3 for EB101 for calculation. 30 % is the minimum permitted speed when the internal electric additional heat EB1 is active.
- When shifting between different demands (e.g. heating-hot water), starting the compressor and replacing controlling sensors, GP12 starts at the highest of the read-off values in the graph (Pump speed at start) and at the speed the new demand had the last time it was run. This applies to all demands (heating, hot water, pool and cooling). This speed is then locked for 2 minutes.

Menu	Setting	Selection	Default	Miscellaneous
5.11.1.2	Operating status auto.heating	Auto/intermittent	Auto	
	Operating status auto.cooling	Auto/intermittent	Auto	2-pipe cooling
	Heating auto	Auto/manual	Auto	
	Heating manual	1-100%	70%	Only when manual is selected in heat auto
	Hot water auto	Auto/manual	Auto	
	Hot water manual	1-100%	70%	Only when manual is selected in hot water auto
	Pool auto	Auto/manual	Auto	
	Pool manual		70%	Only when manual is selected during pool auto
	Cooling auto	Auto/manual	Auto	
	Cooling manually			Only when manual is selected during cooling auto
	Speed in waiting mode	1-100%	30%	
	Highest permitted speed	80-100%	100%	
5.1.14	Preset/own setting	• Radiator • Under floor heating • Rad+under floor heating DOT °C	Pre-set: Radiator -18 °C	
	DOT °C	(-40)-20	-18	
	Own setting	10.0 dT at DOT -18 DOT °C	10.0 dT at DOT -18 DOT °C	
	Dt at DOT	2-20	10	

Pump speed at start

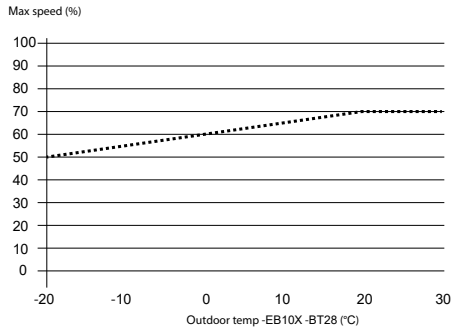

Flow settings charge pump GP12

This function is used to check the flow between indoor and outdoor units. The purpose of the function is to be able to diagnose the fault in the event of suspected flow related problems.

Program sequence:

- Check that BT6 is less than 40*C otherwise the text "Drain hot water to cool Water heater" appears.
- Sets reversing valves to HW-mode.
- Starts GP12 and runs at maximum speed.
- Starts the compressor.

For on/off models the following applies: if the compressor does not start within 10 minutes, the flow setting is cancelled and information is given stating that the compressor could not be started.

For inverter models the following applies: if the compressor does not start or reach 55 hz within 10 minutes, the flow setting is cancelled and provides information stating that the compressor could not be started/reach the desired frequency.

For 1-phase inverters, the phase that the 1-phase inverter is connected to is detected. A message is given stating that the 1-phase inverter is being detected. When the phase has been detected the message "Compressor detected on phase L?" is shown. If the compressor could not be detected the message "Could not detect compressor phase" is shown. This function may run during the 5 minutes that the compressor is to run before the flow checks below are started.

- Ensure that the compressor has run for at least 5 minutes.
- Shows blank screen with 5 minutes countdown.
- Shows highest recommended Δt for the given outdoor temperature.
- Shows relevant Δt above BT12 and BT13 (the updating frequency is 10 seconds) and calculates an average value over 10 seconds.
- The user adjusts the flow
- Increase/Decrease the flow indicated in the display depending on the conditions for the selected heat pump (slave1)
- When the condition has been met for 1 minute, "Pump setting OK" appears.
- When the user exits the menu, control of the charge pump is released again and returns to the same operating mode as for the setting.

Dimensioned flow for BA-SVM 10-200 is 12 kW at 9 °C. It gives a flow corresponding to 1150 litres. The coil in the water heater can be deemed to correspond to the pressure drop in the radiator circuit. For smaller external parts, AMS 10, 20% less flow than the dimensioned flow is permitted.

Hot water

If hot water in menu 5.11.1.2 is set to auto, GP12 controls according to "Determining the speed using regulator", otherwise after the manually set speed.

POOL

If pool in menu 5.11.1.2 is set to auto, GP12 controls according to "Determining the speed using regulator", otherwise after the manually set speed.

Defrosting

Any control is stopped

During defrosting the speed is set to a maximum of:

- The average value of the speed GP12 that the compressor ran to meet the heating demand of the current defrosting/ manually set speed for the 2 last minutes.
- 50 %

During tank defrost the speed is set to a maximum of:

- The average value of the speed GP12 that the compressor ran to meet the heating demand of the current defrosting/ manually set speed for the 2 last minutes.
- 70 %

At completed defrosting:

- If GP12 is controlled, it returns to 30 % higher speed than it had just before defrosting. The exception is if priority shift occurs during/in conjunction with defrosting. This priority shift is then treated as a normal shift.
- If GP12 is not controlled, GP12 returns to the speed set for respective demand according to menu 5.11.1.2.

During passive defrosting:

- GP12 controlled according to operating mode Auto/Intermittent in menu 5.11.1.2

If GP12 is stationary regardless of operating mode, the pump exercising function is used.

In emergency mode, GP12 is run without PWM signal, which means that it runs at maximum speed.

External heating medium pump GP10

GP10 is an external heating medium pump, installed after reversing valve QN10, and also enables DM calculation during hot water charging.

GP10 runs when:
- hot water is produced and heating or 2-pipe cooling is permitted.
- heating is permitted and 4-pipe cooling or pool is produced.
- 4-pipe cooling installed and cooling is permitted and operating mode EQ1 - GP12 is auto.

Otherwise, GP10 is stationary.

Supply pump exercise
All connected pumps are exercised for 7 seconds every 100 hours after they were last active.
Speed controlled pumps are run at 75 % of the speed.

Valves

Reversing valve (QN10)
The reversing valve QN10 controls towards hot water during hot water production and tank defrosting, otherwise towards the heating system.

Function
When shifting to and from 2-pipe cooling, QN10 remains in the position the previous demand had for 30 seconds, then QN10 shifts to the relevant demand.

When shifting to and from 4-pipe cooling, QN10 remains in the position the previous demand had for 60 seconds, then QN10 shifts to the relevant demand.
If there are no other demands, QN10 sets to the heating system after completed hot water charging.

During defrosting (not defrosting to tank), QN10 always sets itself to heating mode to then, 30 seconds after completed defrosting, shift to the relevant demand.

QN10 is usually towards the heating system except:
- If EB101 or EB1 run and there is a hot water demand, QN10 sets itself to hot water.
- During defrosting to tank.

In emergency mode, QN10 is towards the heating system (port B: control phase off).

Valve exercising

All connected reversing valves and shunts are exercised for 20 seconds at the most every 100 hours after they were last active and there are no demands. When the start guide is active, all reversing valves oscillate and shunt between their outer positions to ensure that the system is bled.
Floor drying
The floor drying function is activated in menu 5.9.
When it is activated the calculated flow is set to the set values in menu 5.9. 7 periods can be selected where the number of days and calculated flow can be set.

When the floor drying function is active the number of days remaining is shown in the bottom edge of the display. The memory stores the progress of the program, so that the function can be resumed when it was interrupted by a power cut or similar.

All climate systems calculated flow are set to the set when floor drying is active.
Hot water is not produced when the floor drying function is active.

Menu	Name	Setting range
5.9	Period length 1-7	0 – 30 days
	Calculated supply temperature 1-7	15- 70 °C

Uplink
Nibe Uplink is a program and hardware that makes it possible to control and access data in BA-SVM 10-200 via a computer and the Internet.

Range of services
Via BA-SVM 10-200 you have access to different levels of service. A basic level that is free and a premium level where you can select different extended service function for a fixed annual subscription fee (the subscription fee varies depending on the selected functions).

Service level	Basic	Premium[1)]
Viewer	X	X
Alarms	X	X
History[2)]	X	X
Extended history[3)]		X
Change settings[4)]		X

[1)] - These functions are available at premium level.
[2)] - History means 1 month's history of a limited amount of parameters depending on the system.
[3)] - Extended history means history since connection of BA-SVM 10-200, of a further 30 parameters depending on the installation.
[4)] - Change settings means in essence full access to the menus "INDOOR CLIMATE", "HOT WATER" and "HEAT PUMP" (with the exception of certain sub-menus such as "time & date", "my icons" and "sms").

Requirements

The following is required in order for Uplink to work with your BA-SVM 10-200 installation:

- Compatible system.
- Network cable Cat.5e UTP (straight, male-male), wired network communication.
- Internet connection (broadband).
- Web browser that supports JavaScript. If you use

Internet

Explorer it must be version 7 or higher. See the help file in your web browser for more detailed information about how to activate JavaScript.

Fault tracing Uplink server

You can read about the connection to Uplink in the menu SERVICE INFO 3.1.

	No network connection	Network connection OK
Internet		
status	0:0	200:0
network cable	no	yes
ip set	no	yes
http connection	no	yes
connected	no	yes
dhcp	to	to
proxy	off	off

Status value (example in the table above 0:0 and 200:0) states what type of error has occurred.
First status value: Second status value.

First status value		Second status value	
12	Proxy error	0	OK
200	OK	11	Packet error
400	Bad request	19	Invalid serial number
407	Proxy error	20	Unknown product (Display probably used previously, reset identification)
500	Server error	21	Server error (even other codes than this may occur)

Smart Grid (SG)

Smart Grid is used to control the behaviour of BA-SVM 10-200 depending on access to the electricity on the electrical network.
The Smart Grid function has four different positions. In each of these modes, the relevant action is specified. Mode is selected via AUX inputs 1-2 as follows:

SG-mode	SG ready A	SG ready B
Position 1: Free electricity	1	1
Position 2: Low price	0	1
Position 3: Normal price	0	0
Position 4: High price	1	0

Depending on the menu selection in menu 4.1.5, the user can select whether the room temperature, hot water, pool and cooling are to be affected by the SG function.

Menu	Setting	Selection	Default	Description ID	Miscellaneous
4.1.5	Affect room temperature	Yes/No	Yes	SG heating	
	Affect hot water	Yes/No	Yes	SG DHW	
	Affect pool temperature	Yes/No	Yes	SG pool	Only shown if pool is docked
	Affect cooling	Yes/No	Yes	SG cooling	Only shown if cooling is docked

SG modes

Position 1: Free electricity

- Heating: Parallel offset increases by +2. If a room sensor is used, 2K is added to the set desired temperature.
- Hot water: Sets comfort mode lux.
- Pool: Pool start and stop temperatures increase by 2K.

- Active cooling: Parallel offset decreases -1. If a room sensor is used, the set desired temperature decreases by 1K.

Position 2: Low price
- Heating: Parallel offset increases by +1. If a room sensor is used, the set desired temperature increases by 1K.
- Hot water: Does not change comfort mode. The HW_stop-value is removed and the hot water is charged until the hot water demand ceases due to the condenser's conditions.
- Pool: Pool start and stop temperatures increase by 1K. Active cooling: No change.

Position 3: Normal price
- Heating: No change.
- Hot water: No change.
- Pool: No change.
- Active cooling: No change.

Position 4: High price
- Heating: Parallel offset decreases by-1. If a room sensor is used, the set desired temperature increases by-1K.
- Hot water: Set to comfort mode economy.
- Pool: Blocked.
- Active cooling: Blocked.

USB

Supported devices

The only USB devices with security that are supported are USB memories without special software, such as:
- Kingston DataTraveler 1/2/4 GB

In theory, the control system supports all devices in the mass storage class, that is any hard discs and USB memories that do not use special software or drivers.

The other factor that limits which devices can be used is the file system. The file systems used with USB memories are often FAT16 (most common with memories <= 2 GB) and FAT32 (most common with memories >= 4 GB), both these file systems are supported at present. External hard discs often use NTFS as a file system which makes it probable that an existing USB hard disc would not work without being formatted.

To bear in mind when using USB

When a program file, log setting file or settings file is copied to a USB drive from Windows it is not always guaranteed that the file has been correctly saved unless a "safe removal" has been carried out, therefore the memory stick should not be pulled out of the machine before the operation is completed and Windows informs that "It is now safe to remove the device * from the system".

When data logging to a USB drive, data can be corrupted or lost if the USB drive is not removed correctly. Correct procedure is to deactivate logging and then wait 3 seconds before the USB drive is pulled out of the machine

Logging

Standard parameters
The following parameters are logged as standard in a

BA-SVM 10-200:
- Date
- Time
- Version
- Current operating mode prioritisation
- BT1 Outdoor temp
- Average value outdoor temp.
- EB15-BT2 Heating medium supply
- EB15-BT3 Heating medium return
- EB15-BT63 Heating medium after immersion heater
- EB15-BT6 HW charging
- EB15-BT7 HW charging, top
- Calculated supply
- Actual value of Degree minutes
- Status GP12
- Speed GP12
- Status
- Alarm
- Relay status of base card (AA2)
- Power step number

Heat pump:
- EB10X-BT12 Condenser out
- EB10X-BT3 Return
- EB10X-BT14 Hot gas
- EB10X-BT17 Suction gas
- EB10X-BT16 Evaporation
- EB10X-BT15 Fluid pipe
- EB10X-BT28 Outdoor temperature

If AMS 10 is connected:
- EB 10X-BP4 Pressure transmitter
- Low pressure transmitter located in the MHI part
- Current compressor frequency
- Calculated compressor frequency
- Protection mode
- And also the following, if connected:
- EB15-BF1 flow meter
- BT25 external supply temperature sensor
- BT50 Room temperature
- BT51 Pool sensor

TIP
Selection of comfort mode (economy, normal and lux) made in menu 2.2.

NIBE Applications

Nibe Applications software is used to manage settings files and log files.

Updating software

NIBE supplies updated software and instructions for upgrading at www.nibe.eu/software.

Accessories

Active cooling 4-pipe
Address (dipswitch setting): 1101 0100
When cooling is permitted the following applies:

Current menus

Menu	Name	Factory setting
1.9.5	min. temp. cooling flow	10 °C
	cooling flow temp. at +20°C	3 °C
	cooling flow temp. at +40°C	6 °C
	time betw. switch heat/cool	2 hrs
	use room sensor	None
	heat at room under temp.	1,0
	cool at room over temp.	1,0
4.9.2	start cooling	25 °C
	stop heating	17 °C
	stop additional heat	5 °C
	filtering time	24 hrs

Connections, accessory card

Input	Function
X2:23-24	block cooling

Input	Function
K1	Circulation pump cooling (GP13)
K2	Mixing valve (QN18), close
K3	Mixing valve (QN18), open
K4	Reversing valve (QN12)

Mixing valve controlled additional heat (AXC 40)

Address (dipswitch setting): 1010 0000

- DM calculated on BT25.
- Additional heat signal is given when GM ≤ starts additional heat.
- The shunt valve controls to maintain calculated temp on BT25.
- The shunt valve controls the number of whole seconds as the difference (calculated supply temperature BT25 supply temperature sensor) * shunt valve amplification. The shunt valve opens for even numbers and closes for odd numbers.
- The mixing valve is stationary during the waiting period.
- The mixing valve closes if DM > start compressor.
- At start up the shunt valve closes for 120 secs.

Current menus

Menu	Name	Factory setting
5.1.12	start tillsats	-400
5.3.2	minimum running time	12 hrs
	lowest temperature	55 °C
	shunt amplification	1,0
	shunt waiting time	30 secs

Connections, accessory card

Input	Function
X2:21-22	boiler sensor
X2:23-24	external blocking

Output	Function
K1	External addition (burner) permitted
K2	Mixing valve, close
K3	Mixing valve, open
K4	External circulation pump

Step controlled additional heat (AXC 40)

Address (dipswitch setting): 1110 1000

- When DM is below the set start DM the additional heat is started and steps in as the DM falls / steps out as DM increases.
- Time between step ins = 60 secs.
- Time between step outs = 2 secs.
- Additional heat is only allowed to step out when heating is permitted and when the additional heating is permitted in heating mode and the input for blocking is not connected.

Current menus

Menu	Name	Factory setting
5.3.6	start tillsats	-400
	diff. between additional steps	100 GM
	max. step	3
	Linear/binary control	

Connections, accessory card

Input	Function
X2:23-24	Block step controlled additional heat

Output	Function
K1	Step 1
K2	Step 2
K3	Step 3

Hot water circulation (AXC 40)

Address (dipswitch setting): 1001 0000.
Hot water circulation (HWC) GP11.
The circulation pump is active for a set operation and downtime time during a selected period.

Menu	Setting	Factory setting	Notes
2.9.2	Period 1	Off	Time when HWC must be active
	Period 2	Off	Time when HWC must be active
	Period 3	Off	Time when HWC must be active
	Run time	3 min	
	Downtime	12 min	
5.2.4	Activating hot water comfort	On	

Connections

Output	Function
K1	-
K2	-
K3	-
K4	HWC pump GP11

Energy measurement kit (EMK 300)

The flow meter is installed on the supply line from EB101 with the arrow in the direction of flow.
The temperature is measured using the installation's existing sensor.

- Activated in Menu 5.2-System settings.

Pool (POOL 40)

Address (dipswitch setting): 0110 0000

- During simultaneous heating demand the priority is determined by the settings made in menu 4.9.1.

Current menus

Menu	Name	Factory setting
4.1.1	activated	
	start temp	22 °C
	stop temperature	24 °C
4.9.1	op. prioritisation	
5.1.11	Heating medium pump speed	
5.2	Activating/deactivating of accessories	

Connections, accessory card

Input	Function
AA5-X2:21-22	external blocking
AA5-X2:23-24	Pool sensor (BT51)

Output	Function
AA5-X9:7-8	Circulation pump (GP9)
X1-3	Circulation pump (GP9)
AA5-X9:5	Blue cable Reversing valve motor (QN19) as well as circulation pump (GP14)
AA5-X9:6	Black cable Reversing valve motor (QN19) as well as circulation pump (GP14)
AA5-X10:2	Brown cable Reversing valve motor (QN19).
AA5-X2:5	PWM Brown cable (GP14).
AA5-X2:6	PWM Blue cable (GP14).

Intput	Function
K1	-
K2	-
K3	Pool reversing valve (QN19) as well as (GP14).
K4	Pool pump (GP9)

Extra shunt group (ECS 40/41)

Address, climate system 2 (inst. dipswitch): 0100 0000
Address, climate system 3 (inst. dipswitch): 1100 0000
Address, climate system 4 (inst. dipswitch): 0010 0000

When heating is permitted, the shunt is controlled to the calculated flow temperature and when cooling is permitted the shunt is controlled to the minimum flow temperature, in relation to supply temperature sensor 2/3/4.
The shunt valve controls the number of whole seconds as the differential (calculated flow temperature 2/3/4 – supply temperature sensor 2/3/4) * shunt valve amplification. The mixing valves open for even numbers and close for odd numbers. The mixing valves are stationary during the waiting period 2/3/4.

Menu	Name	Factory setting
1.1	Parallel offset	0
1.9.1	heating curve	9
1.9.2	external adjustment 2/3/4	0
1.9.3	min. flow line temp.	15 °C
1.9.4	Room sensor	No
5.1.2	Max calculated flow	60 °C
5.3.3	mixing valve amplifier	1.0
	mixing valve step delay	30 secs

Connections, accessory card

Input	Function
X2:23-24	Room sensor system 2/3/4
X2:21-22	Return line sensor 2/3/4
X2:23-24	Flow line sensor 2/3/4

Output	Function
K1	Mixing valve, close
K2	Mixing valve, open
K3	External circulation pump

Communications module (MODBUS 40)

LED	Indication
BATT	No function.
RUN	No function.
COM1	Flashes during communication with the heat pump.
LED 4 (-)	No function.
LEV	No function.
COM2	No active communication between Modbus 40 and "external control".
SYNC	No function.
VCC	A steady light means that supply voltage is OK.

Room unit (RMU 40)

- The room unit is connected to the input circuit board (AA3-X4).
- Allows basic settings of temperature, hot water and operating mode to be set remotely.
- If the alarm occurs the room unit displays the relevant alarm number.
- The room sensor in the room unit is activated for control of heat production via menu 1.9.4.

Current menus

Menu	Name	Factory setting
5.2	RMU 40 system x	No
1.9.4	Control room sensor system x	No
	Factor system x	-

Air/water heat pump (EB101)

EB101 with inverter controlled compressor
EB 101 always controlled using a frequency table. There are 3 different frequency tables for heating operation depending on climate. During hot water charging the frequency table uses high power.
EB 101 has different maximum frequency according to the following:

Model	AMS 10-8 (rps)	AMS 10-12 (rps)
BT28 ≤ 2°C	118	120
2°C < BT28 ≤ 18°C	81	85
BT28 > 18°C	74	60

Heating mode

Menu 5.1.23 Requested compressor frequency is auto:

- There are 3 different standard folders depending on climate. The different models of EB 101 are thought to cover a peak output demand according to the following:

Model	AMS 10-8	AMS 10-12
Max output requirement at DOT	8kW	12kW

- DOT already controls the circulation pumps. The same DOT is used here to determine which folder is to be used.

DUT	-6 °C	-6 °C–15°C	15 °C
Folder	-4 climate	-12 climate	-20 climate

Hot water operation

Menu 5.1.23 Requested compressor frequency hot water is auto:

- Uses folder high output.

Pool

Menu 5.1.23 Requested compressor frequency pool is auto:

- Uses folder high output.

Cooling mode

Menu 5.1.23 Requested compressor frequency cooling is auto:

- EB 101 runs at min speed.

Defrosting inverter controlled compressor

When EB 101 initiates defrosting, control is follows:
Defrosting first starts after EB 101 has initiated defrosting for longer than 40 seconds.

Defrosting to water heater

If there is insufficient energy in the heating system, defrosting occurs to water heater.

Defrosting to water heater is performed in following cases:

- Return temperature BT3 is less than TankDefrost-Temp (see diagram below).
- The temperature of BT12 is less than 10 °C.
- The value on BP4 is greater than MinFlowThreshold (see diagram below).
- Heating is blocked.

If any of the following occurs for longer than 40 seconds, during defrosting to the system, defrosting occurs to the water heater:

- The temperature of BT12 is less than 10 °C.
- BP4 is greater than MinFlowThreshold.

If the value of BT6 is less than TankDefrostTemp must be:

- Hot water prioritised until TankDefrostTemp achieved, i.e. QN10 is towards hot water and additional heat (EB1) is used for TankDefrostTemp + 5 °C has been reached.

After completed defrosting the compressor resumes to meet the demands it made before defrosting.

Conditions for tank defrosting depending on the value for-BT3.

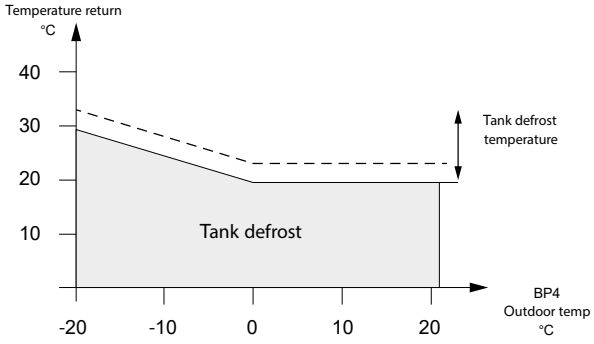

Conditions for tank defrosting depending on the value for BT3-BT12.

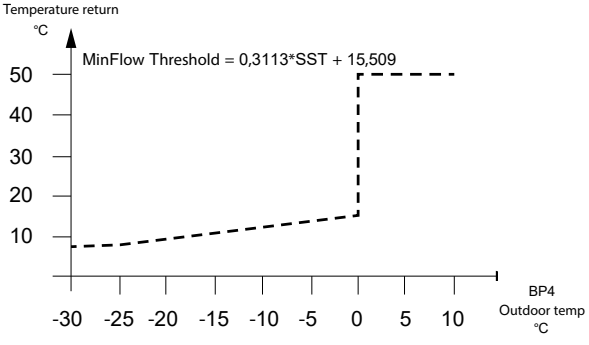

Frequency folders heating operation:

T outdoors	-20 climate	-12 climate	-4 climate
-9 to-20	120	120	120
-8	115	120	120
-7	100	120	120
-6	92	120	120
-5	77	102	120
-4	70	93	120
-3	64	85	120
-2	58	77	120
-1	52	69	120
0	47	62	105
1	41	54	90
2	37	48	81
3	32	37	57
4	30	36	49
5	27	33	46
6	25	30	43
7	25	36	38
8	25	25	35
9	25	25	30
10 to 43	25	25	25

Frequency folder hot water operation and pool:

T outdoors	High output
-9 to 20	120
-8	118
-7	115
-6	112
-5	110
-4	107
-3	105
-2	102
-1	98
0	94

T outdoors	High output
1	90
2	85
3	69
4	67
5	65
6	63
7	63
8	62
9	62
10	50
11	50
12	49
13	49
14	48
15	47
16	47
20	43
23	40
27	37
30	34
36	32
43	30

blockFreq

Menu	Setting	Selection	Default	Description	Miscellaneous
5.11.1.1	blockFreq 1	Start frequency 1/ Stop frequency 1	"Off"	blockFreq 1	blockFreq blocks at frequencies of 5 rps
5.11.1.1	blockFreq 2	Start frequency 2/ Stop frequency 2	"Off"	blockFreq 2	blockFreq blocks at frequencies of 5 rps

blockFreq blocks at frequencies of 5 rps. Compressor control continues as normal. When a blocked frequency is requested, it is initiated and only shows the last permitted frequency. However, the blocked frequency is used as input to the regulator.

EB101 with On/Off control
Off and on controls BA-SVM 10-200.

Menu	Setting	Selection	Default	Description	Miscellaneous
5.11.1.1	Setting A4	20-60 minutes	20 min	Minimum time interval between start and stop	See manual for respective EB101
	Setting A5	-15°C to +10°C	0°C	Balance temperature	See manual for respective EB101
	Setting A6	1- 120 min	120 min	Continuous run time before additional heat is permitted	See manual for respective EB101
	Setting A7	-25°C to 0°C	-20°C	Stop temperature	See manual for respective EB101
	Setting A8	10- 90 min	See manual for respective EB101	Minimum running time	See manual for respective EB101
	Setting A9	-4°C to 0°C	-3°C	Start temperature for permitted defrosting	See manual for respective EB101
	Setting A10	10°C to 40°C	20°C	Stop temperature for defrosting	See manual for respective EB101
	Setting A12	Off/On	Off	Manual activation of active defrosting procedure	See manual for respective EB101
	Setting A14	Off/On	Off	Activation of the function collar heater	See manual for respective EB101
	Setting A15	Off/On	Off	Activating the deicing fan function	See manual for respective EB101

Current menus

Menu	Name	Factory setting
5.1.14	DUT	- 18
5.1.23	Frequency curve heating	Auto
	Frequency curve hot water	Auto
	Frequency curve cooling	Auto
5.11.X.1	Cooling permitted	No
	Silent mode permitted	
	Compressor phase	L3

Defrosting On/Off-controlled compressor
When EB 101 initiates defrosting, control is follows:

Defrosting to water heater
If there is insufficient energy in the heating system, defrosting occurs to water heater.

Defrosting to water heater is performed in following cases:
- Return temperature BT3 is less than TankDefrost-Temp (see diagram below).
- The temperature of BT12 is less than 10 °C.
- The value on BT3 - BT12 is greater than Min-Flow-Threshold (see diagram below).
- Heating is blocked.

If any of the following occurs for longer than 40 seconds, during defrosting to the system, defrosting occurs to the water heater:
- The temperature of BT12 is less than 10 °C.
- BT3- BT12 is greater than MinFlowThreshold.

If the value of BT3 is less than TankDefrostTemp must be:
- Hot water prioritised until TankDefrostTemp achieved, i.e. QN10 is towards hot water and additional heat (EB1) is used for TankDefrostTemp + 5 °C has been reached.

After completed defrosting the compressor resumes to meet the demands it made before defrosting.

Conditions for tank defrosting depending on the value for-BT3.

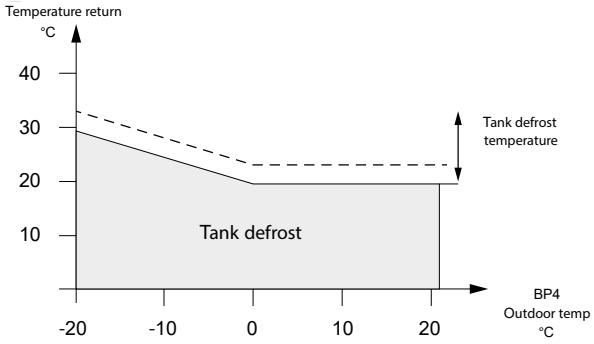

Conditions for tank defrosting depending on the value for BT3-BT12.

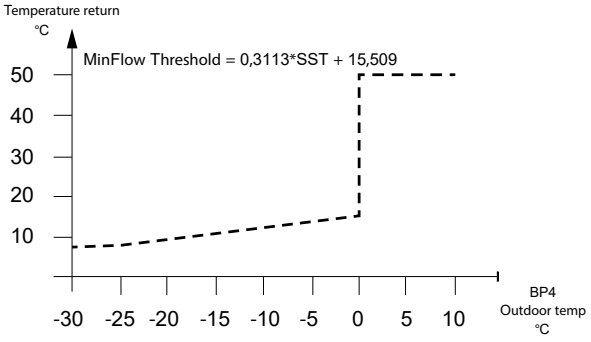

5 Current circuit

Load monitor

The current sensors connects to AA3-X4: 1-4.

Function:

- If any of the internal phases exceed the set value and the phase sequence is not detected, electrical power is disconnected from one of the internal phases. Because the phase sequence is not detected this can mean that the incorrect phase sequence is disconnected, so that the output is still too high. The heat pump continues by disconnecting another phase, until the current does not exceed the set value. If the current still exceeds the set value when all internal phases are disconnected, the same process is performed for external additional heat, if applicable and is set to step-controlled additional heat.

> *CAUTION*
> Do not disconnect the external additional heat if it is set to give additional heat in one step.

- If the phase sequence is detected the electrical output is disconnected in the phase that exceeds the set value. This will also handle any external additional heat.
- If disconnecting the phases does not work, the heat pump will finally disengage.
- Reconnection occurs when the current has fallen to a value low enough to permit reconnection.

> *CAUTION*
> BA-SVM 10-200 must be filled with water before the phase sequence is detected.

For the heat pump to disconnect the electrical output in the correct phase, the phase sequence must have been detected during the installation. In the menu 5.1.12 the phase sequence must be detected afterwards. An unsuccessful detection may be due to the current sensors not being correctly connected or that other electrical equipment started or stopped during detection.

Menu	Name	Factory settings
5.1.12	fuse size	16A
	detect phase order	

1-phase inverter stepping out:

Variant of load monitor designed to be used in instances where 1-phase inverters are used.

Compressors together with 3-phase disconnectable additional heat:

Load monitor initially disconnects the immersion heater's output. Finally the heat pump frequency is reduced.

If this phase is used to run 1-phase inverter compressor:
Initially, the step-controlled additional heat is disconnected from this phase as per the section above regarding disconnecting the step-controlled additional heat.

If the electrical power still exceeds the set value the compressor decrease speed with 20 Hz per 30 seconds until the electrical power falls below the set value.

6 Component description

Components

Component	Description
Immersion heater (EB1)	Power output: 230V (3x1500W) or Power output: 400V (3x3000W) 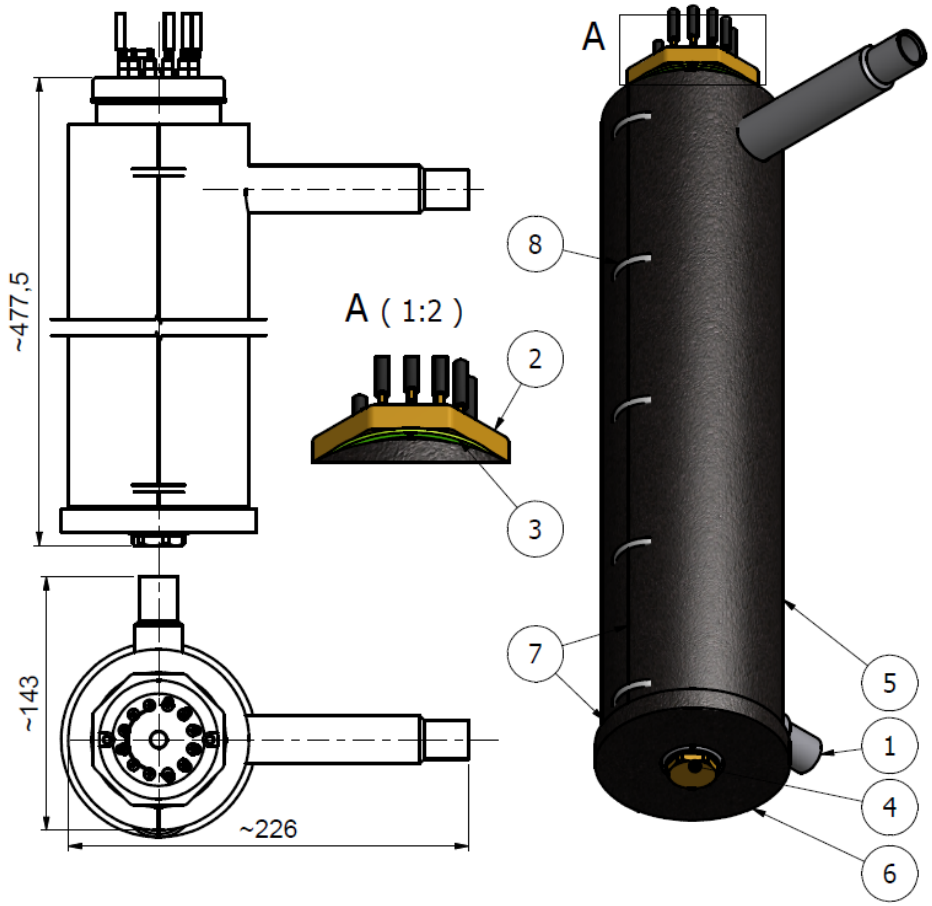

Component	Description
Reversing valve, hot water/climate system (QN10), Reversing valve, heating system/ cooling system (QN12)	Actuator motor: 7 VA, 230/24 VAC, 50 Hz, IP 40. Running time approx 8 sec. Max. operating pressure: 1.0 MPa Operating temperature: 5- 80 °C (90 °C briefly) 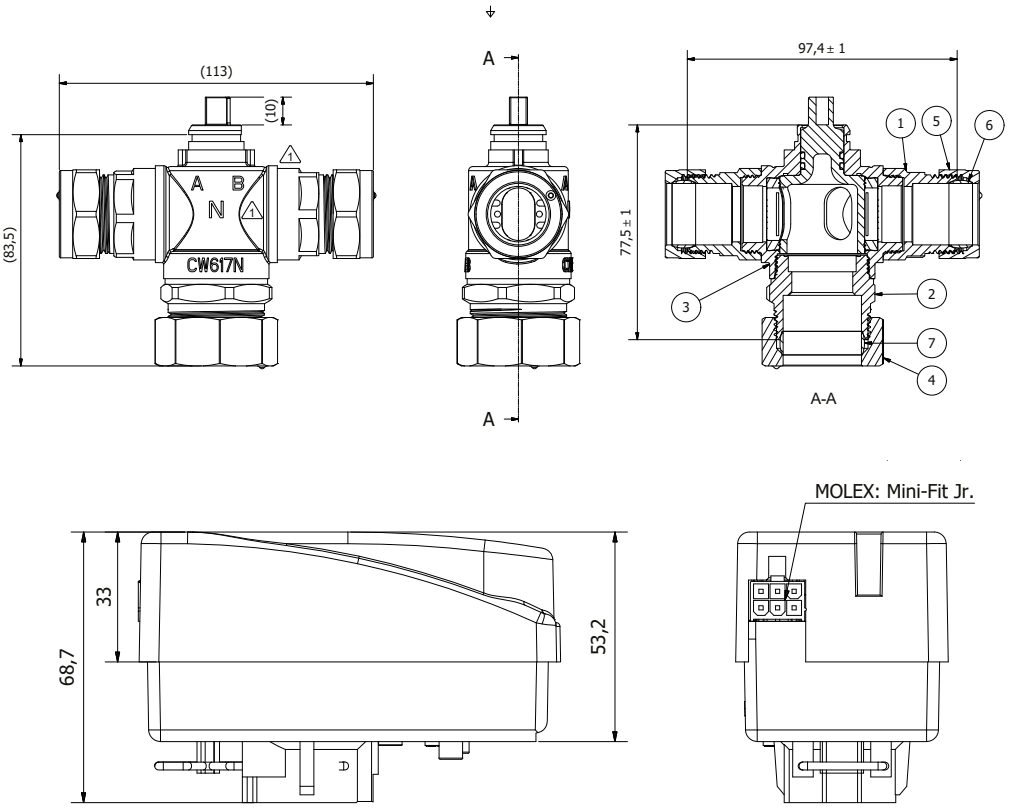

Component	Description
Circulation pump (GP12)	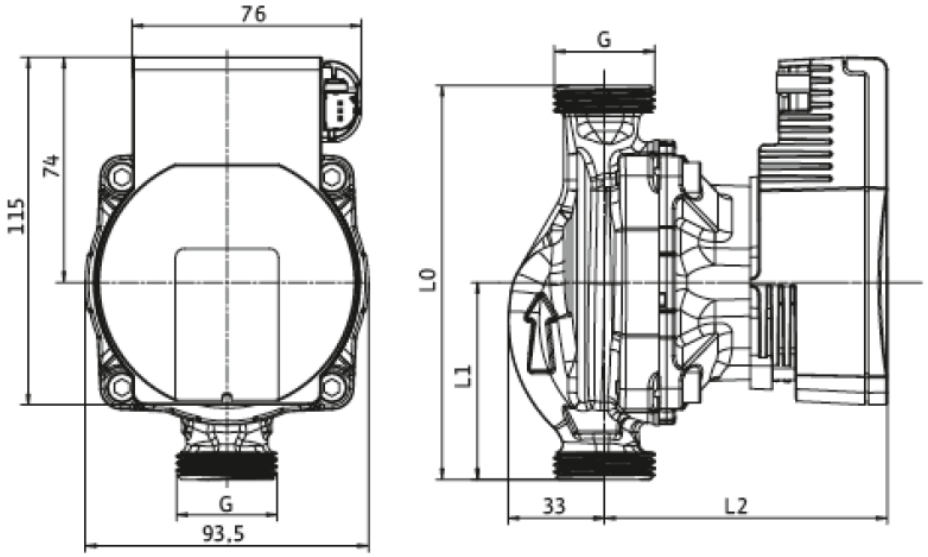 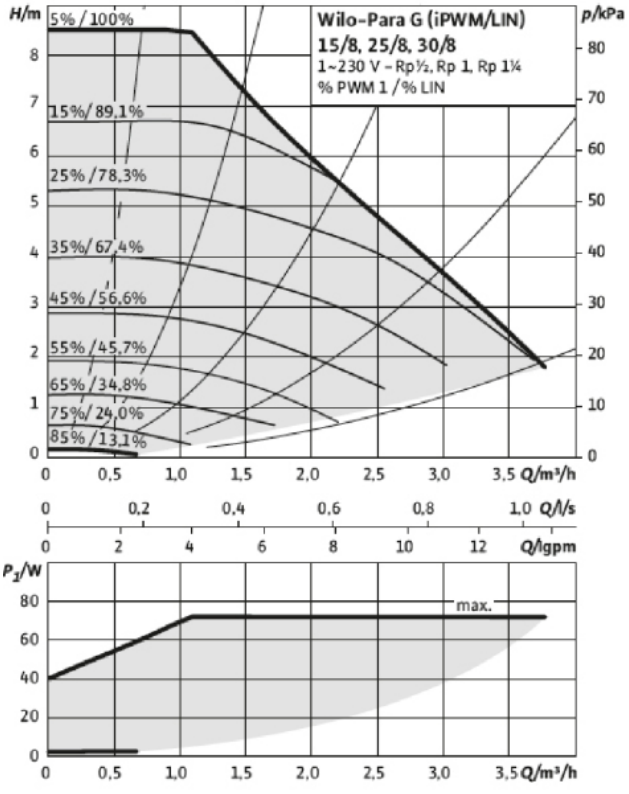

Component	Description
Titanium anode*	Anode length: 220mm 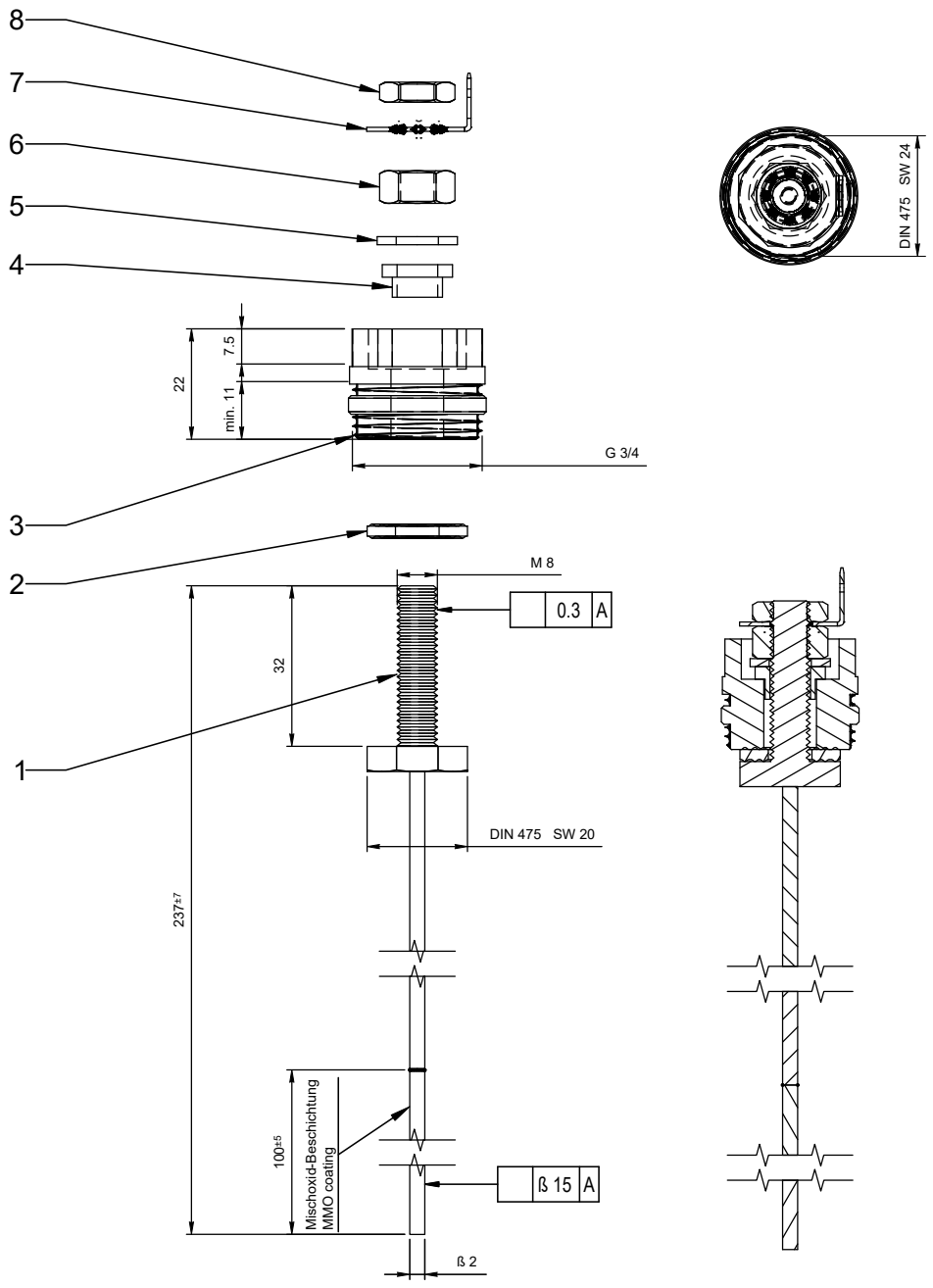

* Only in BA-SVM 10-200/6, BA-SVM 10-200/12, BA-SVM 10-200/6 E EM and BA-SVM 10-200/12 E EM.

Sensors

Data temperature sensor

Temperature (°C)	Resistance (kOhm)	Voltage (VDC)
-40	351.0	3.256
-35	251.6	3.240
-30	182.5	3.218
-25	133.8	3.189
-20	99.22	3.150
-15	74.32	3.105
-10	56.20	3.047
-5	42.89	2.976
0	33.02	2.889
5	25.61	2.789
10	20.02	2.673
15	15.77	2.541
20	12.51	2.399
25	10.00	2.245
30	8.045	2.083
35	6.514	1.916
40	5.306	1.752
45	4.348	1.587
50	3.583	1.426
55	2.968	1.278
60	2.467	1.136
65	2.068	1.007
70	1.739	0.891
75	1.469	0.758
80	1.246	0.691
85	1.061	0.607
90	0.908	0.533
95	0.779	0.469
100	0.672	0.414

Electronics

Main board (AA2)

LED	Indication
Power: Green	A steady light means that 12 V is OK.
Run: Green	Flashing once/sec. Indicates that the processor is OK.
Com: Green	Flashes irregularly during communication.
PWM1: Orange	Continuous light during active output.
PWM2: Orange	Continuous light during active output.
K1 - K4: Orange	A steady light means that the relevant relay is engaged.

Outputs

Output	Function
K1	Reversing valve (QN10).
K2	Charge pump (GP12).
K3	Circulation pump (GP10).
K4	Reversing valve (QN12).

Inputs

Input	Function
AUX5	External supply temperature sensor (EQBT25 / BT64).
AUX6	Temperature sensor, heating medium supply after immersion heater (BT63).

Input circuit board (AA3)

Inputs

Input	Function
AA3-X4-1	Current sensor (GND).
AA3-X4-2	Current sensor (BE1).
AA3-X4-3	Current sensor (BE2).
AA3-X4-4	Current sensor (BE3).
AA3-X6-1	Temperature sensor, outdoor (BT1).
AA3-X6-3	Temperature sensor, room (BT50).
AA3-X6-5	Temperature sensor, heating medium, supply (BT25).
AA3-X6-7	Temperature sensor, hot water, charging (BT6)
AA3-X6-9	AUX 1
AA3-X6-11	AUX 2
AA3-X6-13	AUX 3
AA3-X6-15	Temperature sensor, hot water, top (BT7)
AA3-X6-17	Temperature sensor, heating medium, return (BT71).

Outputs

Output		Function
X7:1	K1	Potential free relay Common
X7:2	K1	Potential free relay NO
X7:3	K1	Potential free relay NC

Accesory board (AA23)

Inputs

Input	Function
AA23-X1-1	Option, RCBO for KVR KIT
AA23-X1-6	Option, KVR KIT
AA23-X4-4	Option, next accersory card (AA5)
AA23-XJ4	Pressure sensor, high pressure (BP4).
AA3-XJ15	Temperature sensor, liquid line (BT15).
AA3-XJ12	Temperature sensor, condenser out (BT12).
AA3-XJ13	Temperature sensor heating medium return (BT3).

Relay board (AA7)

Outputs

Output	Function
AA7-X2-2	Contactor for immersion heater (K1A)
AA7-X2-4	Contactor for immersion heater (K2A)
AA7-X2-6	Contactor for immersion heater (K3A)

Titanium anode board (AA8)

(Does not apply to BA-SVM 10-200/6/12 R)

Inputs

Input	Function
AA8-X1	Power supply from X1
AA8-X2	Titanium anode
AA8-X3	Indicator light

Relay board (AA27)

Inputs

Input	Function
AA27-X1	Alarm relay

Display unit (AA4)

The display unit consists of:

- a colour screen where all information is displayed.
- a status lamp.
- navigation buttons (OK button, Back button and Control knob).
- a USB socket.
- a service socket.

Status lamp	Function
Lights green	Normal function
Lights yellow	Emergency mode activated
Lights red	Alarm tripped

7 Troubleshooting

Alarm list

A-alarm

In event of an A alarm the red lamp on the front lights and an alarm icon is displayed. First go through the suggested actions shown in the display.

Alarm no.	Alarm text on the display	Cause	Heat pump action.	May be due to
1	Sensor fault BT1	Sensor not connected/defective (outdoor sensor)	Calculated flow temperature is set to min supply line (menu 1.9.3).	See troubleshooting page 26.
2	Sensor fault BT2	Sensor not connected/defective (heating medium supply)	Uses BT3 if available. If BT3 is not available, BT63 is used.	See troubleshooting page 27.
3	Sensor fault BT3	Sensor not connected/defective (heating medium return)	No action	See troubleshooting page 27.
6	Sensor fault BT6	Sensor not connected/defective (hot water, controlling)	Uses BT54	See troubleshooting page 27.
25	Sensor fault BT25	Sensor not connected/defective (heating medium flow, external)	Automatic reset.	See troubleshooting page 26.
31	Sensor fault BT63	Sensor not connected/defective	Blocks internal electrical addition.	See troubleshooting page 27.
33	Sensor fault EP30- BT53	Sensor not connected/defective (solar panel)	Switches off solar function.	See troubleshooting page 28.
34	Sensor fault EP30- BT54	Sensor not connected/defective (solar coil)	Switches off solar function.	See troubleshooting page 28.
35	Sensor fault EM1- BT52	Sensor not connected/defective (boiler)	Shunt closes. Burner stops.	See troubleshooting page 28.
36	Sensor fault EP21- BT2	Sensor not connected/defective (supply temperature sensor, extra climate system 1)	Controls the return sensor (EP21-BT3)	See troubleshooting page 28.
37	Sensor fault EP22- BT2	Sensor not connected/defective (supply temperature sensor, extra climate system 2)	Controls the return sensor (EP22-BT3)	See troubleshooting page 28.
38	Sensor fault EP23- BT2	Sensor not connected/defective (supply temperature sensor, extra climate system 3)	Controls the return sensor (EP23-BT3)	See troubleshooting page 28.

Alarm no.	Alarm text on the display	Cause	Heat pump action.	May be due to
39	Sensor fault EQ1–BT64	Sensor BT64 not connected, defective.	Shuts off cooling, Closes shunt (QN18) for cooling.	See troubleshooting page 28.
52	The temperature limiter has tripped	Temperature limiter has tripped	Internal electrical addition is blocked.	
56	Incorrect serialnumber	Serial number and program do not match	The compressor stops, all relay outputs are set to 0 V	Check serial number
57	Incorrect program	Serial number and program do not match	Compressor blocked. All relay outputs are set to 0 V.	
70	Communication fault with PCA input EB15	Communication with the input card missing for 60 secs.	Blocking the relevant compressor. Calculated flow temperature is set to min supply line.	See troubleshooting on page 29.
71	Communication fault with PCA base-AA2	Communication with the base card missing for 15 secs.	Compressor (EB101) blocked.	See troubleshooting on page 30
73-95	Existing communication fault with "accessory".	Communication with the accessory card missing for 15 secs.	Accessory is blocked.	• Check communication cables • Check the setting of the dipswitch.
96-99	Existing communication fault with "room unit".	Communication with room unit zone 1-4 missing for 60 secs.	Accessory is blocked.	• Check communication cables
206	Com. error Acc-QZ1	Temporary communication fault HW comfort.	Accessory blocked.	• Check fuses, voltages to the accessory card. • Check that the communication cables are correctly connected. • Check the setting of the dipswitch.
220	High pressure alarm.	See relevant manual.	Compressor blocked.	See relevant manual.
221	Low pressure alarm.	See relevant manual.	Compressor blocked.	See relevant manual.
222	Motor protection alarm.	See relevant manual.	Compressor blocked.	See relevant manual.
223	comm.error from heatpump	See relevant manual.	Compressor blocked.	See relevant manual.
224	Fan alarm.	See relevant manual.	Compressor blocked.	See relevant manual.
225	supply/return temp sensors mixed up.	See relevant manual.	Compressor blocked.	See relevant manual.
227	Sensor fault.	See relevant manual.	Compressor blocked.	See relevant manual.
228	Defrosting fault.	See relevant manual.	Compressor blocked.	See relevant manual.
229	Short operating time.	See relevant manual.	Compressor blocked.	See relevant manual.

Alarm no.	Alarm text on the display	Cause	Heat pump action.	May be due to
230	Hot gas alarm.	See relevant manual.	Compressor blocked.	See relevant manual.
231	Phase sequence fault.	See relevant manual.	Compressor blocked.	See relevant manual.
232	Low evaporation	See relevant manual.	Compressor blocked.	See relevant manual.
251	Communication fault ACC Modbus40.	Communication with the accessory card missing for 15 secs.	Accessory is blocked.	See IHB Modbus40 for fault tracing.
261	This alarm is generated by the heat pump	High VVX temp (E35).	Compressor blocked.	See relevant manual.
262	This alarm is generated by the heat pump	Inverter fault, high temperature.	Compressor blocked.	See relevant manual.
263	This alarm is generated by the heat pump	Inverter error, high current (E47).	Compressor blocked.	See relevant manual.
264	This alarm is generated by the heat pump	Inverter error, com (E45).	Compressor blocked.	See relevant manual.
265	This alarm is generated by the heat pump	Inverter fault, pcb (E46)	Compressor blocked.	See relevant manual.
266	This alarm is generated by the heat pump	Low refrigerant amount (E57)	Compressor blocked.	See relevant manual.
267	This alarm is generated by the heat pump	Inverter error, start error (E59)	Compressor blocked.	See relevant manual.
268	This alarm is generated by the heat pump	Inverter fault, conv	Compressor blocked.	See relevant manual.
277	This alarm is generated by the heat pump	Sensor fault heatex-changer, (E37)	Compressor blocked.	See relevant manual.
278	This alarm is generated by the heat pump	Sensor fault ambient air, (E38)	Compressor blocked.	See relevant manual.
279	This alarm is generated by the heat pump	Sensor fault discharge, (E39)	Compressor blocked.	See relevant manual.
280	This alarm is generated by the heat pump	Sensor fault suction, (E53)	Compressor blocked.	See relevant manual.

Alarm no.	Alarm text on the display	Cause	Heat pump action.	May be due to
281	This alarm is generated by the heat pump	Sensor fault LP, (E54)	Compressor blocked.	See relevant manual.
283	Com. error Acc. –EQ1	Temporary Comm. Fault Active 4-pipe cooling ULVP	Accessory is blocked.	• Check communication cables • Check settings of the dipswitch
296	Non-compatible air-water heat pump.	If the outdoor unit connected BA-SVM 10-200 is something other than AMS-10.	Hot water is blocked.	See cause.
301	Perm. comm. to a slave unit-EB102	Communication with the slave missing for 15 secs.	Master blocks relevant compressor. The compressors are stopped on the slave.	Check communication cables.
403	Sensor fault on EB101	Sensor fault detected on the slave Off Com-interface	Compressor blocked.	See relevant manual.
404	Sensor fault on EB101	Sensor fault detected on the slave Off Com-interface	Compressor blocked.	See relevant manual.
412	Sensor fault on EB101-BT12	Sensor fault detected on the slave Off Com-interface	Compressor blocked.	See relevant manual.
415	Sensor fault on EB101-BT15	Sensor fault detected on the slave Off Com-interface	Compressor blocked.	See relevant manual.

B alarm

In the event of a B alarm the green light lights up on the front and a symbol with a service technician is displayed in the information window until the alarm is reset. All alarms are automatically reset if the cause is rectified.

Alarm no.	Alarm text on the display	Cause	Action.	May be due to
101	Sensor fault BT1			Alarm 101-120. See A-alarm 1-20.
103	Sensor fault BT3			
106	Sensor fault BT6			
107	Sensor fault BT7	Sensor temporarily missing	Replace display of BT7 temperature with "––"	Resets automatically when the sensor has worked continuously for 60 s.
145	Incorrect phase sequence or missing phase has been detected. The compressor is blocked	Temporary problem with the communication from base card to motor protection	-	Suggestion: Cables/ cards may need checking eventually.
151	sensor fault – CL11- BT51	Resets automatically when the sensor has worked continuously for 60 s.	Pool pump stops.	Sensor BT51 not connected, defective.
162	High condenser out			The temperature of BT12 has exceeded 59 °C. The alarm is reset when the Temperature has dropped below 59 °C and condenser return (BT3) has dropped 2K since the alarm.
163	High condenser in			The return temperature (BT3) has exceeded 58 °C. It is reset when the temperature has dropped to 56 °C.
166	Electrical anode incorrect	Electrical anode fault		Suggestion: Check electrical anode, circuit board at the electrical anode as well as cables to the electrical anode.
170	Com. error input card			Temporary communication fault. See alarm 70.
171	Com. error base card			Temporary communication fault. See alarm 71.
173	Com. error heating system2			Temporary communication fault. See alarm 73.
174	Com. error heating system3			Temporary communication fault. See alarm 74.
176	Com. error heating system4			Temporary communication fault. See alarm 76.

Alarm no.	Alarm text on the display	Cause	Action.	May be due to
177	Com. error Acc. –EM1	Temporary communication fault to accessory card with shunt controlled additional heat.	Accessory blocked.	Connections, Cables and cards may eventually need checking.
178	Com. error Acc. –CI11	3 communication errors in succession have occurred on the pool accessory card	Block accessory	• Check the Communication cables. • Check settings of the dipswitch
180	Freeze prot			Activates if the heating is blocked and the outdoor temperature (BT1) falls below 3 °C. Heating is permitted and controlled by min. supply.
181	Unsuccessful periodic increase			Periodic increase has failed to reach stop temp. within 5 hours.
182	Load monitor activated			One or more power steps blocked due to high current measured on current sensor.
183	Defrosting			Defrosting in progress.
196	Comm. room unit, zone 1			Temporary communication fault. See alarm 96.
197	Comm. room unit, zone 2			Temporary communication fault. See alarm 97.
198	Comm. room unit, zone 3			Temporary communication fault. See alarm 98.
199	Comm. room unit, zone 4			Temporary communication fault. See alarm 99.
271	Cold outdoor air EB 101	EB 101 sends an error message to the control		See relevant manual
272	Hot outdoor air EB 101	EB 101 sends an error message to the control		See relevant manual
273	HW-start and HW-stop have reset to default	Adjustment of the hot water-settings due to short run times		See relevant manual
274	The compressor's phase has been overloaded	Load monitor has caused the compressor not to run at the desired frequency	None	Load monitor has prevented compressor running at desired frequency (AMS 10 additional heat: and been below 85Hz) for at least an hour (corresponding)

Alarm no.	Alarm text on the display	Cause	Action.	May be due to
275	The compressor's phase has been overloaded for a long time	Load monitor has caused the compressor not to run at the desired frequency	None	Load monitor has prevented compressor running at desired frequency (AMS 10 additional heat: and been below 85Hz) for longer than 5% of the total operating time for the compressor. This first detects the total number of operating hours by which the compressor exceeds 1000h.
282	Com. error Acc. –EQ1	3 communication errors in succession have occurred on the accessory card.	Accessory is blocked	Temporary communication fault
323	Sensor fault EQ1-BT25.	Resets automatically when the sensor has worked continuously for 60 s.	Cooling DM calculated with EQ1-BT25 set to 0.	Sensor EQ1-BT25 not connected, defective.
354	Slave EB101: Delta BT2-BT3>|2K| during calibration. Resets to manual circulation pump speed	Delta BT3-BT12 greater than |2K| after calibration	Change from auto to manual pump speed	Uncertain sensor accuracy
355	Slave EB101: Delta BT3-BT63>|2K| during calibration. Resets to manual circulation pump speed	Delta BT3-BT2 greater than |2K| after calibration	Change from auto to manual pump speed	Uncertain sensor accuracy
995	Alarm from external input	External alarm	None	Status AUX-in
996	Additional heat external blocked	Signal via AUX input	None	Status AUX-in
997	The compressor is externally blocked	The compressor is externally blocked	None	Status AUX-in
998	Starts	Display has restarted	The display/product has restarted	The display/product has restarted

Troubleshooting guide

Alarm 1- sensor fault

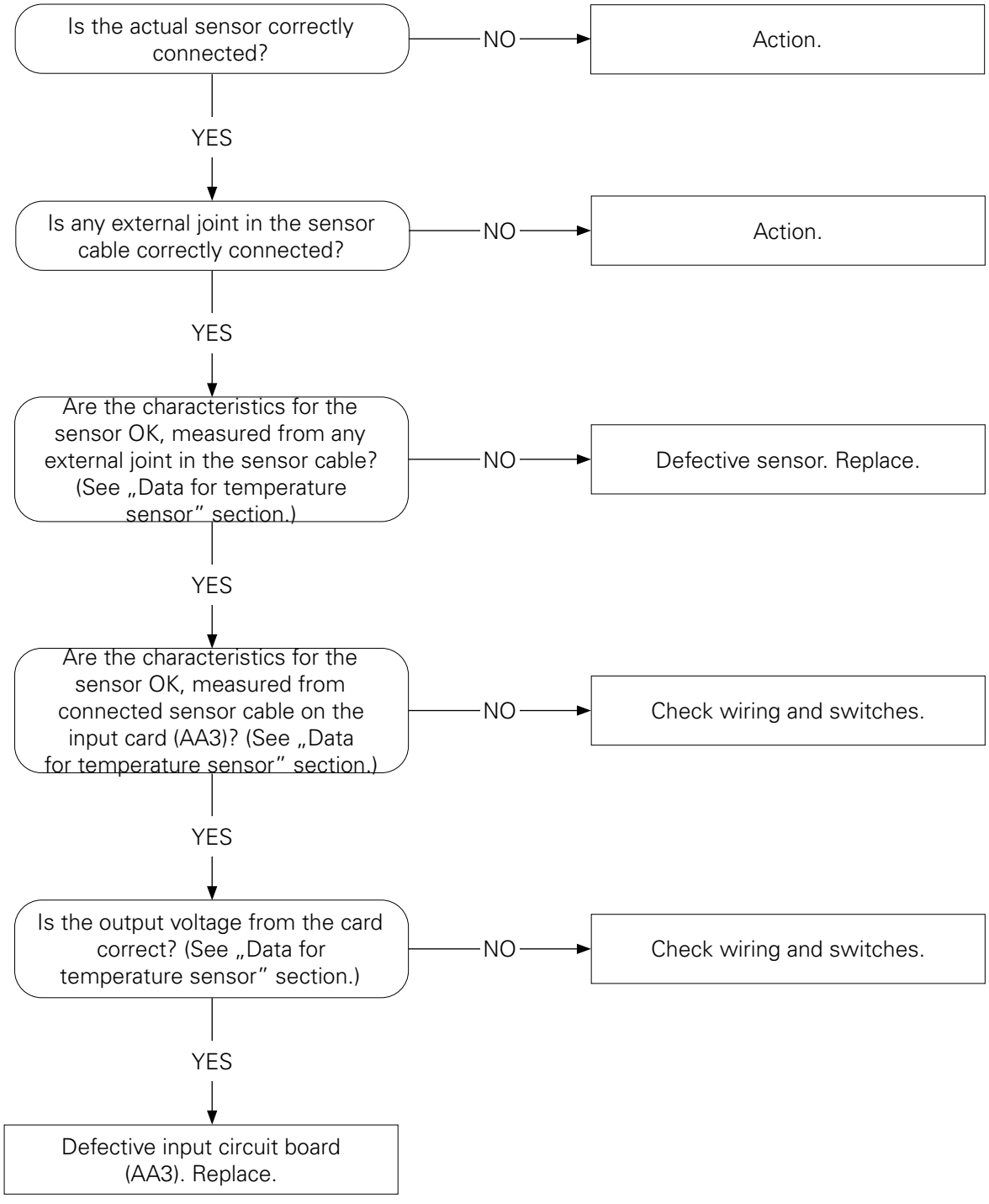

Alarm 2, 3, 6, 31 - sensor fault

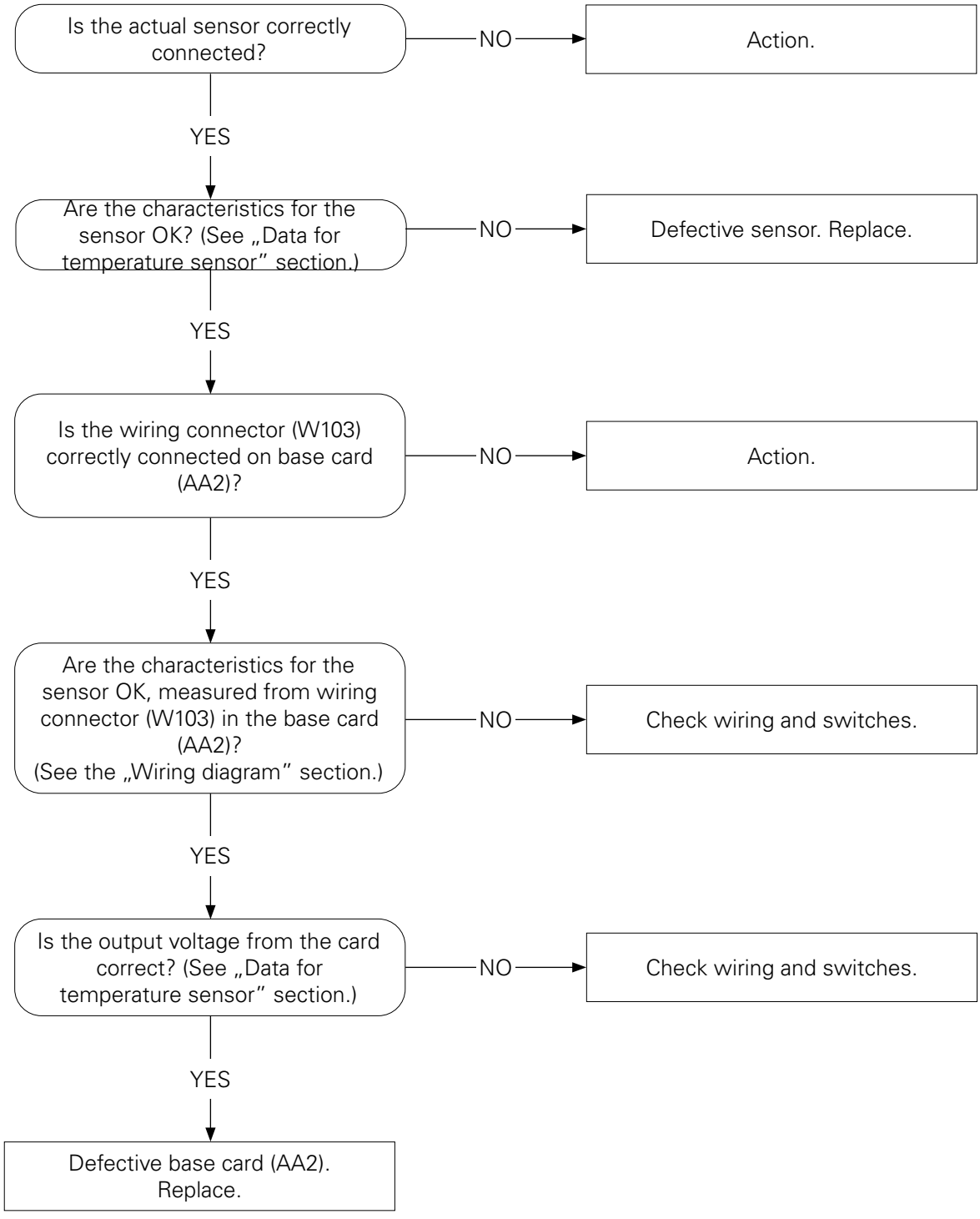

Alarm 33-38 – sensor fault

Fault-tracing in accessory card.

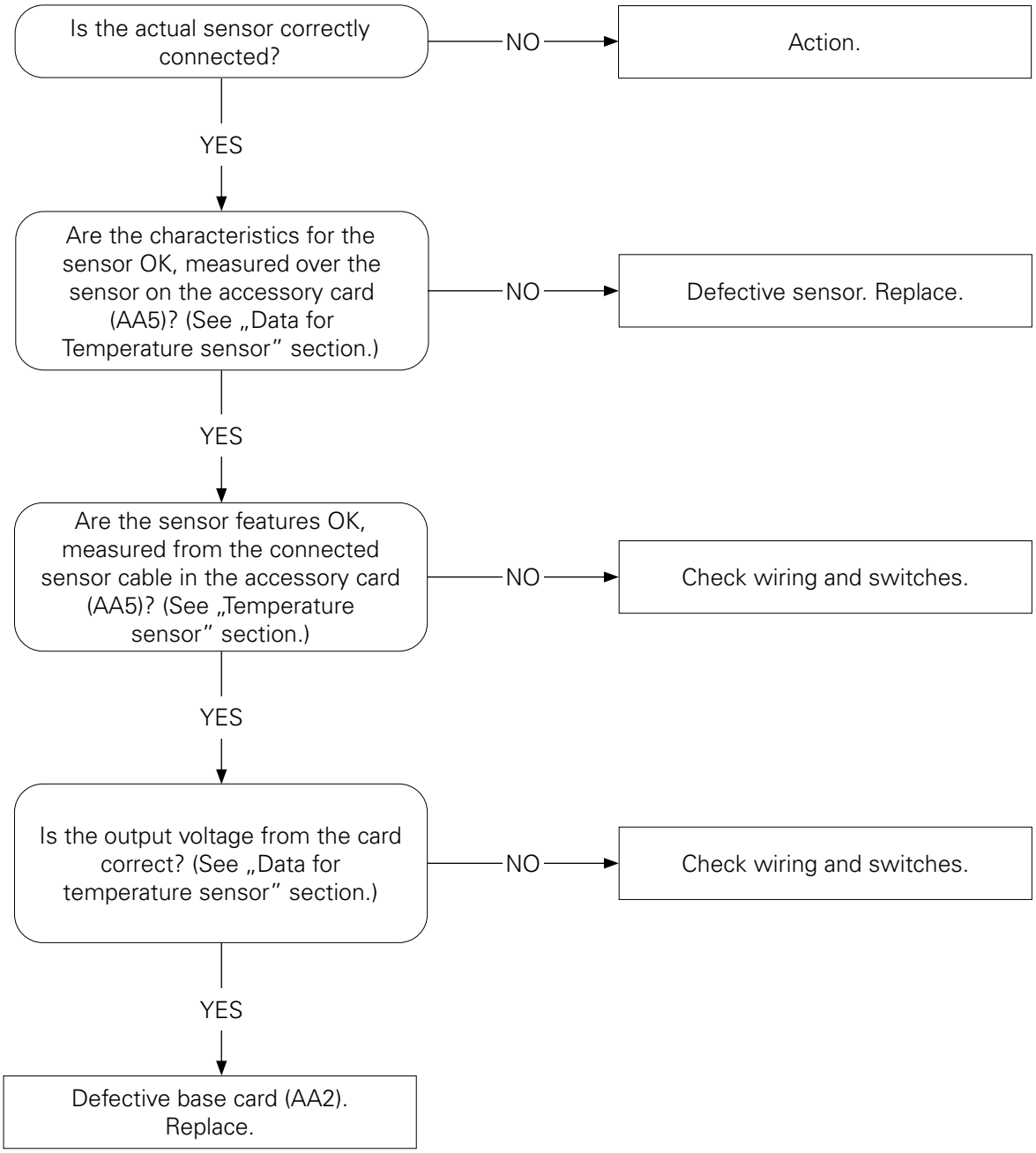

Alarm 70- perm. com.error input card

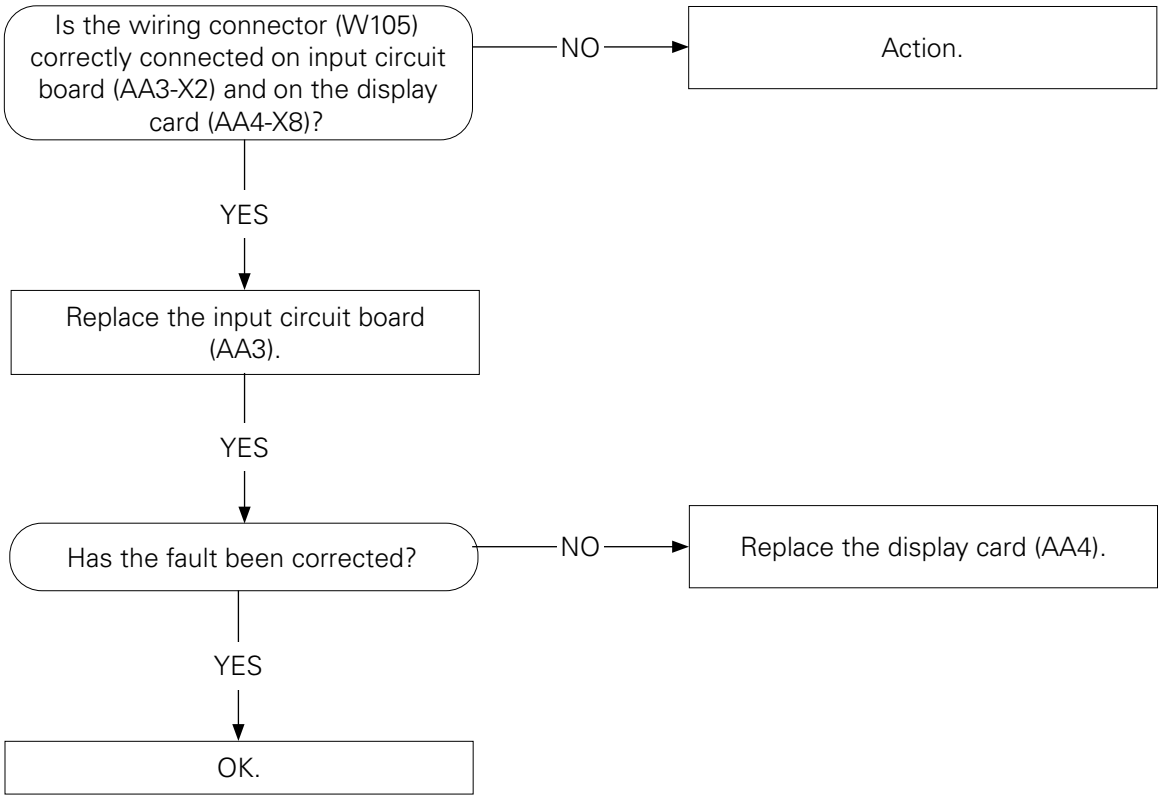

Alarm 71 - perm. com.error input card

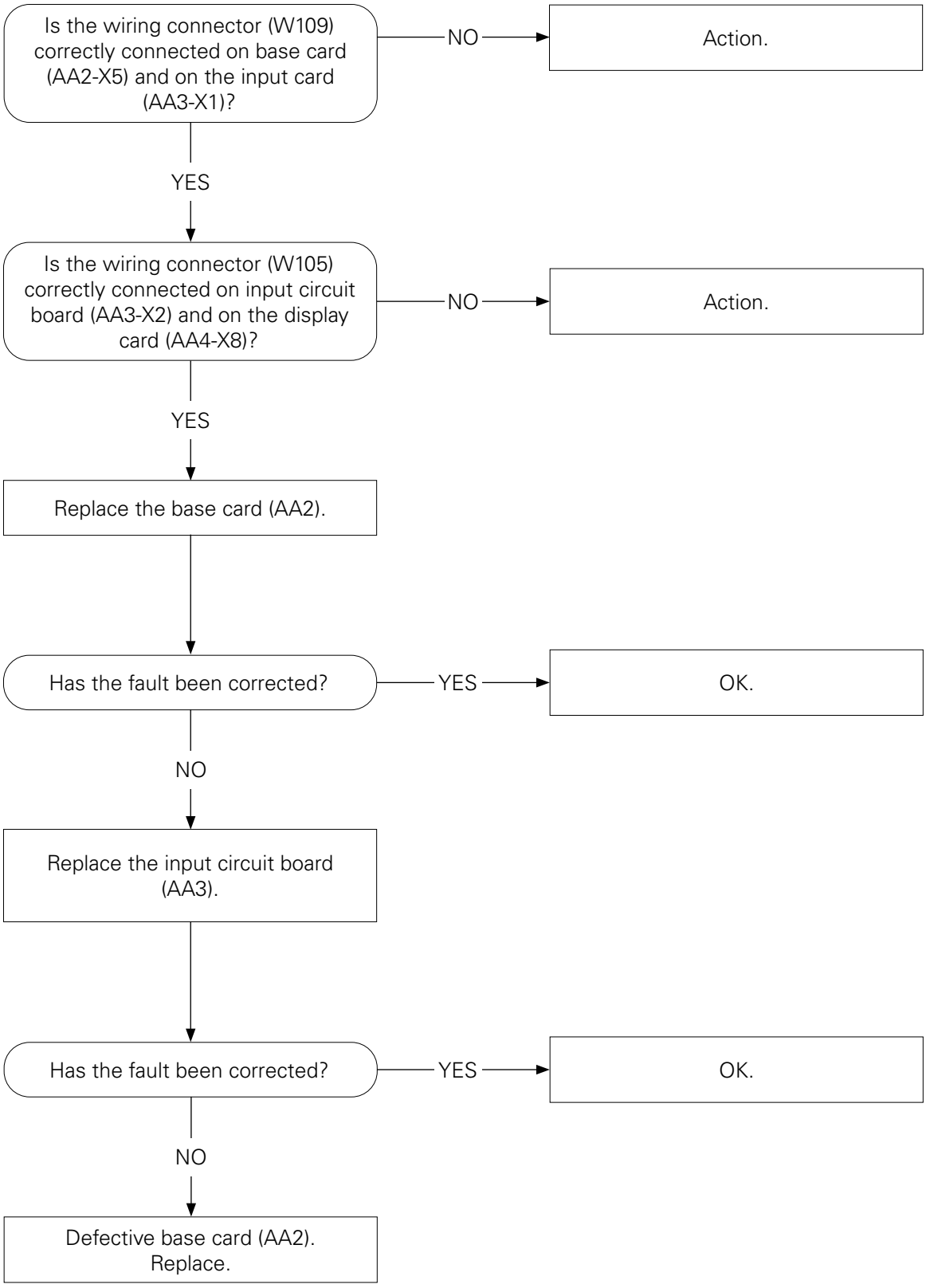

Function check, components

Relay test- forced control

The heat pumps relay outputs can be force controlled from menu 5.6.

1. Tick „activated". Forced control is then activated for 10 minutes.
2. Tick the outputs that you want to activate.
3. Check the relay/component function.

> *CAUTION*
> Forced control must only be used by users familiar with the system. When forced control is activated, the alarm functions are disabled.

Internal outputs

Output	Function
AA2-K1	Reversing valve (QN10).
AA2-K2	Charge pump (GP12).
AA2-K3	Circulation pump (GP10).
AA2-K4	Reversing valve (QN12).
AA7-X2-2	Contactor for immersion heater (K1A)
AA7-X2-4	Contactor for immersion heater (K2A)
AA7-X2-6	Contactor for immersion heater (K3A)
AA27-X1	Alarm relay

Climate system 2 (ECS 40/ECS 41)

Output	Function
EB21-AA5-K2	Mixing valve, close
EB21-AA5-K3	Mixing valve, open
EB21-AA5-K4	External circulation pump

Climate system 3 (ECS 40/ECS 41)

Output	Function
EB22-AA5-K2	Mixing valve, close
EB22-AA5-K3	Mixing valve, open
EB22-AA5-K4	External circulation pump

Climate system 4 (ECS 40/ECS 41)

Output	Function
EB23-AA5-K2	Mixing valve, close
EB23-AA5-K3	Mixing valve, open
EB23-AA5-K4	External circulation pump

8 Component replacement

Removing the covers

FRONT COVER
1. Remove the screws from the lower edge of the front cover.
2. Tilt back the cover at the lower edge paying special attention not to damage the connecting cables, then remove the front cover by lifting it upwards.
3. Disconnect the PE protective conductor connecting the front cover to the unit.

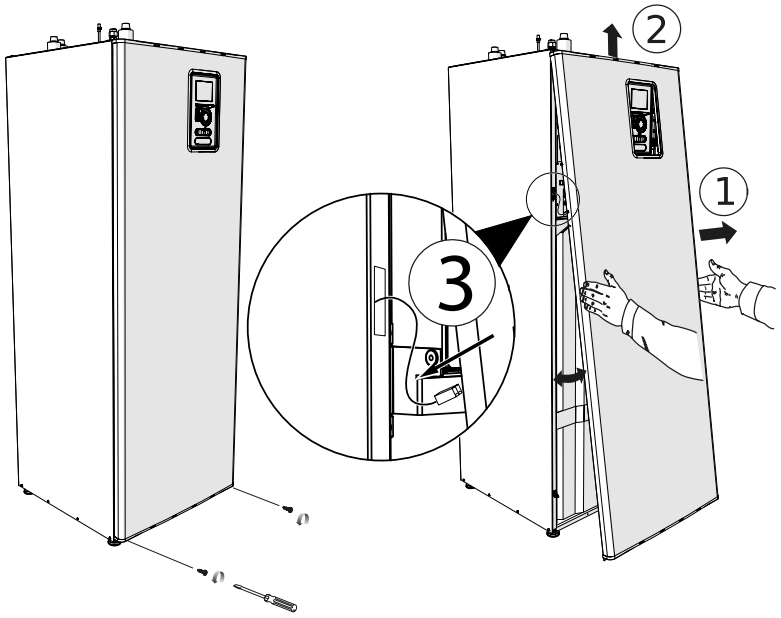

CAUTION
When mounting front cover, remeber to connect the PE protective conductor back to the unit.

Accessibility, electrical connection

After removing the front cover, you gain access to all electrical connections.

CABLE LOCK
Use a suitable tool to release/lock cables in the indoor module terminal blocks.

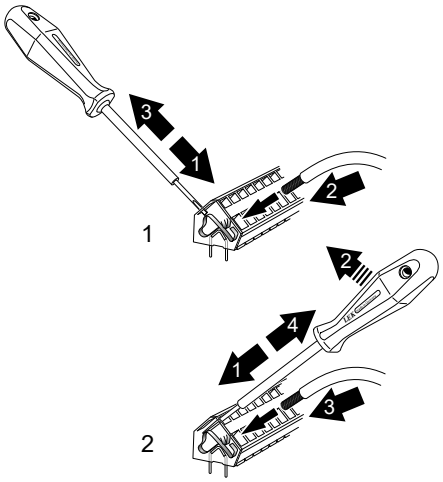

Main components

Replacement of immersion heater

1. Set the switch (SF2) to "stand by" mode and wait approx. 30 secs	
2. Cut the power supply to BA-SVM 10-200 and EB1.	
3. Close the shut-off valves to the heating system and EB1	
4. Drain the water by connecting a hose to the filling valve in the system first.	
5. Connect a hose to the system's external draining valve, then open the draining valve in order to drain the heating installation.	
6. Remove the front cover using a screwdriver.	
7. Remove the mounting screw of the control panel.	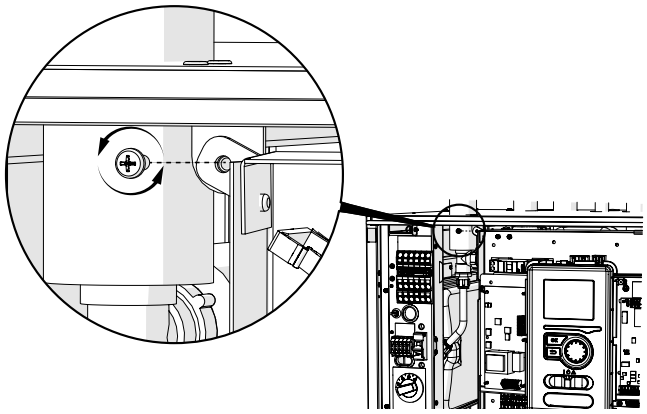
8. Slide the control box to the right to access the hydraulic connections.	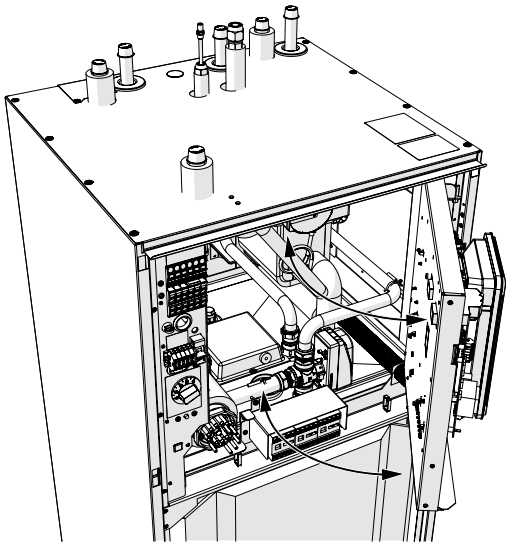

9. Disconnect electrical connection cables from the immersion heater connectors.	
10. Disconnect the immersion heater EB1 at the marked couplings. Note. Approximately 2 litres of water will run out to the drip tray.	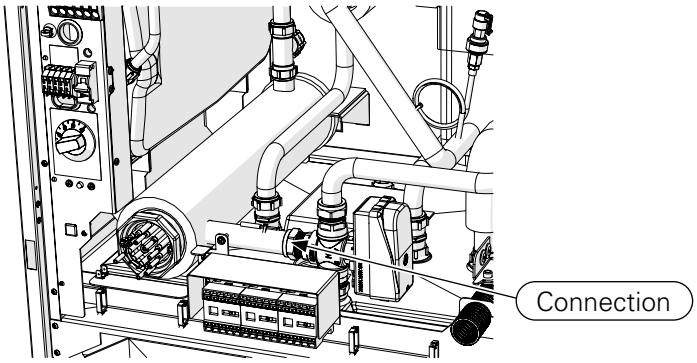
11. Remove the immersion heater EB1.	
Note. In case, replacement of the complete immersion heater EB1 is not required, follow the steps below to dismantle the heating element itself. 12. Place the disassembled complete immersion heater in a vise.	
13. Unscrew the heating element from the immersion heater. Note. Each time the heating element is replaced, the gasket should also be replaced.	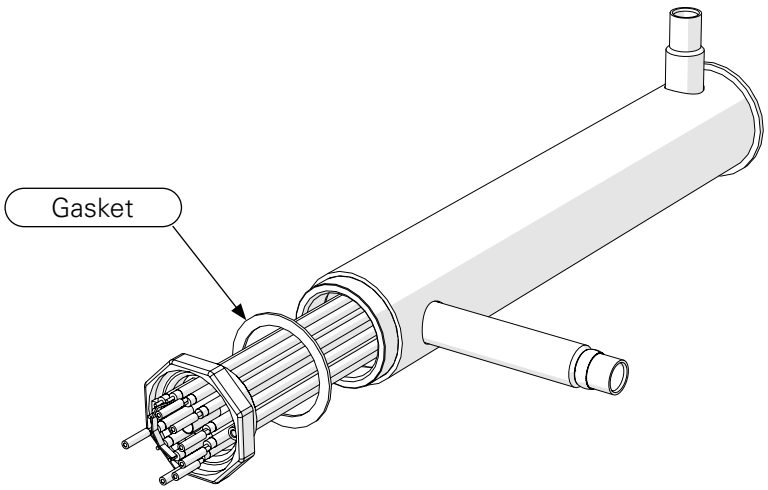
14. Mount new heater , replace gasket if needed.	
15. Reassemble in reverse order.	

Replacing the circulation pump GP12

1. Set the switch (SF2) to "stand by" mode and wait approx. 30 secs	
2. Cut the power supply to BA-SVM 10-200 and EB1.	
3. Close the shut-off valves to the heating system and EB1	
4. Drain the water by connecting a hose to the filling valve in the system first.	
5. Connect a hose to the system's external draining valve, then open the draining valve in order to drain the heating installation.	
6. Remove the front cover using a screwdriver.	
7. Remove the mounting screw of the control panel.	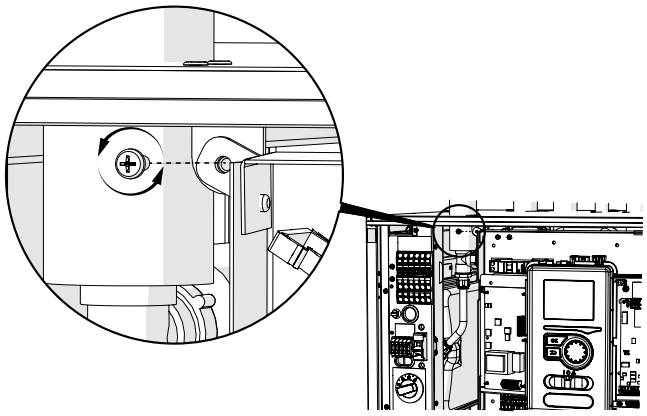
8. Slide the control box to the right to access the hydraulic connections.	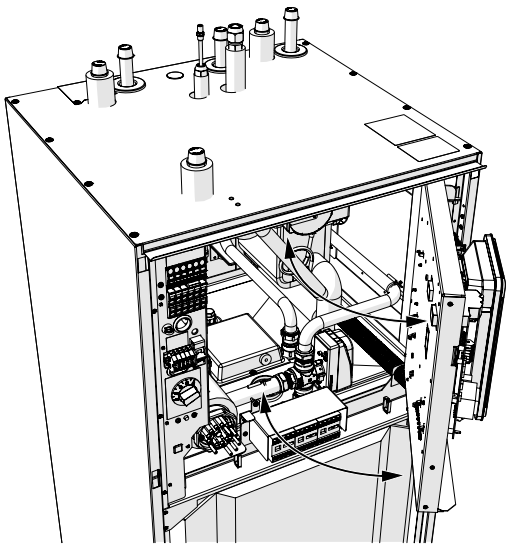

9. Disconnect the connectors.	
10. Disconnect the connections on the circulation pump GP12.	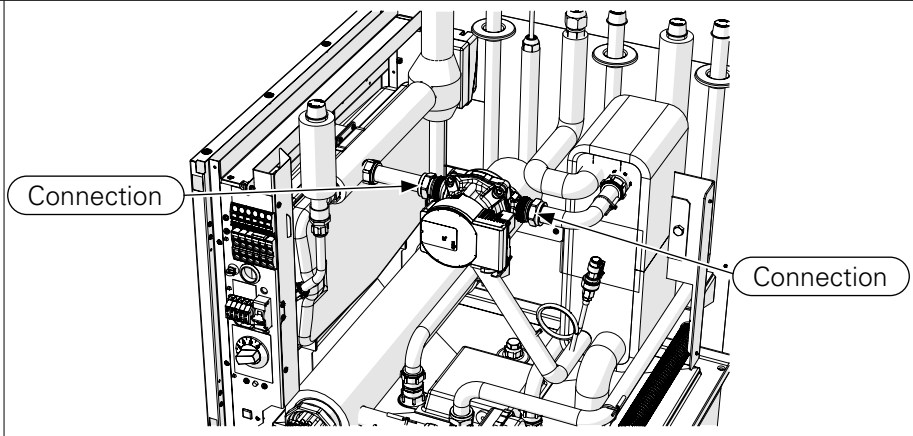
11. Reassemble new circulation pump in reverse order.	

Replacement of reversing valve QN10

1. Set the switch (SF2) to "stand by" mode and wait approx. 30 secs	
2. Cut the power supply to BA-SVM 10-200 and EB1.	
3. Close the shut-off valves to the heating system and EB1	
4. Drain the water by connecting a hose to the filling valve in the system first.	
5. Connect a hose to the system's external draining valve, then open the draining valve in order to drain the heating installation.	
6. Remove the front cover using a screwdriver.	
7. Remove the mounting screw of the control panel.	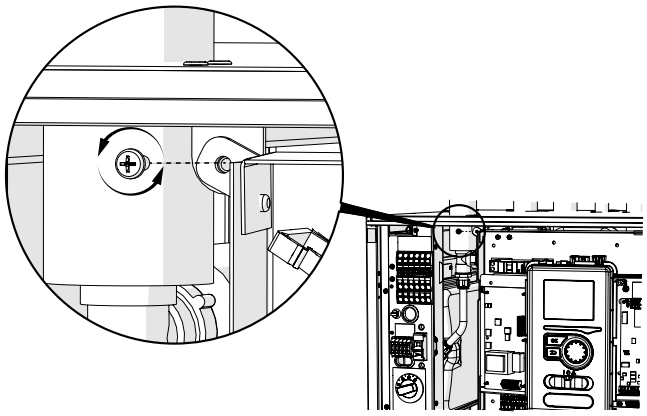
8. Slide the control box to the right to access the hydraulic connections.	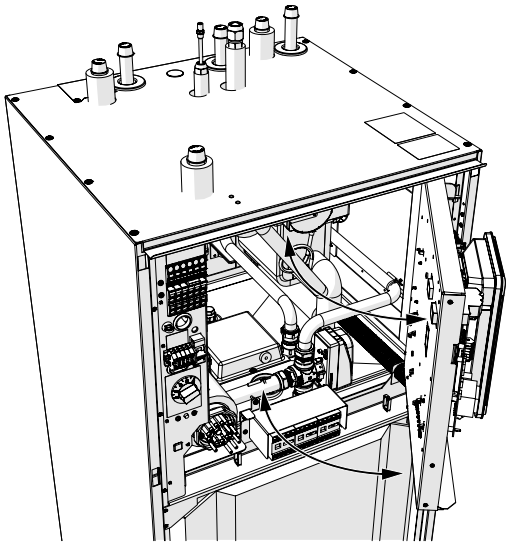

9. Disconnect the power cord from the actuator.

10. Remove the pin and remove the actuator.

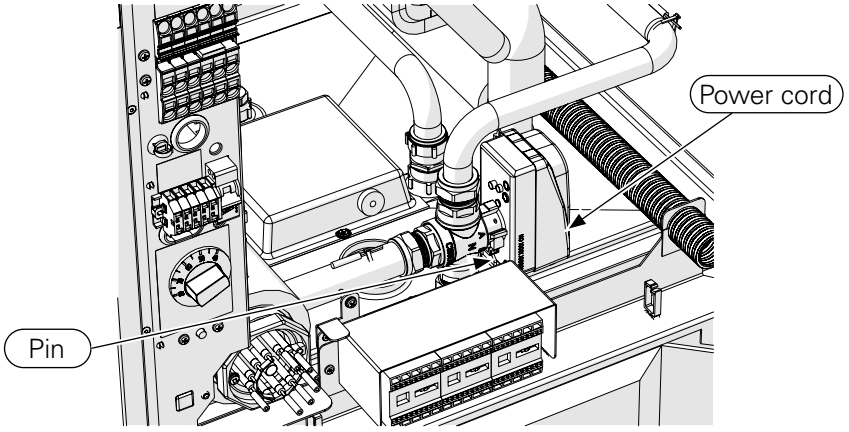

11. Disconnect the connections.

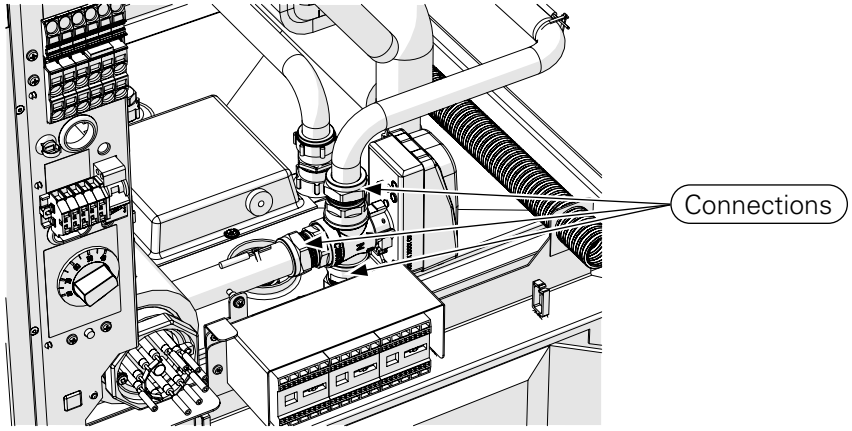

Replacement of reversing valve QN10

1. Set the switch (SF2) to "stand by" mode and wait approx. 30 secs	
2. Cut the power supply to BA-SVM 10-200 and EB1.	
3. Close the shut-off valves to the heating system and EB1	
4. Drain the water by connecting a hose to the filling valve in the system first.	
5. Connect a hose to the system's external draining valve, then open the draining valve in order to drain the heating installation.	
6. Remove the front cover using a screwdriver.	
7. Remove the mounting screw of the back QN12 cover plate. 8. Remove covering plate.	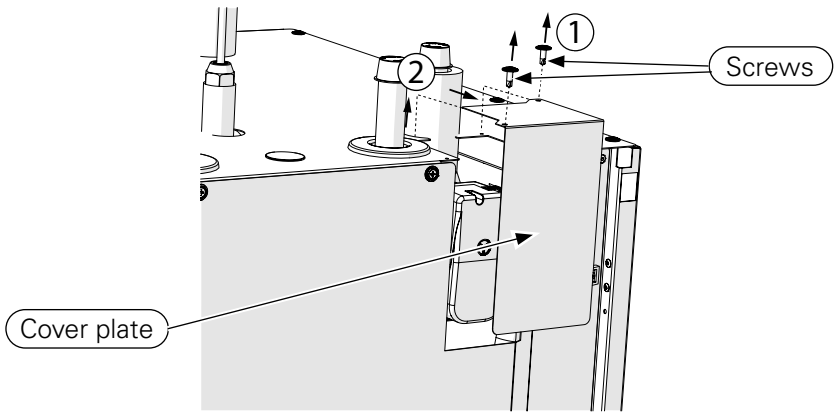
9. Disconnect the power cord from the actuator. 10. Remove the pin and remove the actuator.	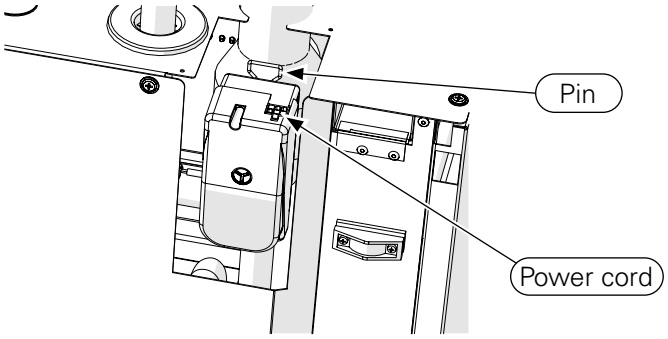
11. Disconnect the connections.	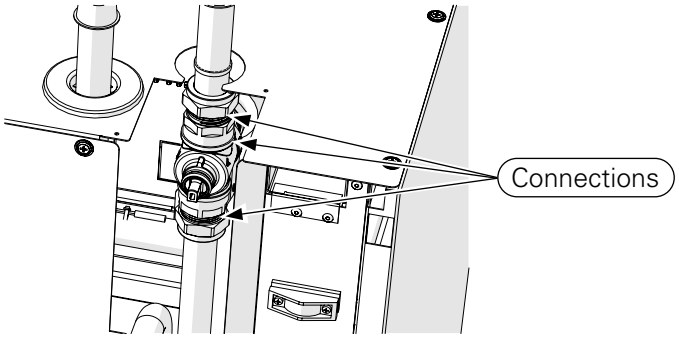

Circuit board and electronics

CAUTION
Cut all power to the product prior to carrying out work on the circuit board and electrical components.

CAUTION
During all the work on circuit boards and electronics ensure that the components are not damaged by electro static discharge (ESD).

Replacement of Main board (AA2)

1. Set the switch (SF2) to "off" mode.	
2. Cut the power supply to BA-SVM 10-200 and EB1.	
3. Remove the front cover using a screwdriver.	
4. Remove the control panel wing screws.	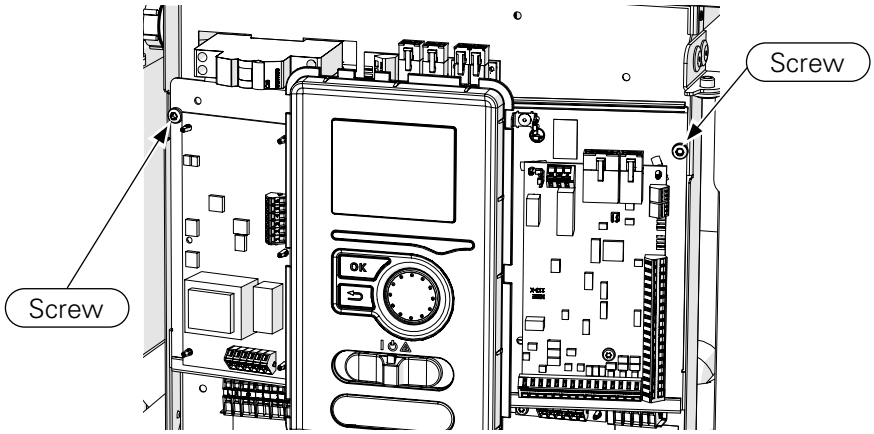
5. Lean the control panel wing downwards.	
4. Remove the connect cables.	
5. Remove the screw and pins.	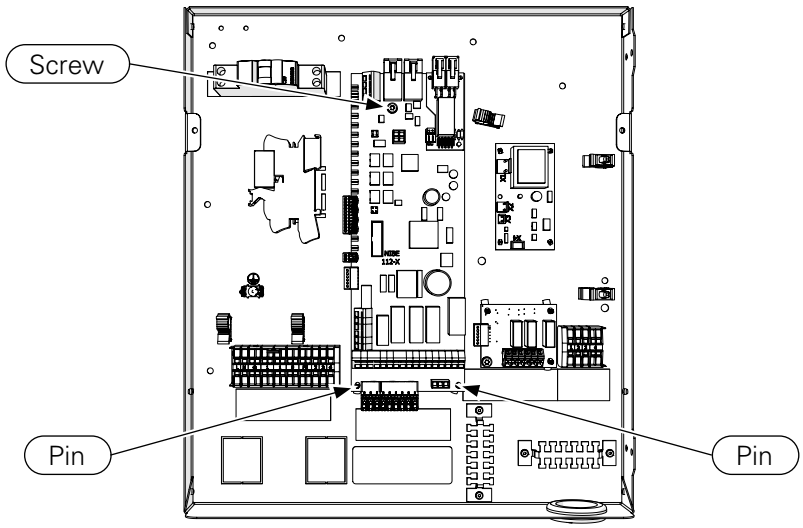
6. Remove the AA2 card.	

Replacement of Input circuit board (AA3)

1. Set the switch (SF2) to “off” mode.	
2. Cut the power supply to BA-SVM 10-200 and EB1.	
3. Remove the front cover using a screwdriver.	
4. Remove the connect cables.	
5. Remove screw and pins.	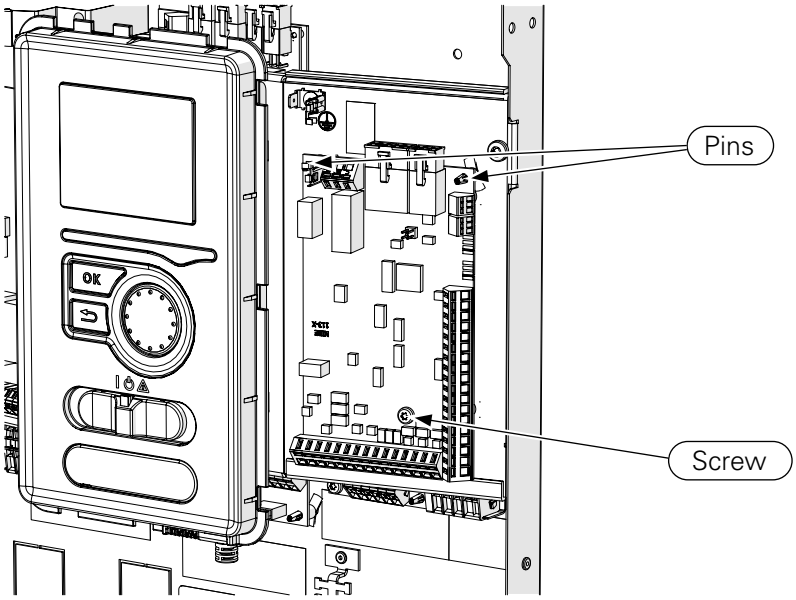
6. Remove the AA3 card.	

Replacement of the display panel (AA4)

1. Set the switch (SF2) to "off" mode.	
2. Cut the power supply to BA-SVM 10-200 and EB1.	
3. Remove the front cover using a screwdriver.	
4. Remove the connect cable.	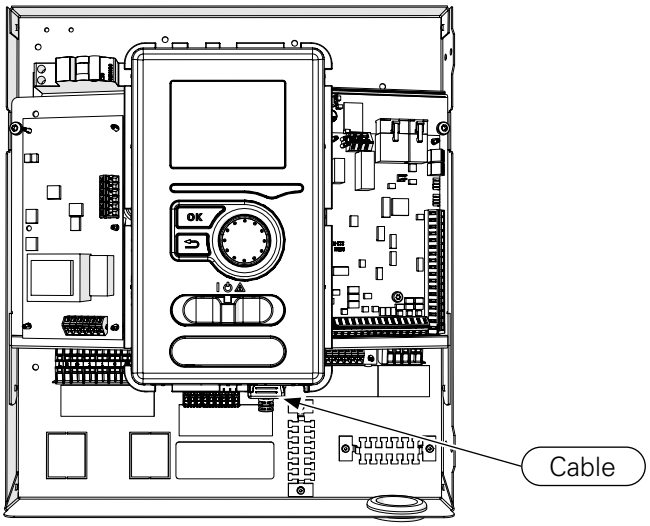
5. Dismantle the control panel. Remove it from the latches by pulling it upwards	

Replacement of Relay board (AA7)

1. Set the switch (SF2) to "off" mode.	
2. Cut the power supply to BA-SVM 10-200 and EB1.	
3. Remove the front cover using a screwdriver.	
4. Remove the control panel wing screws.	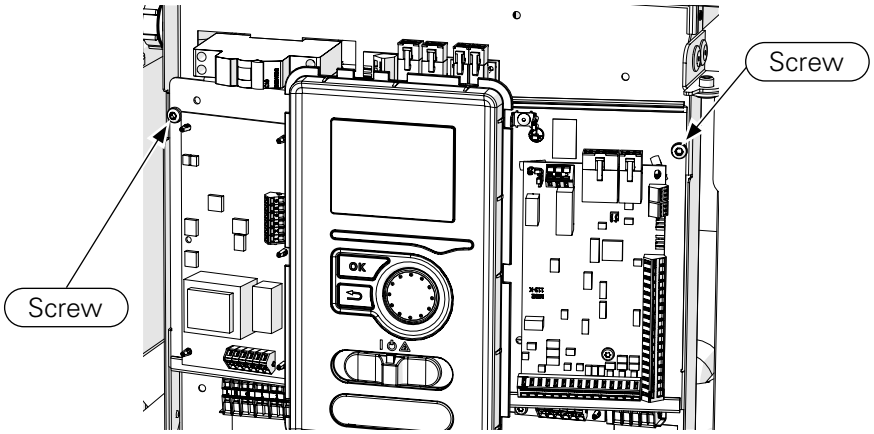
5. Lean the control panel wing downwards.	
4. Remove the connect cables.	
5. Remove the screw and pins.	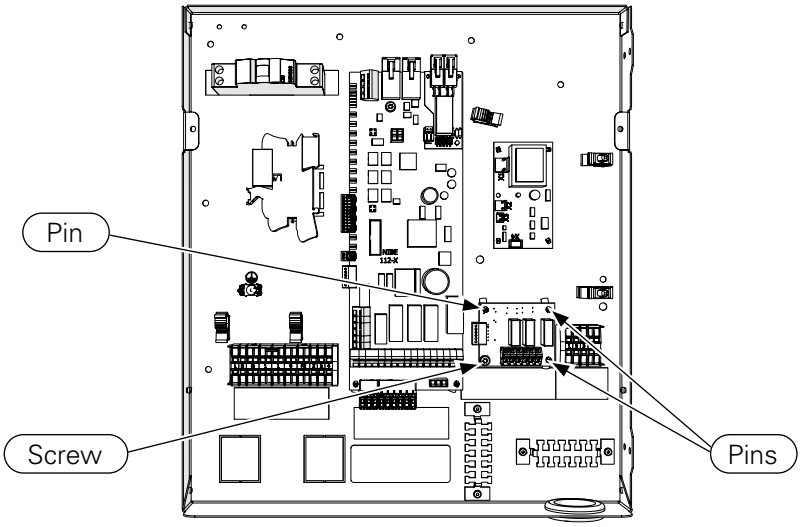
6. Remove the AA7 card.	

Replacement of Titanium anode board (AA8)- BA-SVM 10-200 E and BA-SVM 10-200 E EM ONLY

1. Set the switch (SF2) to "off" mode.	
2. Cut the power supply to BA-SVM 10-200 and EB1.	
3. Remove the front cover using a screwdriver.	
4. Remove the control panel wing screws.	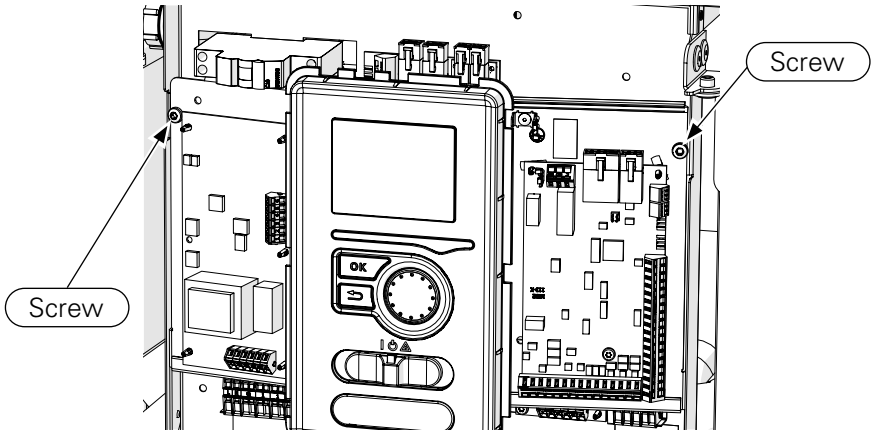
5. Lean the control panel wing downwards.	
4. Remove the connect cables.	
5. Remove the screw and pins.	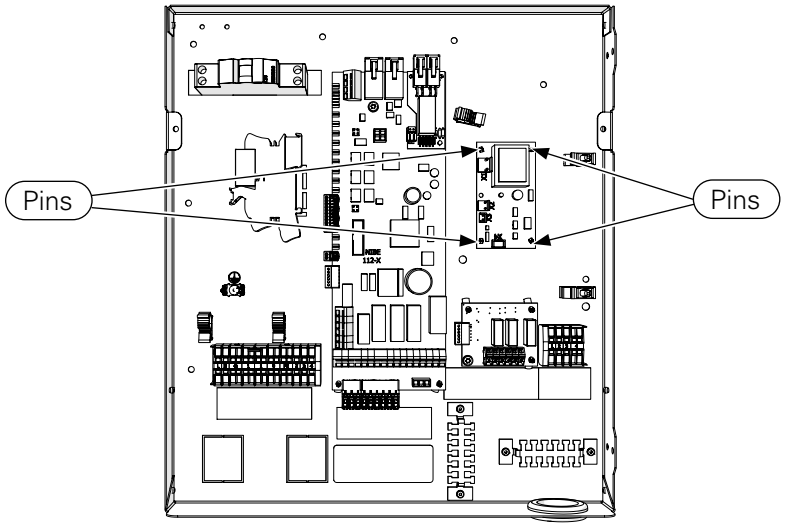
6. Remove the AA8 card.	

Replacement of Communication board (AA23)

1. Set the switch (SF2) to "off" mode.	
2. Cut the power supply to BA-SVM 10-200 and EB1.	
3. Remove the front cover using a screwdriver.	
4. Remove the connect cables.	
5. Remove the pins.	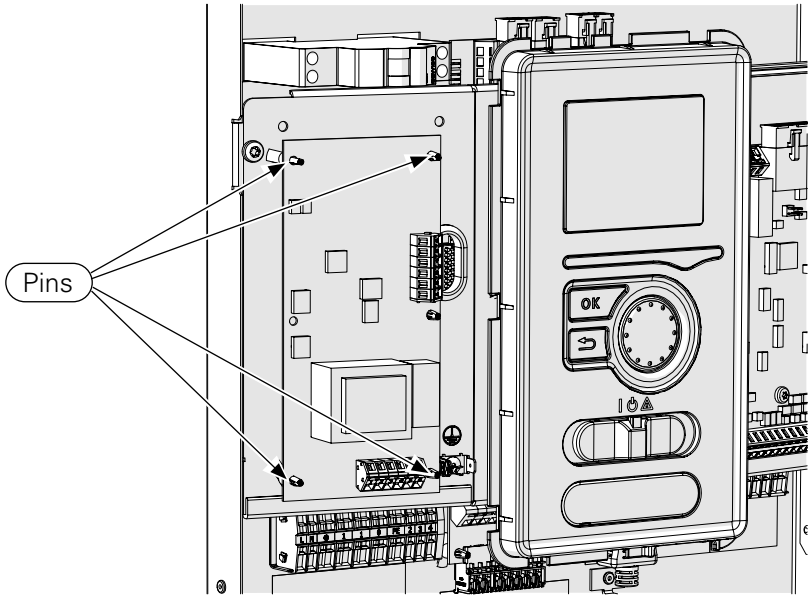
6. Remove the AA23 card.	

Replacement of titanium anode

1. Set the switch (SF2) to "stand by" mode and wait approx. 30 secs	
2. Cut the power supply to BA-SVM 10-200 and EB1.	
3. Close the shut-off valves to the cold and hot water	
4. Remove the water pressure from the tank. This can be done either via the draining valve on the incoming cold water pipe or by inserting a pipe into the cold water connection.	
5. Remove the front cover using a screwdriver.	
6. Remove the mounting screw of the control panel.	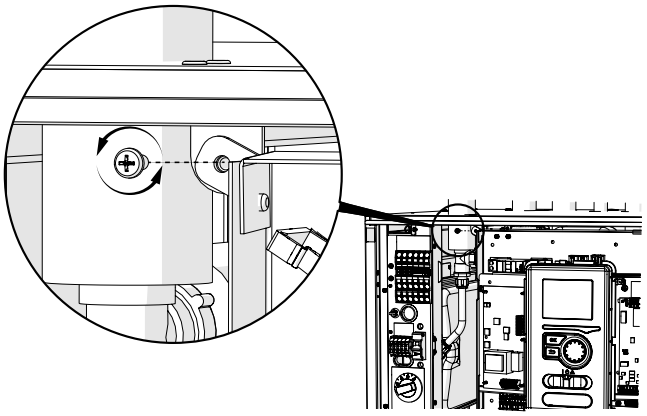
7. Slide the control box to the right to access the hydraulic connections.	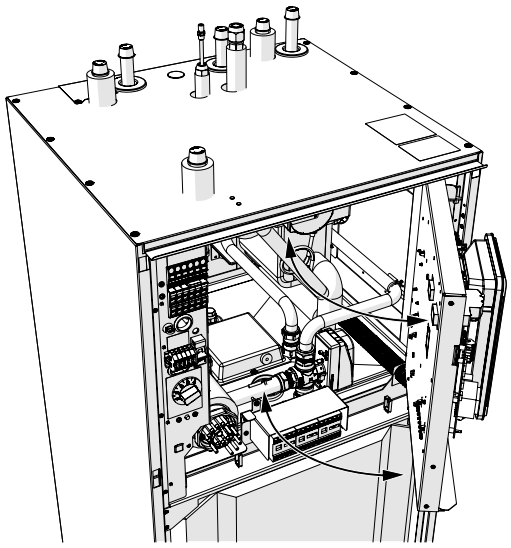

8. Disconnect cable form the titanium anode.	
9 . Unscrew the titanium anode from the tank.	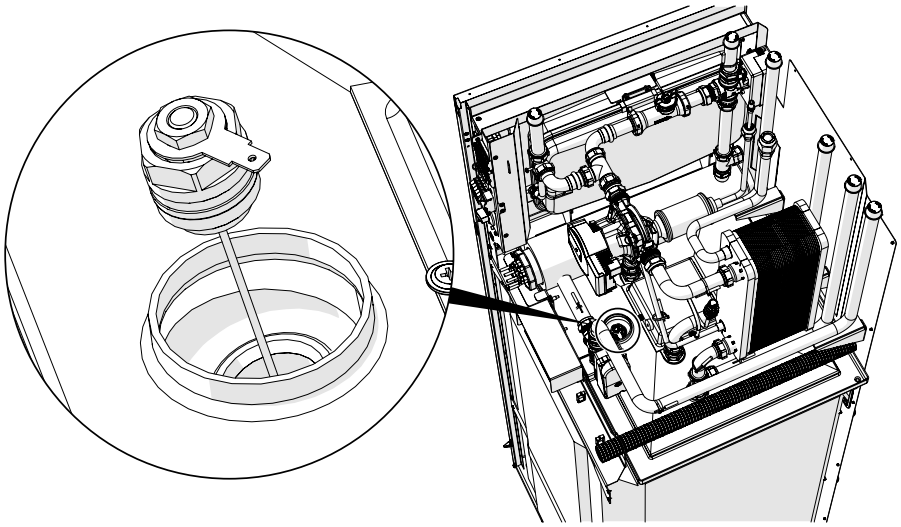
10. Remove the titanium anode.	

9 Technical data

Electrical circuit diagram

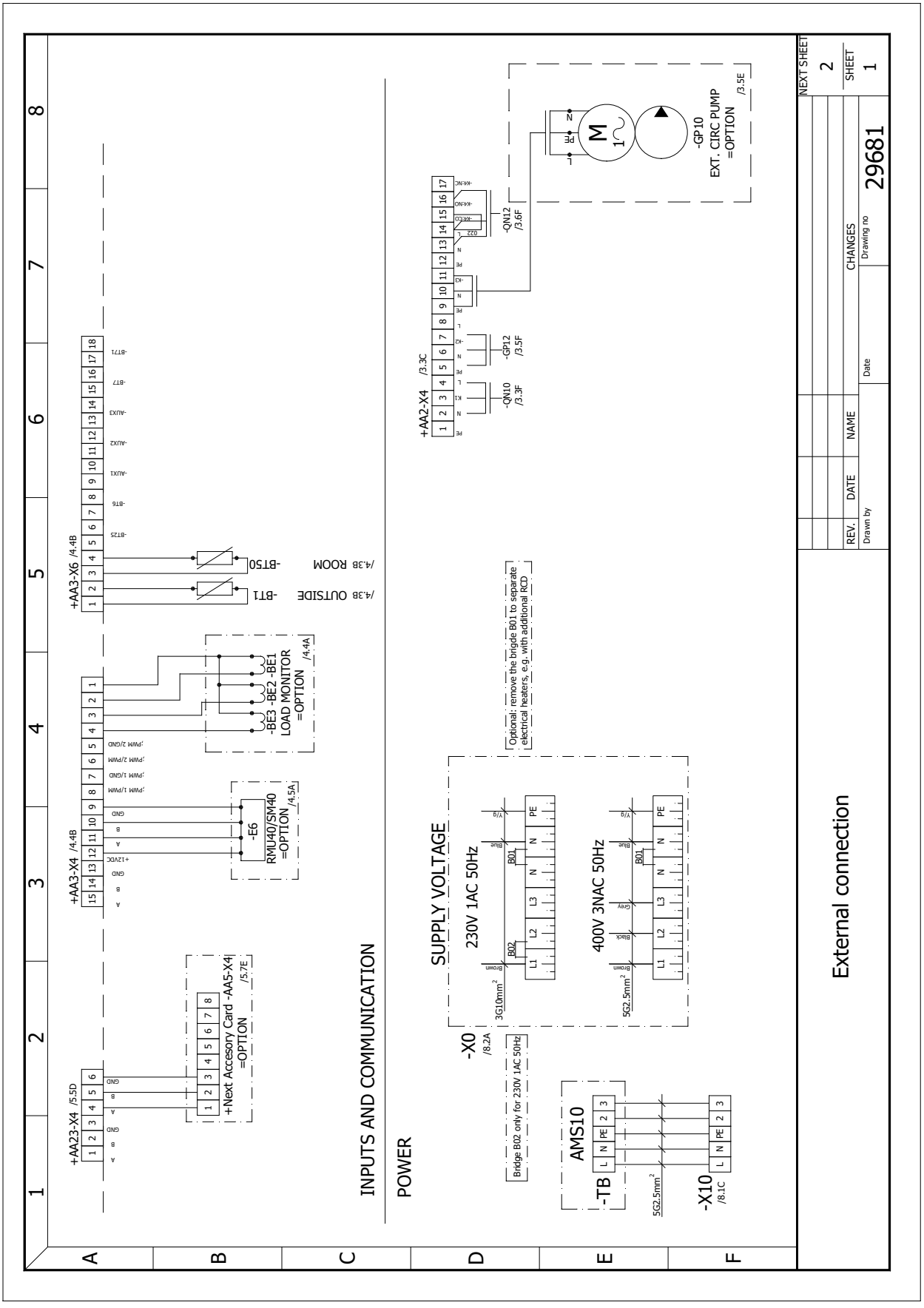

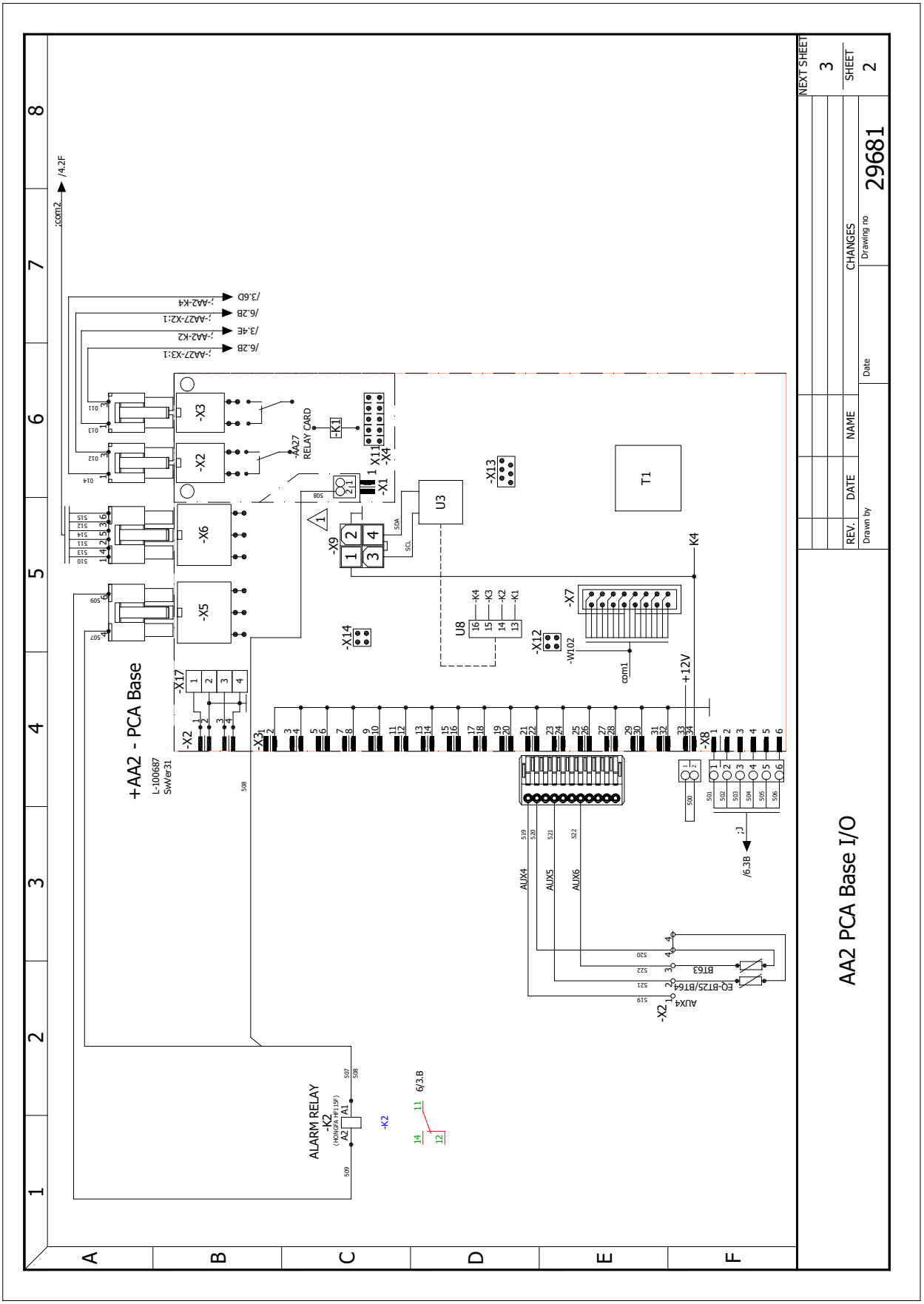
AA2 PCA Base I/O
+AA2 - PCA Base
L-100687
SwVer31
ALARM RELAY
-K2
RELAY CARD
-AA27
T1
U3
U8
-X1
-X2
-X3
-X5
-X6
-X7
-X8
-X9
-X11
-X12
-X13
-X14
-X17
-K1
-K4
-W102
com1
+12V
AUX4
AUX5
AUX6
BT63
EQ-BT25/BT64
NEXT SHEET
3
SHEET
2
REV.
DATE
NAME
CHANGES
Drawing no
29681
Date
Drawn by

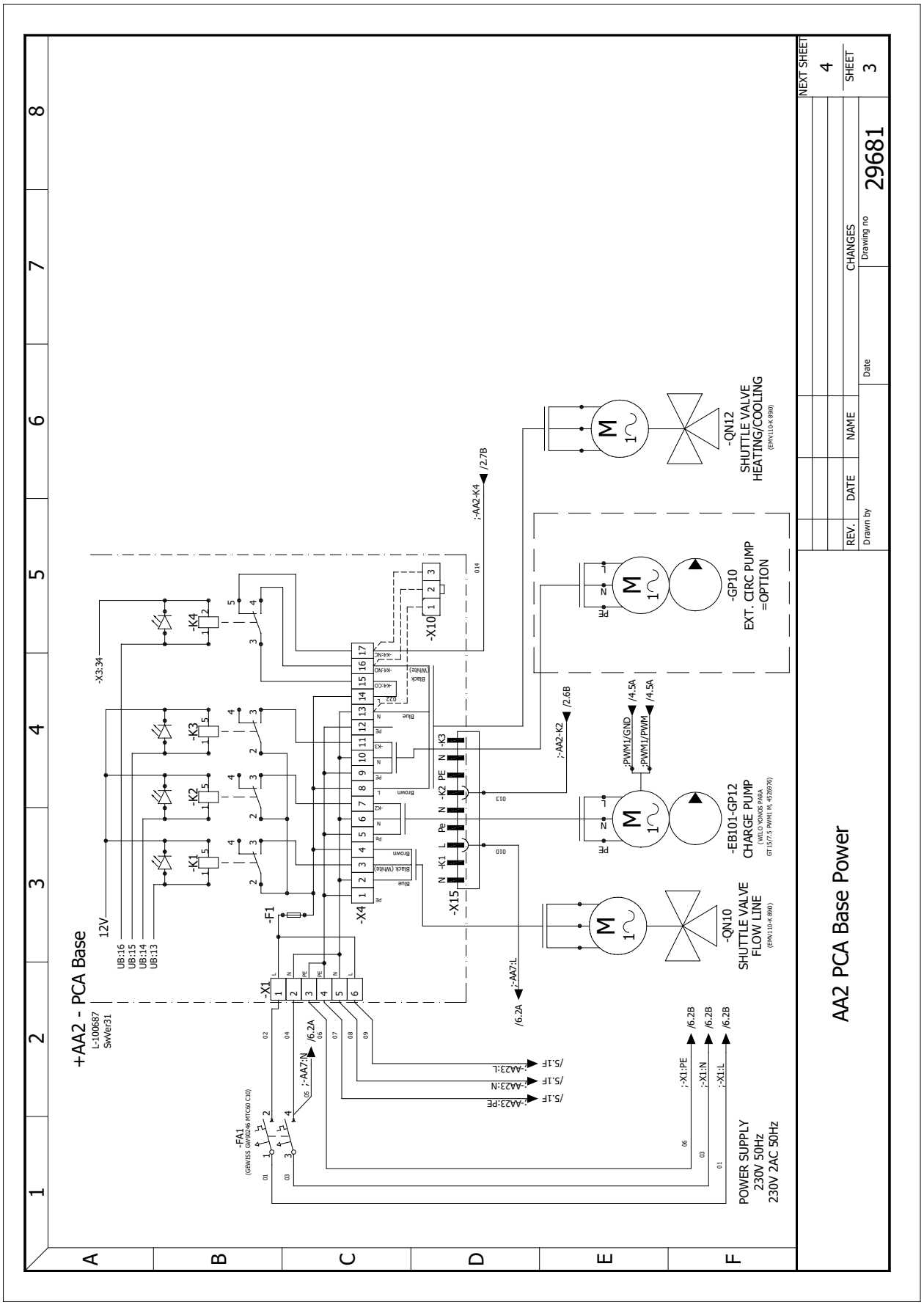
AA2 PCA Base Power
+AA2 - PCA Base
L-100687
SwVer31
POWER SUPPLY
230V 50Hz
230V 2AC 50Hz
-FA1
-EB101-GP12
CHARGE PUMP
-GP10
EXT. CIRC PUMP
=OPTION
-QN12
SHUTTLE VALVE
HEATING/COOLING
-QN10
SHUTTLE VALVE
FLOW LINE
-X1
-X4
-X15
-X10
-K1
-K2
-K3
-K4
-F1
12V
UB:16
UB:15
UB:14
UB:13
-X3:34
;-AA2-K4
;-AA2-K2
;-AA7:L
;-AA7:N
;-PWM1/GND
;-PWM1/PWM
;-X1:PE
;-X1:N
;-X1:L
-AA23:PE
-AA23:N
-AA23:L
NEXT SHEET
SHEET
CHANGES
REV.
DATE
NAME
Date
Drawn by
Drawing no
29681

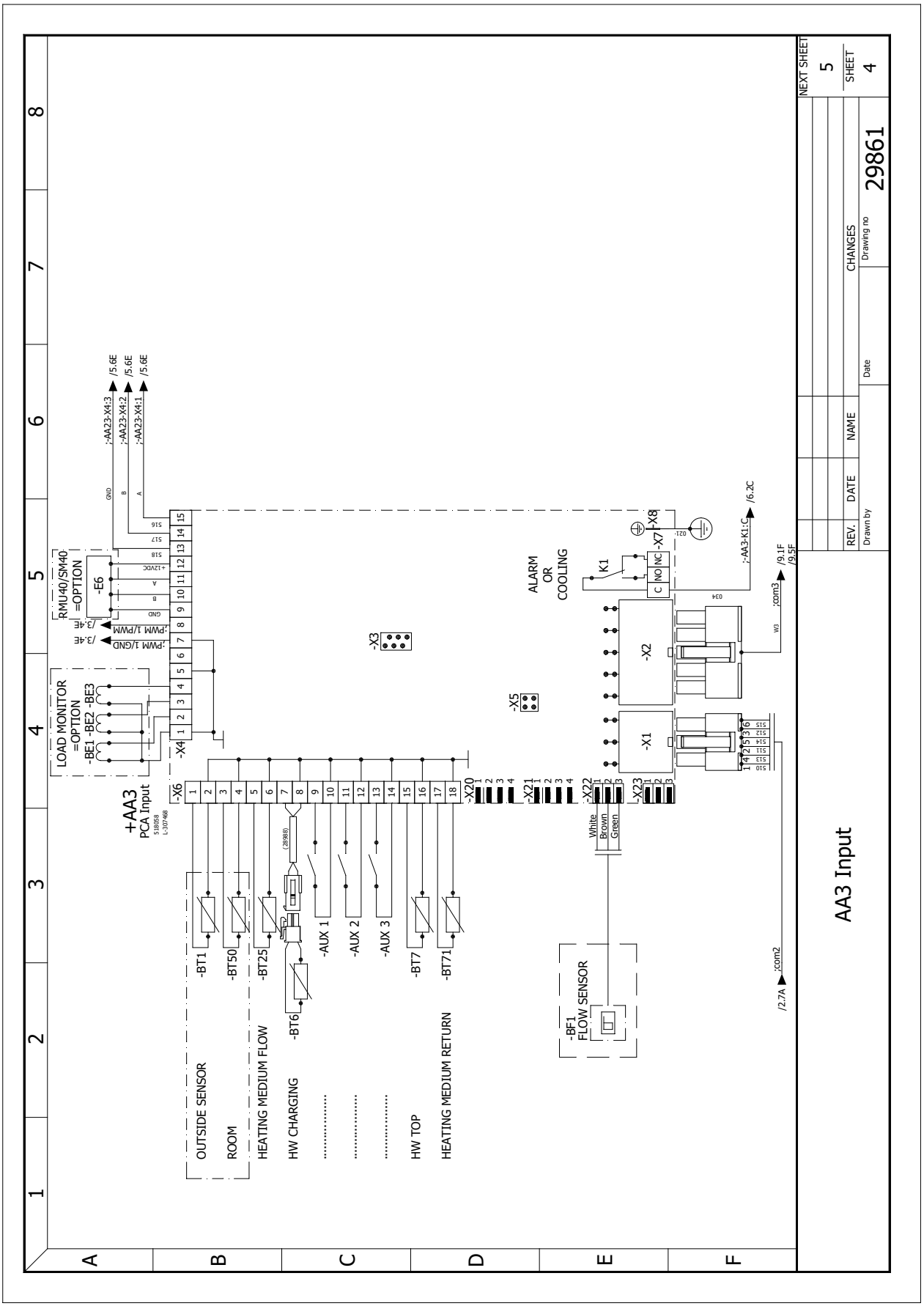
AA3 Input
+AA3
PCA Input
LOAD MONITOR
=OPTION
-BE1 -BE2 -BE3
RMU40/SM40
=OPTION
-E6
-X4
-X6
-X20
-X21
-X22
-X23
-X1
-X2
-X3
-X5
-X7
-X8
K1
ALARM
OR
COOLING
OUTSIDE SENSOR
ROOM
HEATING MEDIUM FLOW
HW CHARGING
HW TOP
HEATING MEDIUM RETURN
-BT1
-BT50
-BT25
-BT6
-BT7
-BT71
-AUX 1
-AUX 2
-AUX 3
-BF1
FLOW SENSOR
White
Brown
Green
;com2
;com3
/2.7A
/9.1F
/9.5F
/6.2C
;-AA3-K1:C
;-AA23-X4:3
;-AA23-X4:2
;-AA23-X4:1
/5.6E
/3.4E
;PWM 1/GND
;PWM 1/PWM
GND
B
A
+12VDC
NEXT SHEET
5
SHEET
4
REV.
DATE
NAME
CHANGES
Date
Drawing no
29861
Drawn by

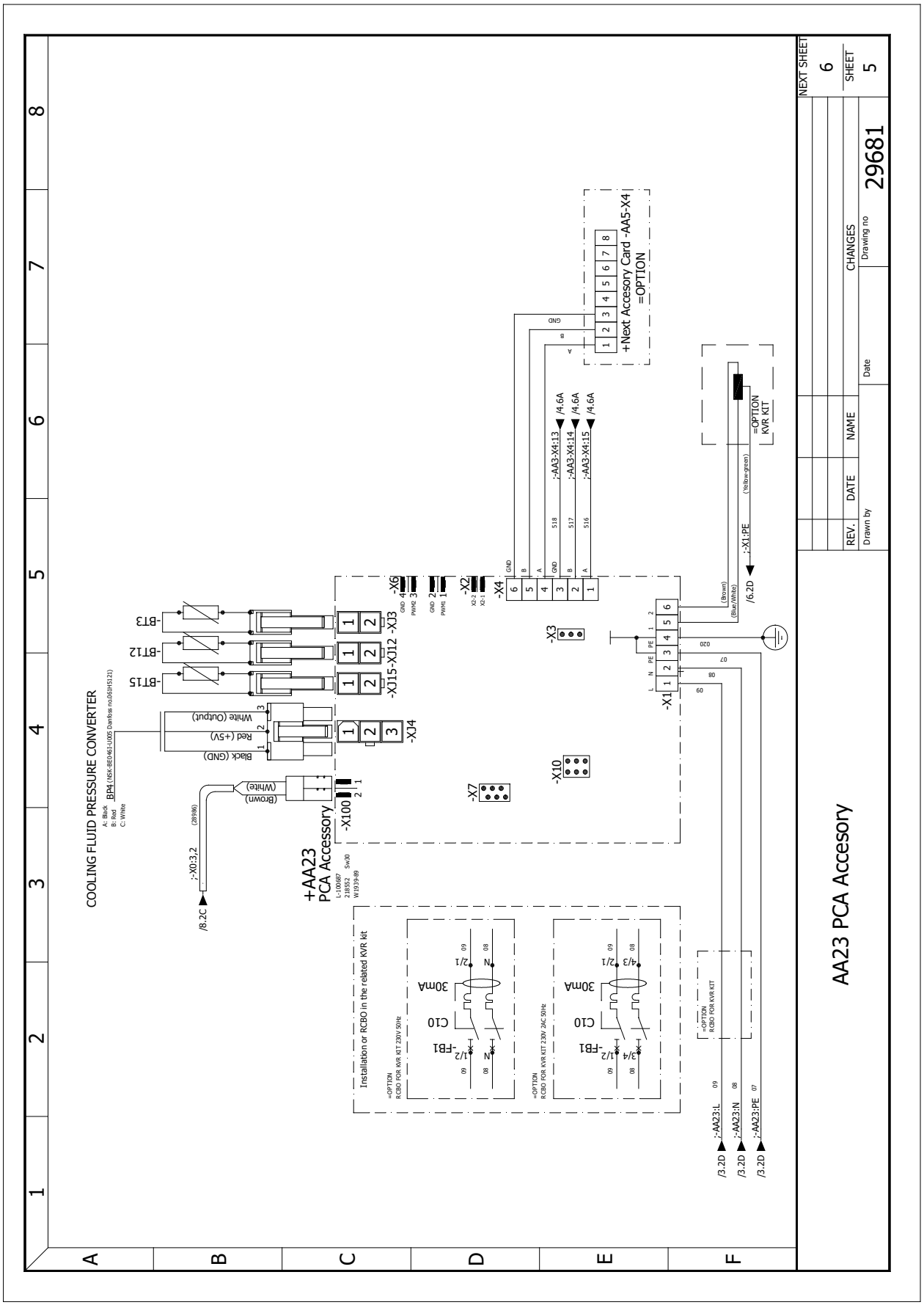
AA23 PCA Accesory
NEXT SHEET 6
SHEET 5
REV. DATE NAME CHANGES
Drawn by Date Drawing no 29681
+AA23
PCA Accessory
L-100687
218552 Sw30
W1939-89
COOLING FLUID PRESSURE CONVERTER
BP4 (NSK-BE0461-U005 Danfoss no.060H5121)
A: Black
B: Red
C: White
Black (GND)
Red (+5V)
White (Output)
-BT15
-BT12
-BT3
-XJ15-XJ12 -XJ3
-XJ4
-X100
-X6
-X2
-X4
-X3
-X10
-X7
-X1
+Next Accesory Card -AA5-X4
=OPTION
;-AA3-X4:13 /4.6A
;-AA3-X4:14 /4.6A
;-AA3-X4:15 /4.6A
=OPTION
KVR KIT
;-X1:PE (Yellow-green)
/6.2D
(Brown)
(Blue/White)
/8.2C
;-X0:3.2 (28986)
Installation or RCBO in the related KVR kit
=OPTION
RCBO FOR KVR KIT 230V 50Hz
-FB1
C10
30mA
=OPTION
RCBO FOR KVR KIT 230V 2AC 50Hz
-FB1
C10
30mA
=OPTION
RCBO FOR KVR KIT
;-AA23:L
;-AA23:N
;-AA23:PE
/3.2D

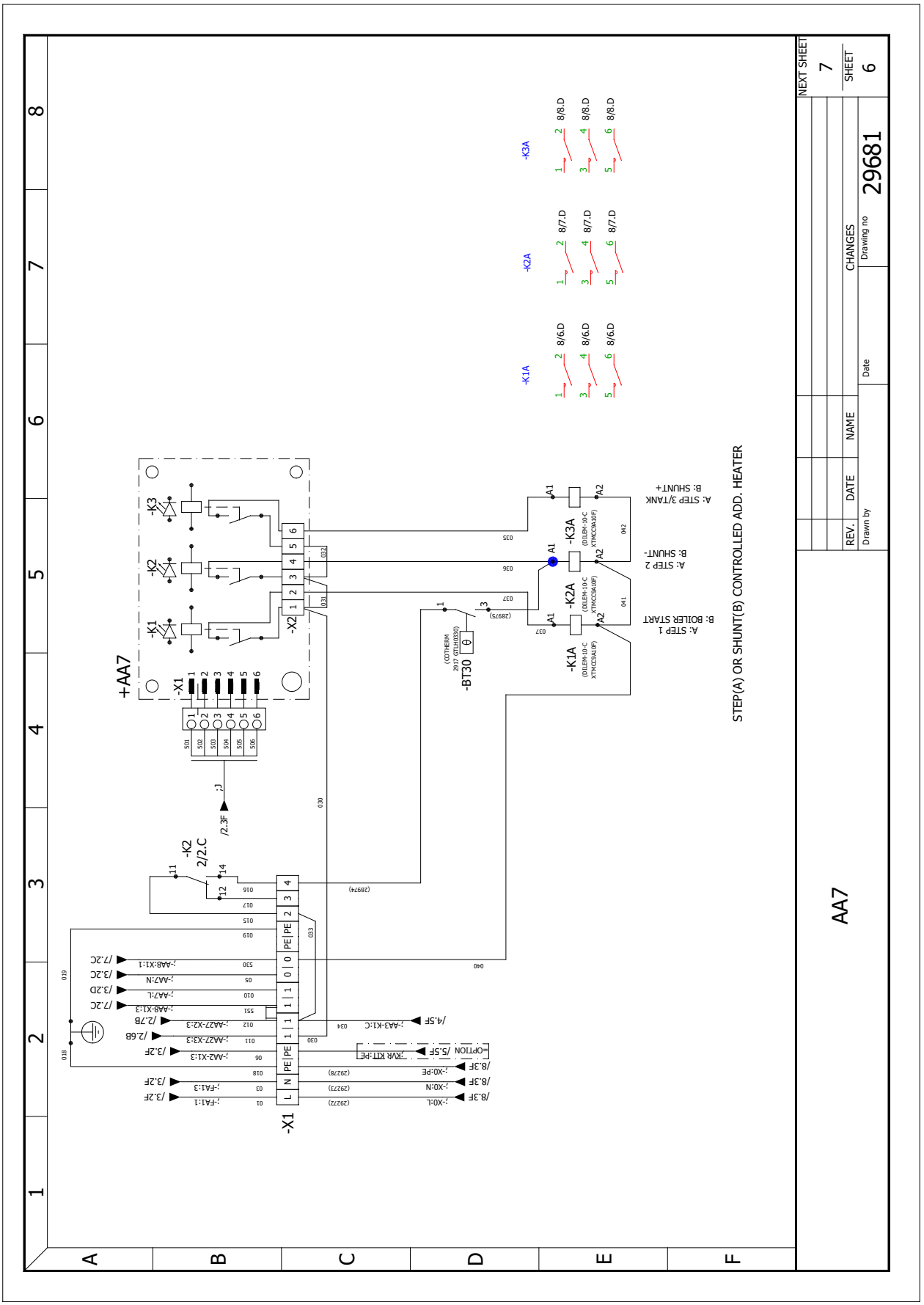
STEP(A) OR SHUNT(B) CONTROLLED ADD. HEATER
AA7
NEXT SHEET
7
SHEET
6
CHANGES
Drawing no
29681
Date
NAME
DATE
REV.
Drawn by
-K1A
-K2A
-K3A
-BT30
-K2
2/2.C
-X1
-X2
+AA7
A: STEP 1
B: BOILER START
A: STEP 2
B: SHUNT-
A: STEP 3/TANK
B: SHUNT+

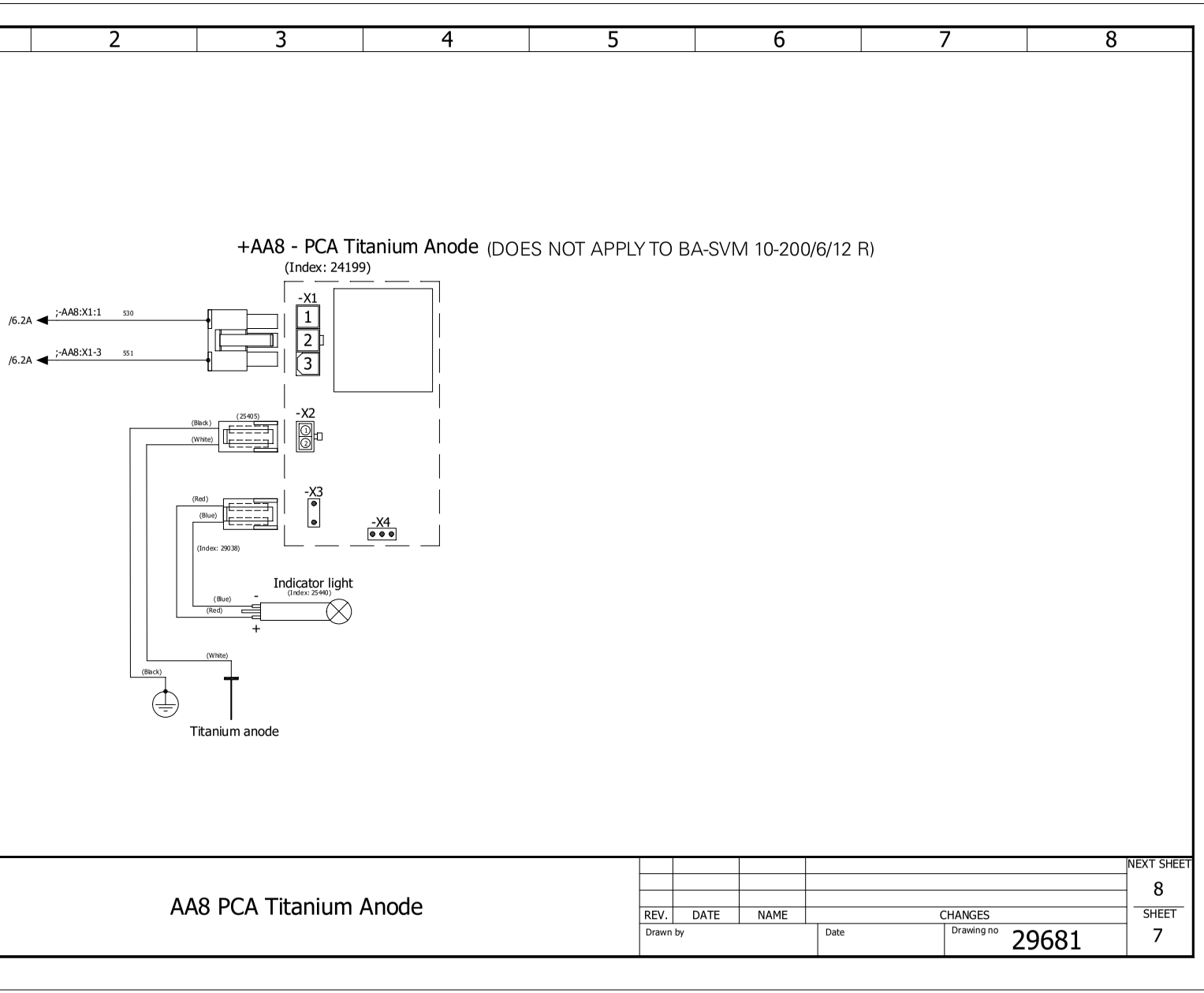
1
2
3
4
5
6
7
8
A
B
C
D
E
F
+AA8 - PCA Titanium Anode (DOES NOT APPLY TO BA-SVM 10-200/6/12 R)
(Index: 24199)
/6.2A
;-AA8:X1:1
530
/6.2A
;-AA8:X1-3
551
-X1
1
2
3
-X2
(Black)
(White)
(25405)
-X3
-X4
(Red)
(Blue)
(Index: 29038)
Indicator light
(Index: 25440)
(Blue)
(Red)
-
+
(White)
(Black)
Titanium anode
AA8 PCA Titanium Anode
NEXT SHEET
8
SHEET
7
REV.
DATE
NAME
CHANGES
Drawn by
Date
Drawing no
29681

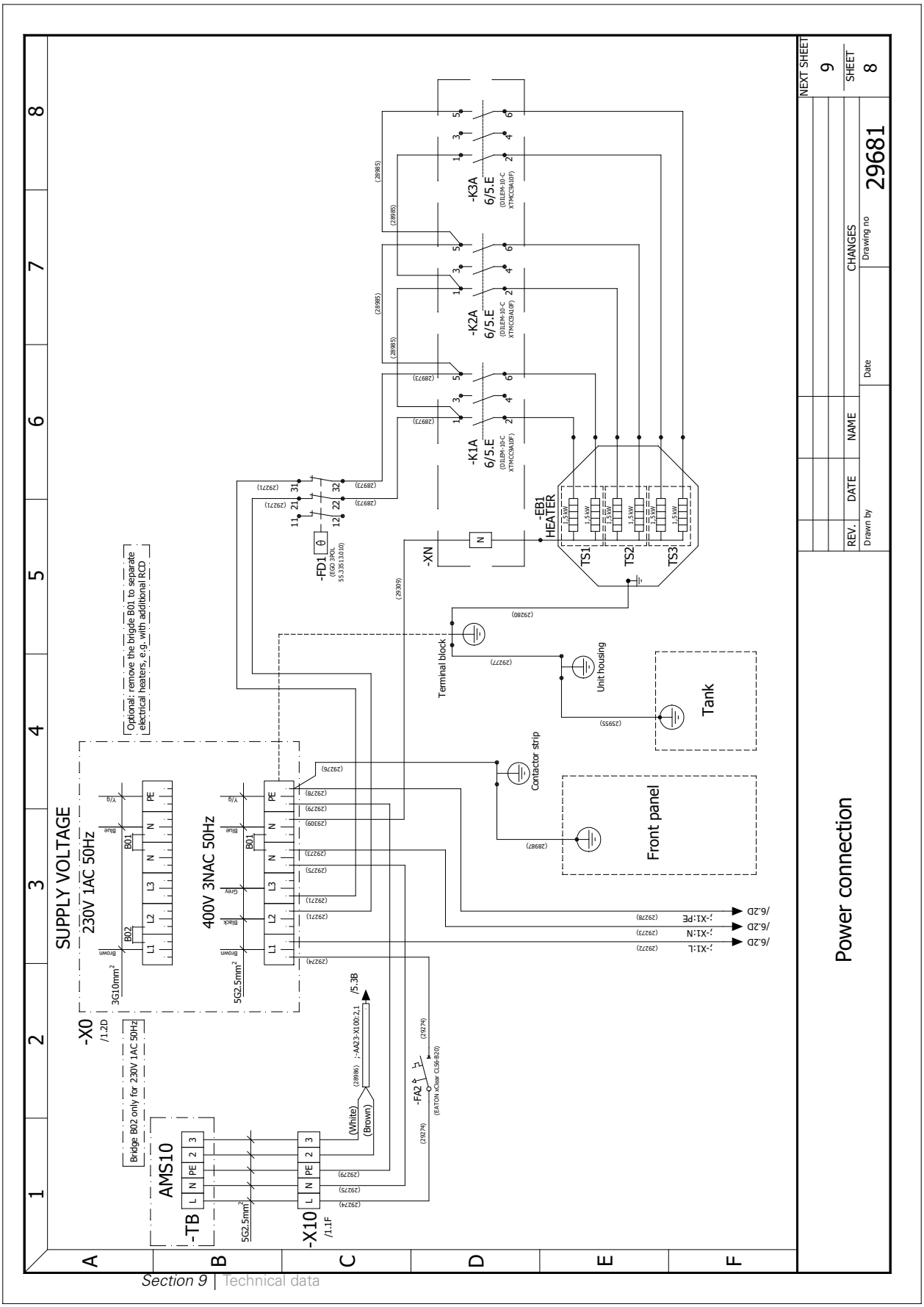
Power connection
SUPPLY VOLTAGE
230V 1AC 50Hz
400V 3NAC 50Hz
Optional: remove the brigde B01 to separate electrical heaters, e.g. with additional RCD
Bridge B02 only for 230V 1AC 50Hz
-X0
/1.2D
-TB
AMS10
-X10
/1.1F
-K1A
-K2A
-K3A
6/5.E
-EB1
HEATER
-XN
-FD1
-FA2
Terminal block
Unit housing
Tank
Front panel
Contactor strip
NEXT SHEET
9
SHEET
8
CHANGES
REV.
DATE
NAME
Date
Drawn by
Drawing no
29681

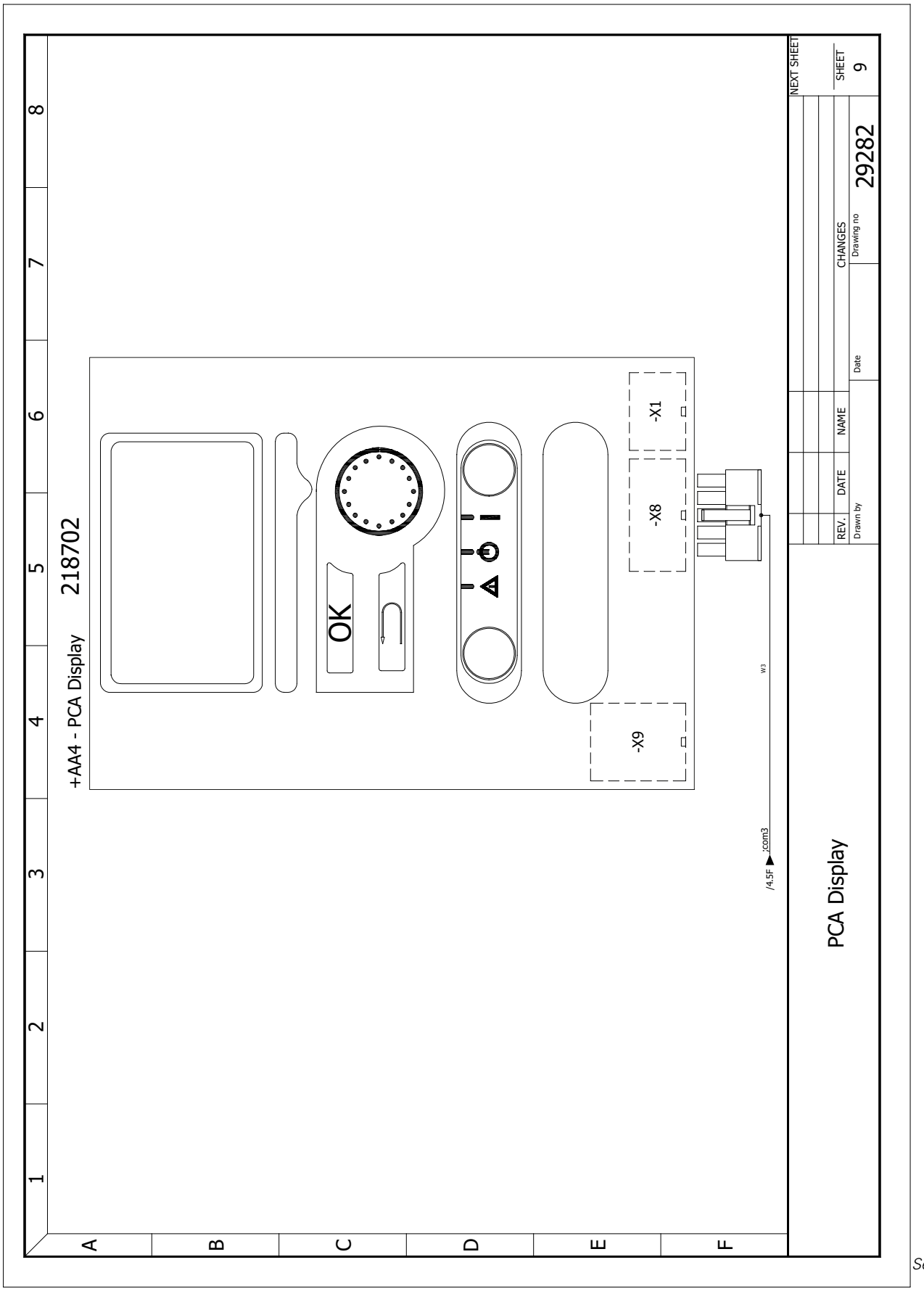

Section 9 | Technical data

NIBE BA-SVM 10-200 *Section 9* | Technical data 85

Dimensions and pipe connections

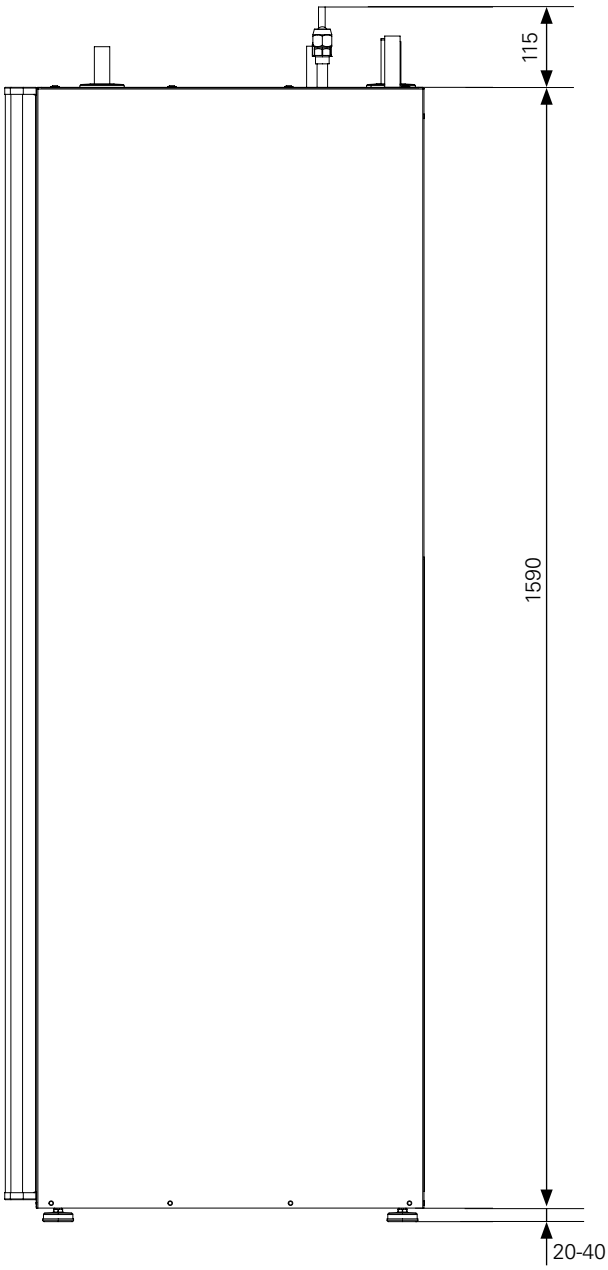

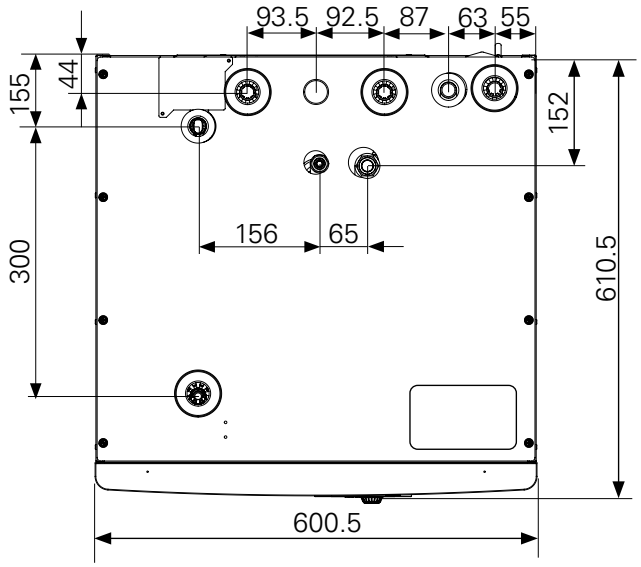

Technical data

Type of product	*Unit*	*BA-SVM 10-200/6 E/EM/R*	*BA-SVM 10-200/12 E/EM/R*
Height	mm	1590	
Required ceiling height	mm	2100	
Width	mm	600	
Depth	mm	610	
Weight	kg	161 (124 - ONLY BA-SVM 10-200/6 R)	165 (128 - ONLY BA-SVM 10-200/12 R)
Maximum operating pressure of central heating system.	bar	3	
Maximum hot water pressure	bar	10	
Hot water tank volume	l	180	
Maximum operating temperature of central heating	°C	65	
Maximum hot water temperature	°C	65	
Low-energy circulation pump clim. sys.	-	Yes	
Safety valve. climate system	-	Yes, in the safety assembly	
Expansion vessel	l	10	
Additional heat	kW	4.5 (230V) / 9 (400V)	
Rated voltage	V	1x230 / 3x400	
Hot water tank corrosion protection	-	Enamel + titanium anode (E, E EM) / Stainless Steel (R)	
Maximum hot water capacity in accordance with EN16147	-	230 litres. 40°C	
Energy class (in accordance with ErP. at supply temp. 55°C) applies to package AMS 10-12 + BA-SVM 10-200/12 and AMS 10-6 + BA-SVM 10-200/6	-	A++	
Efficiency class / Load profile (hot water)	-	A/XL	

Max. operating current and recommended fuse rating for 3x400 V connection	*Unit*	*BA-SVM 10-200/6 E/EM/R + AMS 10-6*	*BA-SVM 10-200/12 E/EM/R + AMS 10-8*	*BA-SVM 10-200/12 E/EM/R + AMS 10-12*
Max. operating current, compressor	A	16	16	20
Max. operating current of heat pump including 3 kW immersion heater, compressor running and contactor K1 connected (recommended fuse rating)	A	16 (16)	16 (16)	20 (20)
Max. operating current of heat pump including 6 kW immersion heater, compressor running and contactor K1+K2 connected (recommended fuse rating)	A	16 (16)	16 (16)	20 (20)
Max. operating current of heat pump including 9 kW immersion heater, compressor running and contactor K1+K2+K3 connected (recommended fuse rating)	A	20 (20)	20 (20)	20 (20)
Max. operating current of 9 kW immersion heater, contactor K1+K2+K3 connected, compressor not running (recommended fuse rating)	A	20 (20)	20 (20)	20 (20)

Max. operating current and recommended fuse rating for 1x230 V connection	*Unit*	*BA-SVM 10-200/6 E/EM/R + AMS 10-6*	*BA-SVM 10-200/12 E/EM/R + AMS 10-8*	*BA-SVM 10-200/12 E/EM/R + AMS 10-12*
Max. operating current. compressor	A	16	16	20
Max. operating current of heat pump including 1.5 kW immersion heater. compressor running and contactor K1 connected (recommended fuse rating)	A	22.5 (25)	22.5 (25)	26.5 (25)
Max. operating current of heat pump including 3 kW immersion heater. compressor running and contactor K1+K2 connected (recommended fuse rating)	A	29 (32)	29 (32)	33 (32)
Max. operating current of heat pump including 4.5 kW immersion heater. compressor running and contactor K1+K2+K3 connected (recommended fuse rating)	A	35.5 (32)	35.5 (32)	39.5 (40)
Max. operating current of 4.5 kW immersion heater. contactor K1+K2+K3 connected. compressor not running (recommended fuse rating)	A	19.5 (20)	19.5 (20)	19.5 (20)

10 Item Register

Item register

A

Accessibility, electrical connection 61
Alarm list 48

C

Cable lock 61
Circuit board and electronics 69
Component description 41
  Components 41
  Electronics 46
  Sensors 45
Component replacement 61, 89
  Cable lock 61
  Circuit board and electronics 69
  Main components 62
  Removing the covers 61
Components 41
Current circuit 40
  Load monitor 40

D

Dimensions and pipe connections 86

E

Electrical circuit diagram 77
Electronics 46

F

Function check, components 60

I

Important information 4
  Marking 4
  Safety information 4
  Serial number 4
  Symbols 4

L

Load monitor 40

M

Main components 62
Marking 4

P

Principle of operation 8

R

Removing the covers 61

S

Sensors 45
Serial number 4
Symbols 4
System description 8
  Principle of operation 8

T

Technical data 77, 87
  Dimensions and pipe connections 86
  Electrical circuit diagram 77
  Technical data 87
Troubleshooting 48
  Alarm list 48
  Function check, components 60
  Troubleshooting guide 55
Troubleshooting guide 55

NIBE-BIAWAR Sp. z o.o.
15-703 Białystok, al. Jana Pawła II 57
tel. 85 662 84 90, fax 85 662 84 09
e-mail: sekretariat@biawar.com.pl

SERWIS I DORADZTWO TECHNICZNE:
tel. 85 662 84 41, 85 662 84 87
serwis.nibe@biawar.com.pl
INFOLINIA: 801 003 066

www.nibe.pl